Online data sheet



ISD300-1311

ISD300

OPTICAL DATA TRANSMISSION

SICK
Sensor Intelligence.



Ordering information

Type	Part no.
ISD300-1311	6028213

Other models and accessories → www.sick.com/ISD300

Detailed technical data

Performance

Transmission range	0.2 m ... 300 m
Light source	LED, infrared (880 nm)
Typ. light spot size (distance)	1.75 m (at 100 m)
Aperture angle	Ca. ± 0.5°

Interfaces

Data transmission rate	1.5 Mbit/s
Switching output	0 V ... 2 V: interference-free operation V_S –2 V: reduced system reserve
Data interface	RS-485/PROFIBUS DP [1]
Switching input	0 V ... 2 V: sender deactivated
Signal delay	≤ 1.5 µs, + 1 Tbit

[1] RS-485 on request.

Mechanics/electronics

Supply voltage V_S	DC 18 V ... 30 V
Housing material	Metal
Connection type	Terminals
Weight	Approx. 1.2 kg
Current consumption	≤ 0.2 A
Frequency	F1 [1]

[1] A pair of devices with numbers ending in 1 and 2 are required to create a data transfer section.

Ambient data

Enclosure rating	IP 65
Protection class	I
Electromagnetic compatibility (EMC)	EN 61000-6-2 / EN 61000-6-4 [1]
Ambient temperature	Storage: –30 °C ... +70 °C

[1] This is a Class A device. This device can cause radio interference in living quarters.

Ambient temperature operation	–5 °C ... +50 °C
Max. rel. humidity (not condensing)	90 %, Non-condensing

[1] This is a Class A device. This device can cause radio interference in living quarters.

Dimensional drawing (Dimensions in mm (inch))

ISD300 RS-485/PROFIBUS, ISD300 RS-422/Interbus, ISD300 DH+/RIO, ISD300 DeviceNet/CANopen

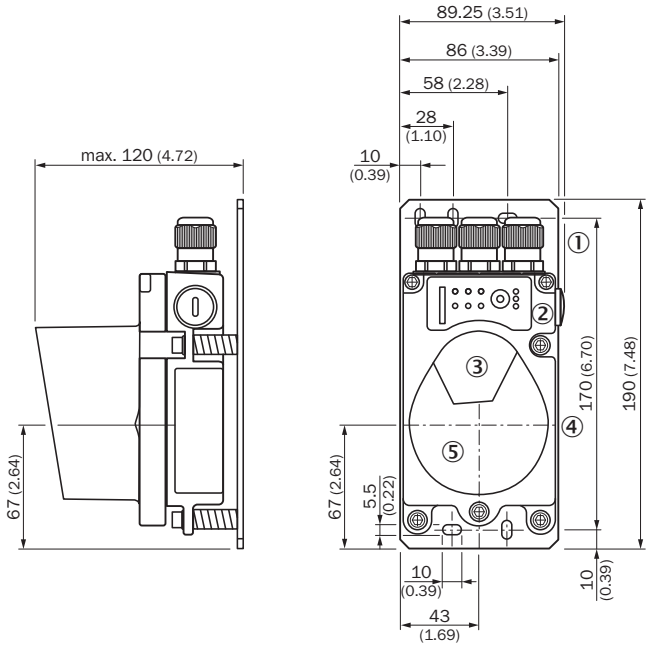

① M16 gland
② Control panel
③ Sender lens
④ Center of optical axis
⑤ Receiver lens

Connection type

ISD300 RS-485/PROFIBUS

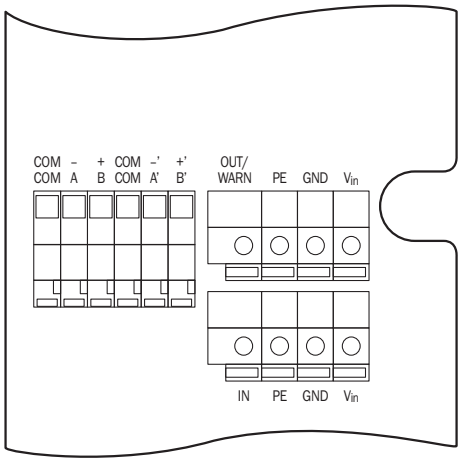

Connection diagram

Terminals, general	
V_{in}	L+
GND	M
PE	Shield
OUT/WARN	Q
IN	Switch. input

Terminals, PROFIBUS	
A, –	A wire
B, +	B wire
COM	Pot. balance
A', –'	A wire
B', +'	B wire

Adjustment possible

ISD300 RS-485/PROFIBUS, ISD300 RS-422/Interbus, ISD300 DH+/RIO, ISD300 DeviceNet/CANopen

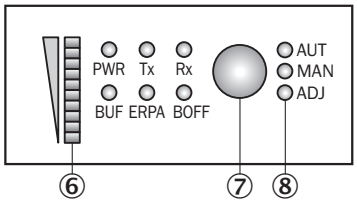

⑥ Display for signal level
⑦ Operating mode selector switch
⑧ LED operating indicator

Recommended accessories

Other models and accessories ➜ www.sick.com/ISD300

	Brief description	Type	Part no.
Plug connectors and cables			
	Head A: cable Head B: cable Cable: PROFIBUS DP, drag chain use, PUR, shielded	LTG-2102-MW	6021355
	Head A: cable Head B: cable Cable: CANopen, DeviceNet, drag chain use, shielded Wire shield Al-Pt film, overall shield C-screen tin-plated	LTG-2804-MW	6028328
	Head A: male connector, M12, 5-pin, straight, B-coded Head B: cable Cable: PROFIBUS DP, drag chain use, PUR, halogen-free, shielded, 5 m Wire shield Al-Pt film, overall shield C-screen tin-plated	STL-1205-G05MQ	6026005
	Head A: female connector, M12, 5-pin, straight Cable: CANopen, DeviceNet, shielded	DOS-1205-GA	6027534
	Head A: female connector, M12, 5-pin, straight, B-coded Head B: - Cable: PROFIBUS DP, shielded	DOS-1205-GQ	6021353

	Brief description	Type	Part no.
	Head A: male connector, M12, 5-pin, straight, A-coded Cable: CANopen, DeviceNet, shielded	STE-1205-GA	6027533
	Head A: male connector, M12, 5-pin, straight, B-coded Head B: - Cable: PROFIBUS DP, shielded	STE-1205-GQ	6021354

SICK AT A GLANCE

SICK is one of the leading manufacturers of intelligent sensors and sensor solutions for industrial applications. A unique range of products and services creates the perfect basis for controlling processes securely and efficiently, protecting individuals from accidents and preventing damage to the environment.

We have extensive experience in a wide range of industries and understand their processes and requirements. With intelligent sensors, we can deliver exactly what our customers need. In application centers in Europe, Asia and North America, system solutions are tested and optimized in accordance with customer specifications. All this makes us a reliable supplier and development partner.

Comprehensive services complete our offering: SICK LifeTime Services provide support throughout the machine life cycle and ensure safety and productivity.

For us, that is “Sensor Intelligence.”

WORLDWIDE PRESENCE:

Contacts and other locations –www.sick.com