ISC03 Series

DC-DC Converter

XP Power

3 Watt

- Regulated Single & Dual Output
- Wide 4:1 Input Range
- Compact SMD Package
- 1500 VDC Isolation
- Operating Temperature -40 °C to +100 °C
- Remote On/Off
- Tape & Reel Package Available
- Optional Water Washable Versions
- 3 Year Warranty



Dimensions:

ISC:
0.94 x 0.71 x 0.32" (24.00 x 18.10 x 8.25 mm)

Models & Ratings

Input Voltage	Output Voltage	Output Current		Input Current[1,2]		Maximum Capacitive Load[3]	Efficiency	Model Number[4]
		Min	Max	No Load	Full Load			
9-36 V	3.3 V	90 mA	600 mA	30 mA	110 mA	220 µF	75%	ISC0324S3V3
	5.0 V	90 mA	600 mA	30 mA	160 mA	220 µF	78%	ISC0324S05
	12.0 V	38 mA	250 mA	30 mA	156 mA	47 µF	80%	ISC0324S12
	15.0 V	30 mA	200 mA	30 mA	156 mA	47 µF	80%	ISC0324S15
	24.0 V	19 mA	125 mA	30 mA	156 mA	47 µF	80%	ISC0324S24
	±5.0 V	±45mA	±300 mA	30 mA	162 mA	±47 µF	77%	ISC0324D05
	±12.0 V	±19 mA	±125 mA	30 mA	156 mA	±47 µF	80%	ISC0324D12
	±15.0 V	±15 mA	±100 mA	30 mA	156 mA	±47 µF	80%	ISC0324D15
18-75 V	3.3 V	90 mA	600 mA	20 mA	55 mA	220 µF	75%	ISC0348S3V3
	5.0 V	90 mA	600 mA	20 mA	80 mA	220 µF	78%	ISC0348S05
	12.0 V	38 mA	250 mA	20 mA	78 mA	47 µF	80%	ISC0348S12
	15.0 V	30 mA	200 mA	20 mA	78 mA	47 µF	80%	ISC0348S15
	24.0 V	19 mA	125 mA	20 mA	78 mA	47 µF	80%	ISC0348S24
	±5.0 V	±45mA	±300 mA	20 mA	81 mA	±47 µF	77%	ISC0348D05
	±12.0 V	±19 mA	±125 mA	20 mA	78 mA	±47 µF	80%	ISC0348D12
	±15.0 V	±15 mA	±100 mA	20 mA	78 mA	±47 µF	80%	ISC0348D15

Notes

1. Input currents measured at nominal input voltage.
2. Input current is typically 5 mA at nominal input voltage when output is remotely turned off.
3. Maximum capacitive load is per output.
4. For optional water washable version, add suffix '-P' e.g. ISC0324S12-P.

Mechanical Details

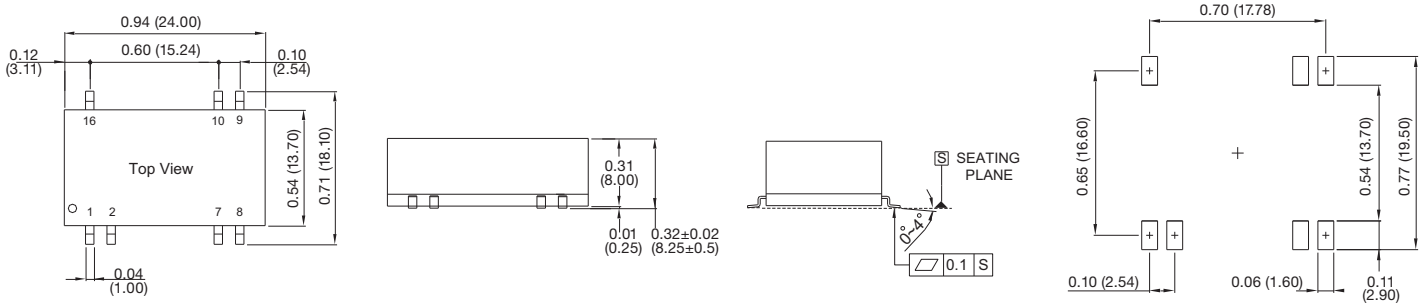

Input

Characteristic	Minimum	Typical	Maximum	Units	Notes & Conditions
Input Voltage Range	9		36	VDC	24 V nominal
	18		75	VDC	48 V nominal
Input Filter	Pi type				
Input Reflected Ripple		20		mA pk-pk	Through 12 µH inductor and 47 µF capacitor
Input Surge			50	VDC for 1 s	24 V models
			100	VDC for 1 s	48 V models
Undervoltage Lockout	ON at >4.5 V, OFF at <8 V				24 V models
	ON at >8.5 V, OFF at <16 V				48 V models
Remote On/Off	ON: Logic high (2.5 - 5.5 V) or open circuit OFF: Logic low (<0.8 V) or short pin 1 to pin 2				

Output

Characteristic	Minimum	Typical	Maximum	Units	Notes & Conditions
Output Voltage	3.3		30	VDC	See Models and Ratings table
Initial Set Accuracy			±2	%	
Output Voltage Balance		±1.0	±2.0	%	For dual output with balanced laods
Minimum Load	15			%	See Models and Ratings table
Line Regulation		±0.5	±1.0	%	
Load Regulation		±0.5	±1.2	%	15% to 100%
Cross Regulation			±5	%	On dual output models when one load is varied between 25% and 100% and other is fixed at 100%
Transient Response		3		% deviation	Recovery within 1% in less than 600 µs for a 25% load change.
Ripple & Noise			100	mV pk-pk	20 MHz bandwidth. Measured using 0.47 µF ceramic capacitor.
Overload Protection	110	150		%	Foldback
Short Circuit Protection					Continuous, with auto recovery
Maximum Capacitive Load					See Models and Ratings table
Temperature Coefficient			0.02	%/°C	

General

Characteristic	Minimum	Typical	Maximum	Units	Notes & Conditions
Efficiency		80		%	See Models and Ratings table
Isolation: Input to Output	1500/1800			VDC	60 s/1 s
Isolation Resistance	10^9			Ω	At 500 VDC
Isolation Capacitance		350	500	pF	
Switching Frequency		350		kHz	
Power Density			7.5	W/in³	
Mean Time Between Failure		300		kHrs	MIL-HDBK-217F, +25 °C GB
Weight		0.01 (4.2)		lb (g)	
Moisture Sensitivity Level	Level 2				IPC/JEDEC J-STD-020D.1

Environmental

Characteristic	Minimum	Typical	Maximum	Units	Notes & Conditions
Operating Temperature	-40		+100	°C	See Derating Curve.
Storage Temperature	-50		+125	°C	
Case Temperature			+105	°C	
Humidity			95	%RH	Non-condensing
Cooling					Natural convection
Case Flammability	UL 94V-0 Rated				Non conductive black plastic
Lead-Free Reflow Solder Process					IPC/JEDEC J-STD-020D.1

Safety Approvals

Safety Agency	Safety Standard	Notes & Conditions
CB	IEC60950-1	ITE
UL	UL/cUL60950-1	ITE

EMC: Emissions

Phenomenon	Standard	Test Level	Notes & Conditions
Conducted	EN55022	Class A	

Mechanical Details

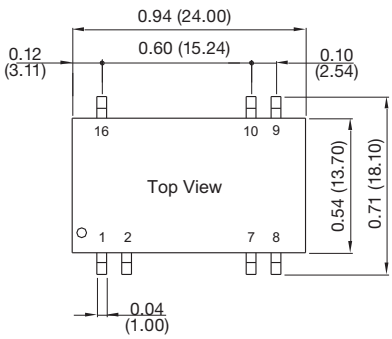

Connecting Pin Pattern

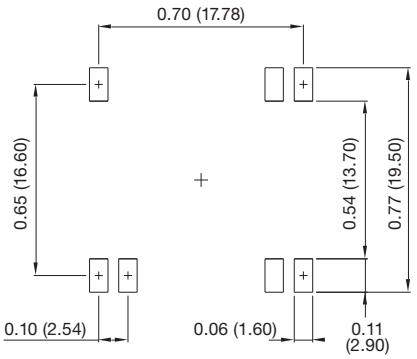

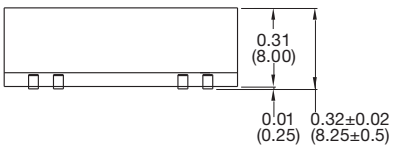

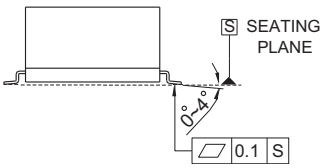

Pin Connections		
Pin	Single	Dual
1	-Vin	-Vin
2	Remote On/Off	Remote On/Off
7	No Connection	No Connection
8	No Connection	Common
9	+Vout	+Vout
10	-Vout	-Vout
16	+Vin	+Vin

Application Notes

Derating Curve

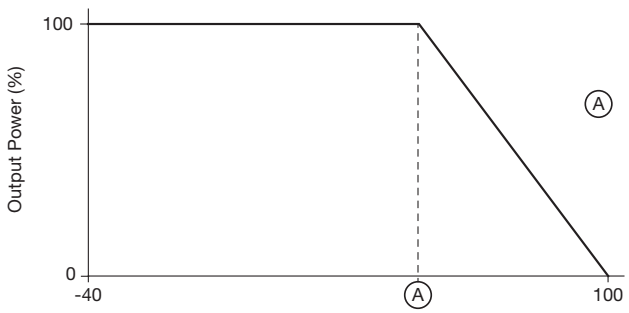

(A) 55 °C for ISC03xxS3V3 & S05
60 °C for all other models

Notes

1. All dimensions are in inches (mm)
2. Weight: 0.01 lbs (4.2 g) approx.
3. Tolerance: X.XX±0.01 (X.X±0.25)
   X.XXX±0.005 (X.XX±0.13)
4. Pin Tolerance: ±0.002 (±0.05)