IS62WV6416ALL
IS62WV6416BLL

64K x 16 LOW VOLTAGE, ULTRA LOW POWER CMOS STATIC RAM

JANUARY 2008

FEATURES

- High-speed access time: 45ns, 55ns
- CMOS low power operation:

  30 mW (typical) operating

  15 µW (typical) CMOS standby
- TTL compatible interface levels
- Single power supply

  1.7V--2.2V V_{DD} (62WV6416ALL)

  2.5V--3.6V V_{DD} (62WV6416BLL)
- Fully static operation: no clock or refresh required
- Three state outputs
- Data control for upper and lower bytes
- Industrial temperature available
- 2CS Option Available
- Lead-free available

DESCRIPTION

The *ISSI* IS62WV6416ALL/ IS62WV6416BLL are high-speed, 1M bit static RAMs organized as 64K words by 16 bits. It is fabricated using *ISSI*'s high-performance CMOS technology. This highly reliable process coupled with innovative circuit design techniques, yields high-performance and low power consumption devices.

When $\overline{CS1}$ is HIGH (deselected) or when CS2 is LOW (deselected) or when $\overline{CS1}$ is LOW, CS2 is HIGH and both $\overline{LB}$ and $\overline{UB}$ are HIGH, the device assumes a standby mode at which the power dissipation can be reduced down with CMOS input levels.

Easy memory expansion is provided by using Chip Enable and Output Enable inputs. The active LOW Write Enable ($\overline{WE}$) controls both writing and reading of the memory. A data byte allows Upper Byte ($\overline{UB}$) and Lower Byte ($\overline{LB}$) access.

The IS62WV6416ALL and IS62WV6416BLL are packaged in the JEDEC standard 48-pin mini BGA (6mm x 8mm) and 44-Pin TSOP (TYPE II).

FUNCTIONAL BLOCK DIAGRAM

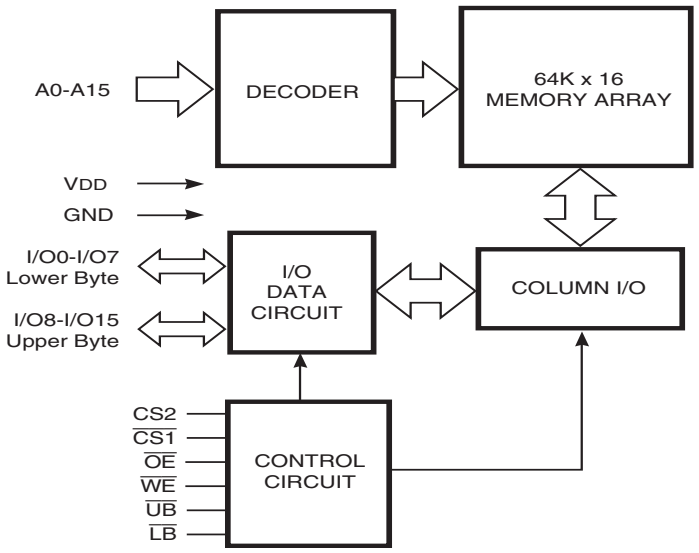

Copyright © 2008 Integrated Silicon Solution, Inc. All rights reserved. ISSI reserves the right to make changes to this specification and its products at any time without notice. ISSI assumes no liability arising out of the application or use of any information, products or services described herein. Customers are advised to obtain the latest version of this device specification before relying on any published information and before placing orders for products.

PIN CONFIGURATIONS

48-Pin mini BGA (6mm x 8mm) (Package Code B)

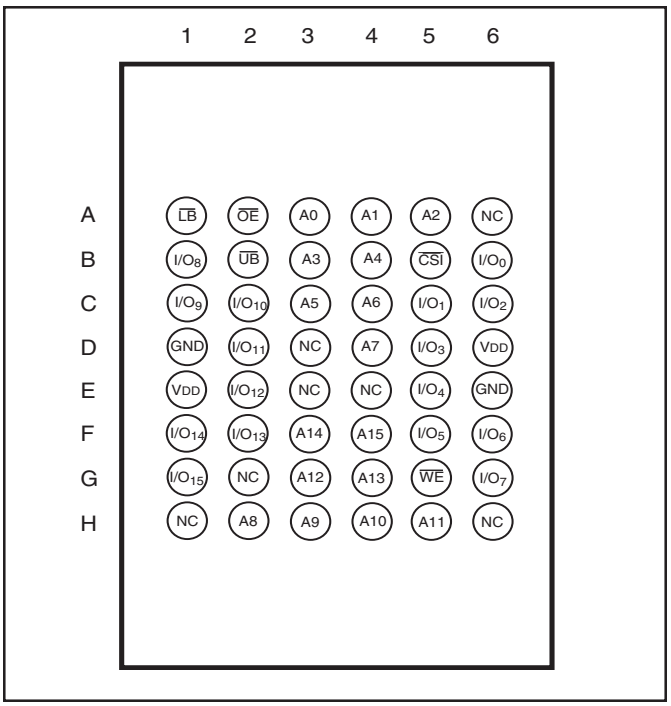

48-Pin mini BGA (6mm x 8mm) 2 CS Option (Package Code B2)

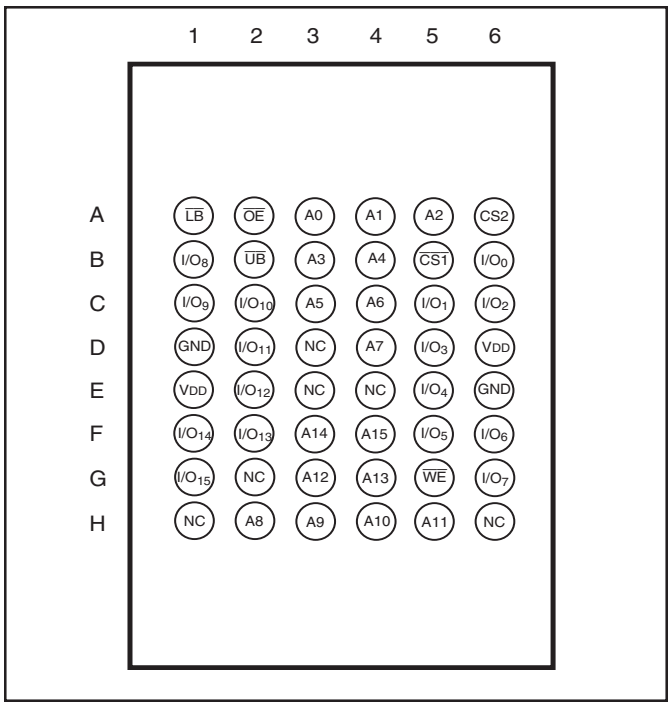

PIN DESCRIPTIONS

A0-A15	Address Inputs
I/O0-I/O15	Data Inputs/Outputs
$\overline{CS1}$, CS2	Chip Enable Input
$\overline{OE}$	Output Enable Input
$\overline{WE}$	Write Enable Input
$\overline{LB}$	Lower-byte Control (I/O0-I/O7)
$\overline{UB}$	Upper-byte Control (I/O8-I/O15)
NC	No Connection
VDD	Power
GND	Ground

44-Pin mini TSOP (Type II) (Package Code T)

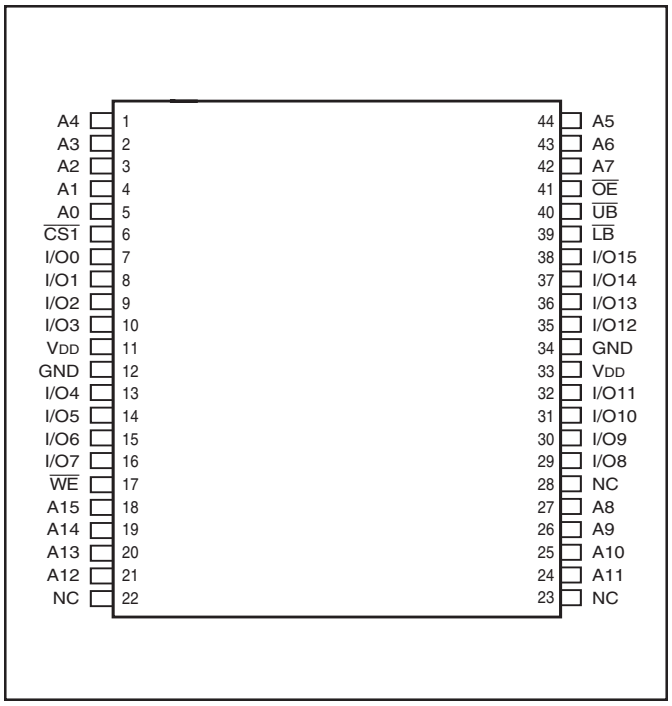

TRUTH TABLE

Mode	$\overline{WE}$	$\overline{CS1}$	CS2	$\overline{OE}$	$\overline{LB}$	$\overline{UB}$	I/O PIN I/O0-I/O7	I/O PIN I/O8-I/O15	V_{DD} Current
Not Selected	X	H	X	X	X	X	High-Z	High-Z	I_{SB1}, I_{SB2}
	X	X	L	X	X	X	High-Z	High-Z	I_{SB1}, I_{SB2}
	X	X	X	X	H	H	High-Z	High-Z	I_{SB1}, I_{SB2}
Output Disabled	H	L	H	H	L	X	High-Z	High-Z	I_{CC}
	H	L	H	H	X	L	High-Z	High-Z	I_{CC}
Read	H	L	H	L	L	H	D_{OUT}	High-Z	I_{CC}
	H	L	H	L	H	L	High-Z	D_{OUT}	
	H	L	H	L	L	L	D_{OUT}	D_{OUT}	
Write	L	L	H	X	L	H	D_{IN}	High-Z	I_{CC}
	L	L	H	X	H	L	High-Z	D_{IN}	
	L	L	H	X	L	L	D_{IN}	D_{IN}	

OPERATING RANGE (V_{DD})

Range	Ambient Temperature	IS62WV6416ALL	IS62WV6416BLL
Commercial	0°C to +70°C	1.7V - 2.2V	2.5V - 3.6V
Industrial	–40°C to +85°C	1.7V - 2.2V	2.5V - 3.6V

ABSOLUTE MAXIMUM RATINGS[1]

Symbol	Parameter	Value	Unit
V_{TERM}	Terminal Voltage with Respect to GND	–0.2 to V_{DD}+0.3	V
V_{DD}	V_{DD} Related to GND	–0.2 to +3.8	V
T_{STG}	Storage Temperature	–65 to +150	°C
P_T	Power Dissipation	1.0	W

Note:
1. Stress greater than those listed under ABSOLUTE MAXIMUM RATINGS may cause permanent damage to the device. This is a stress rating only and functional operation of the device at these or any other conditions above those indicated in the operational sections of this specification is not implied. Exposure to absolute maximum rating conditions for extended periods may affect reliability.

DC ELECTRICAL CHARACTERISTICS (Over Operating Range)

Symbol	Parameter	Test Conditions	V_{DD}	Min.	Max.	Unit
V_{OH}	Output HIGH Voltage	I_{OH} = -0.1 mA	1.7-2.2V	1.4	—	V
		I_{OH} = -1 mA	2.5-3.6V	2.2	—	V
V_{OL}	Output LOW Voltage	I_{OL} = 0.1 mA	1.7-2.2V	—	0.2	V
		I_{OL} = 2.1 mA	2.5-3.6V	—	0.4	V
V_{IH}	Input HIGH Voltage		1.7-2.2V	1.4	V_{DD} + 0.2	V
			2.5-3.6V	2.2	V_{DD} + 0.3	V
V_{IL}(1)	Input LOW Voltage		1.7-2.2V	–0.2	0.4	V
			2.5-3.6V	–0.2	0.6	V
I_{LI}	Input Leakage	GND ≤ V_{IN} ≤ V_{DD}		–1	1	µA
I_{LO}	Output Leakage	GND ≤ V_{OUT} ≤ V_{DD}, Outputs Disabled		–1	1	µA

Notes:
1. V_{IL} (min.) = –1.0V for pulse width less than 10 ns.

CAPACITANCE(1)

Symbol	Parameter	Conditions	Max.	Unit
C_{IN}	Input Capacitance	V_{IN} = 0V	8	pF
C_{OUT}	Input/Output Capacitance	V_{OUT} = 0V	10	pF

Note:
1. Tested initially and after any design or process changes that may affect these parameters.

AC TEST CONDITIONS

Parameter	62WV6416ALL (Unit)	62WV6416BLL (Unit)
Input Pulse Level	0.4V to V_{DD}-0.2V	0.4V to V_{DD}-0.3V
Input Rise and Fall Times	5 ns	5ns
Input and Output Timing and Reference Level	V_{REF}	V_{REF}
Output Load	See Figures 1 and 2	See Figures 1 and 2

AC TEST LOADS

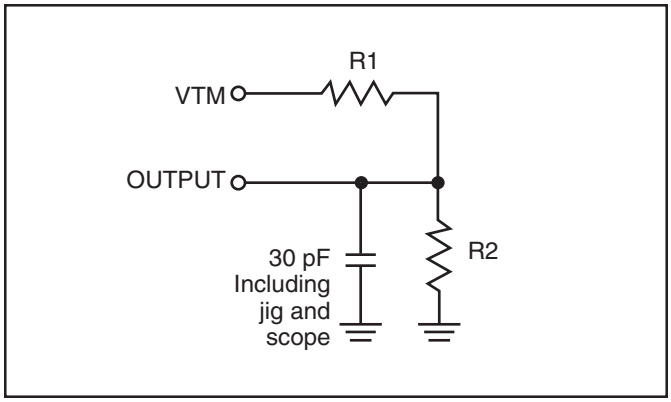

Figure 1

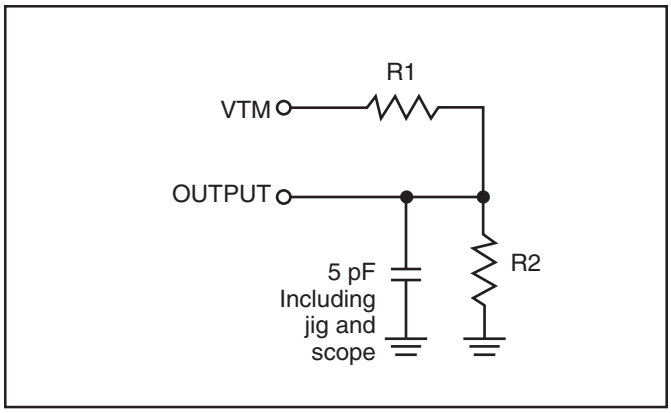

Figure 2

	1.7-2.2V	2.5V - 3.6V
R1(Ω)	3070	3070
R2(Ω)	3150	3150
V_{REF}	0.9V	1.5V
V_{TM}	1.8V	2.8V

IS62WV6416ALL, POWER SUPPLY CHARACTERISTICS[1] (Over Operating Range)

Symbol	Parameter	Test Conditions		Max. 55	Unit
I_{CC}	V_{DD} Dynamic Operating Supply Current	V_{DD} = Max., I_{OUT} = 0 mA, f = f_{MAX}	Com.	10	mA
			Ind.	10	
			typ.[1]	6	
I_{CC1}	Operating Supply Current	V_{DD} = Max., I_{OUT} = 0 mA, f = 0	Com.	5	mA
			Ind.	5	
I_{SB1}	TTL Standby Current (TTL Inputs)	V_{DD} = Max., V_{IN} = V_{IH} or V_{IL} $\overline{CS1}$ = V_{IH}, CS2 = V_{IL}, f = 1 MHz	Com.	1.2	mA
			Ind.	1.2	
			OR		
	ULB Control	V_{DD} = Max., V_{IN} = V_{IH} or V_{IL} $\overline{CS1}$ = V_{IL}, f = 0, $\overline{UB}$ = V_{IH}, $\overline{LB}$ = V_{IH}			
I_{SB2}	CMOS Standby Current (CMOS Inputs)	V_{DD} = Max., $\overline{CS1} \geq V_{DD} - 0.2V$, CS2 $\leq$ 0.2V, $V_{IN} \geq V_{DD} - 0.2V$, or $V_{IN} \leq 0.2V$, f = 0	Com.	10	µA
			Ind.	10	
			typ.[1]	4	
			OR		
	ULB Control	V_{DD} = Max., $\overline{CS1}$ = V_{IL}, CS2 = V_{IH} $V_{IN} \leq 0.2V$, f = 0; $\overline{UB}$/$\overline{LB}$ = $V_{DD} - 0.2V$			

Note:
1. Typical values are measured at V_{DD}=1.8V, T_A=25°C. Not 100% tested.

IS62WV6416BLL, POWER SUPPLY CHARACTERISTICS[1] (Over Operating Range)

Symbol	Parameter	Test Conditions		Max. 45	Max. 55	Unit
I_{CC}	V_{DD} Dynamic Operating Supply Current	V_{DD} = Max., I_{OUT} = 0 mA, f = f_{MAX}	Com.	17	15	mA
			Ind.	17	15	
			typ.[2]	12	10	
I_{CC1}	Operating Supply Current	V_{DD} = Max., I_{OUT} = 0 mA, f = 0	Com.	5	5	mA
			Ind.	5	5	
I_{SB1}	TTL Standby Current (TTL Inputs)	V_{DD} = Max., V_{IN} = V_{IH} or V_{IL} $\overline{CS1}$ = V_{IH}, CS2 = V_{IL}, f = 1 MHz	Com.	1.2	1.2	mA
			Ind.	1.2	1.2	
	OR					
	ULB Control	V_{DD} = Max., V_{IN} = V_{IH} or V_{IL} $\overline{CS1}$ = V_{IL}, f = 0, $\overline{UB}$ = V_{IH}, $\overline{LB}$ = V_{IH}				
I_{SB2}	CMOS Standby Current (CMOS Inputs)	V_{DD} = Max., $\overline{CS1} \geq V_{DD} - 0.2V$, CS2 $\leq$ 0.2V, $V_{IN} \geq V_{DD} - 0.2V$, or $V_{IN} \leq 0.2V$, f = 0	Com.	15	15	µA
			Ind.	15	15	
			typ.[2]	5	5	
	OR					
	ULB Control	V_{DD} = Max., $\overline{CS1}$ = V_{IL}, CS2 = V_{IH} $V_{IN} \leq 0.2V$, f = 0; $\overline{UB}$/$\overline{LB}$ = $V_{DD} - 0.2V$				

Note:
1. At f = f_{MAX}, address and data inputs are cycling at the maximum frequency, f = 0 means no input lines change.
2. Typical values are measured at V_{DD}=3.0V, T_A=25°C. Not 100% tested.

READ CYCLE SWITCHING CHARACTERISTICS[1] (Over Operating Range)

Symbol	Parameter	45 ns Min.	45 ns Max.	55 ns Min.	55 ns Max.	Unit
t_{RC}	Read Cycle Time	45	—	55	—	ns
t_{AA}	Address Access Time	—	45	—	55	ns
t_{OHA}	Output Hold Time	10	—	10	—	ns
t_{ACS1}/t_{ACS2}	$\overline{CS1}$/CS2 Access Time	—	45	—	55	ns
t_{DOE}	$\overline{OE}$ Access Time	—	20	—	25	ns
t_{HZOE}[2]	$\overline{OE}$ to High-Z Output	—	15	—	20	ns
t_{LZOE}[2]	$\overline{OE}$ to Low-Z Output	5	—	5	—	ns
t_{HZCS1}/t_{HZCS2}[2]	$\overline{CS1}$/CS2 to High-Z Output	0	15	0	20	ns
t_{LZCS1}/t_{LZCS2}[2]	$\overline{CS1}$/CS2 to Low-Z Output	10	—	10	—	ns
t_{BA}	$\overline{LB}$, $\overline{UB}$ Access Time	—	45	—	55	ns
t_{HZB}	$\overline{LB}$, $\overline{UB}$ to High-Z Output	0	15	0	20	ns
t_{LZB}	$\overline{LB}$, $\overline{UB}$ to Low-Z Output	0	—	0	—	ns

Notes:
1. Test conditions assume signal transition times of 5 ns or less, timing reference levels of 0.9V/1.5V, input pulse levels of 0.4 to V_{DD}-0.2V/V_{DD}-0.3V and output loading specified in Figure 1.
2. Tested with the load in Figure 2. Transition is measured ±500 mV from steady-state voltage. Not 100% tested.

AC WAVEFORMS

READ CYCLE NO. 1[1,2] (Address Controlled) ($\overline{CS1}$ = $\overline{OE}$ = V_{IL}, CS2 = $\overline{WE}$ = V_{IH}, $\overline{UB}$ or $\overline{LB}$ = V_{IL})

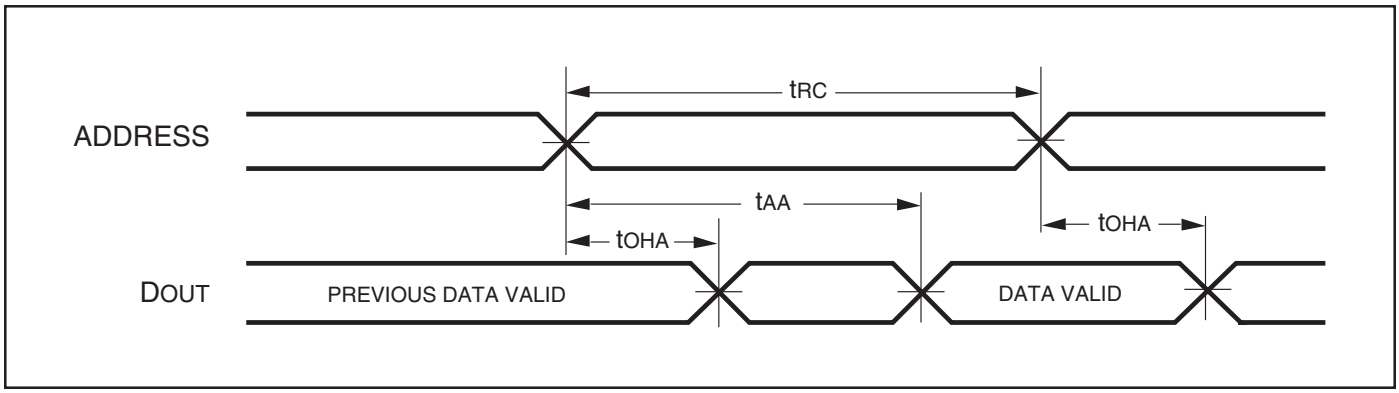

AC WAVEFORMS

READ CYCLE NO. 2[1,3] ($\overline{CS1}$, CS2, $\overline{OE}$, AND $\overline{UB}$/$\overline{LB}$ Controlled)

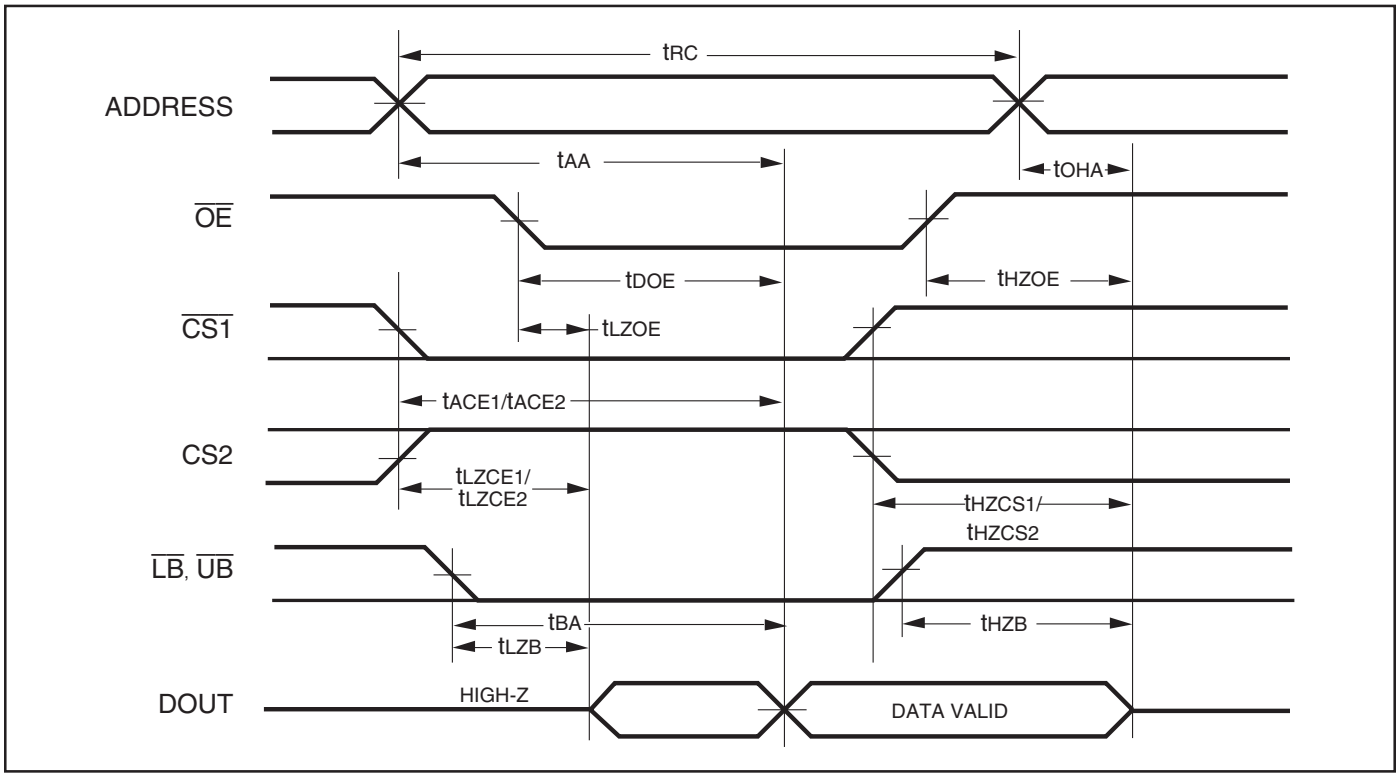

Notes:
1. $\overline{WE}$ is HIGH for a Read Cycle.
2. The device is continuously selected. $\overline{OE}$, $\overline{CS1}$, $\overline{UB}$, or $\overline{LB}$ = V_{IL}. CS2=$\overline{WE}$=V_{IH}.
3. Address is valid prior to or coincident with $\overline{CS1}$ LOW transition.

WRITE CYCLE SWITCHING CHARACTERISTICS[1,2] (Over Operating Range)

Symbol	Parameter	45ns Min.	45ns Max.	55 ns Min.	55 ns Max.	Unit
t_{WC}	Write Cycle Time	45	—	55	—	ns
t_{SCS1}/t_{SCS2}	$\overline{CS1}$/CS2 to Write End	35	—	45	—	ns
t_{AW}	Address Setup Time to Write End	35	—	45	—	ns
t_{HA}	Address Hold from Write End	0	—	0	—	ns
t_{SA}	Address Setup Time	0	—	0	—	ns
t_{PWB}	$\overline{LB}$, $\overline{UB}$ Valid to End of Write	35	—	45	—	ns
t_{PWE}	$\overline{WE}$ Pulse Width	35	—	40	—	ns
t_{SD}	Data Setup to Write End	20	—	25	—	ns
t_{HD}	Data Hold from Write End	0	—	0	—	ns
t_{HZWE}[3]	$\overline{WE}$ LOW to High-Z Output	—	20	—	20	ns
t_{LZWE}[3]	$\overline{WE}$ HIGH to Low-Z Output	5	—	5	—	ns

Notes:

1. Test conditions assume signal transition times of 5 ns or less, timing reference levels of 0.9V/1.5V, input pulse levels of 0.4V to V_{DD}-0.2V/V_{DD}-0.3V and output loading specified in Figure 1.
2. The internal write time is defined by the overlap of $\overline{CS1}$ LOW, CS2 HIGH and $\overline{UB}$ or $\overline{LB}$, and $\overline{WE}$ LOW. All signals must be in valid states to initiate a Write, but any one can go inactive to terminate the Write. The Data Input Setup and Hold timing are referenced to the rising or falling edge of the signal that terminates the write.
3. Tested with the load in Figure 2. Transition is measured ±500 mV from steady-state voltage. Not 100% tested.

AC WAVEFORMS

WRITE CYCLE NO. 1[1,2] ($\overline{CS1}$ Controlled, $\overline{OE}$ = HIGH or LOW)

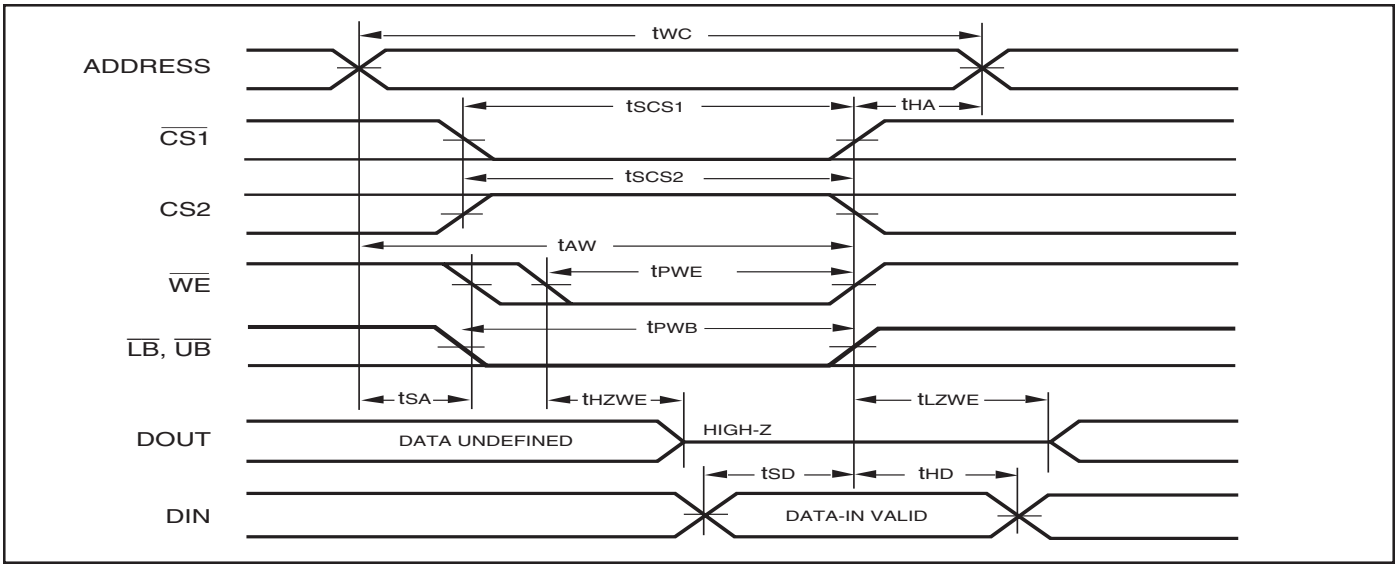

Notes:

1. WRITE is an internally generated signal asserted during an overlap of the LOW states on the $\overline{CS1}$, CS2 and $\overline{WE}$ inputs and at least one of the $\overline{LB}$ and $\overline{UB}$ inputs being in the LOW state.
2. WRITE = ($\overline{CS1}$) [($\overline{LB}$) = ($\overline{UB}$)] ($\overline{WE}$).

WRITE CYCLE NO. 2 ($\overline{WE}$ Controlled: $\overline{OE}$ is HIGH During Write Cycle)

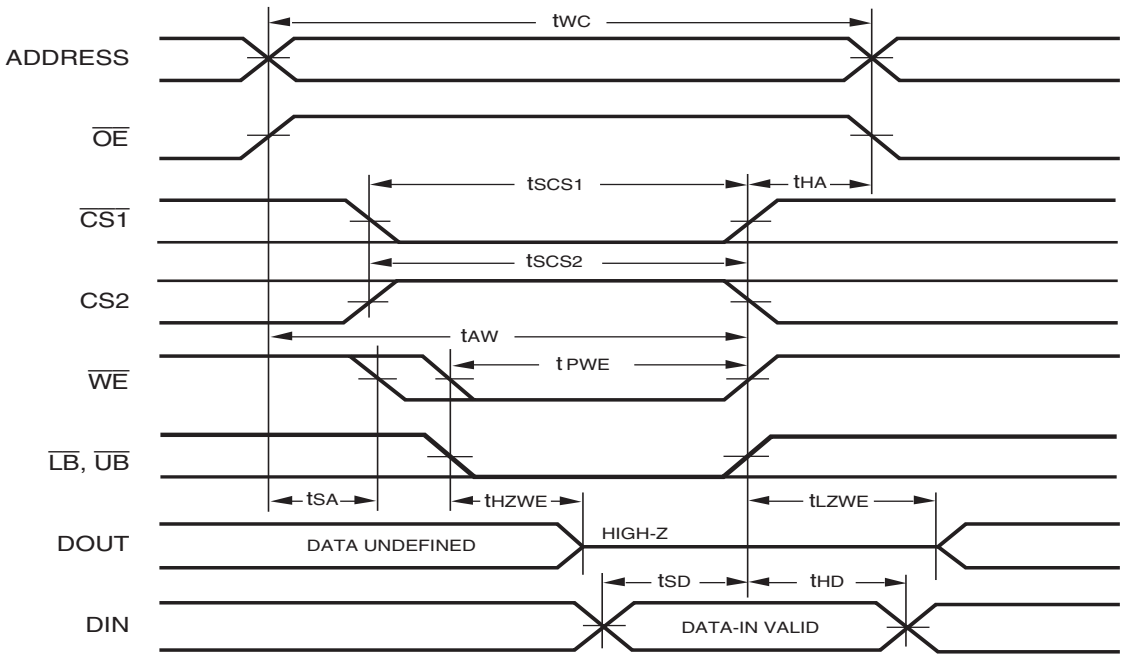

WRITE CYCLE NO. 3 ($\overline{WE}$ Controlled: $\overline{OE}$ is LOW During Write Cycle)

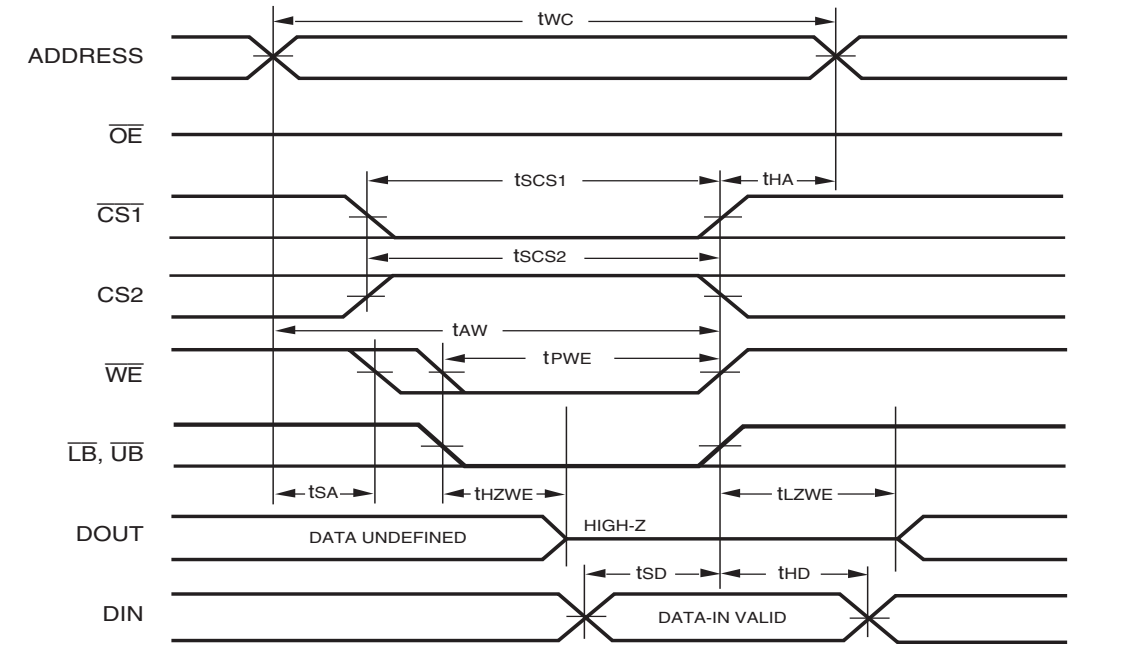

WRITE CYCLE NO. 4 ($\overline{UB}$/$\overline{LB}$ Controlled)

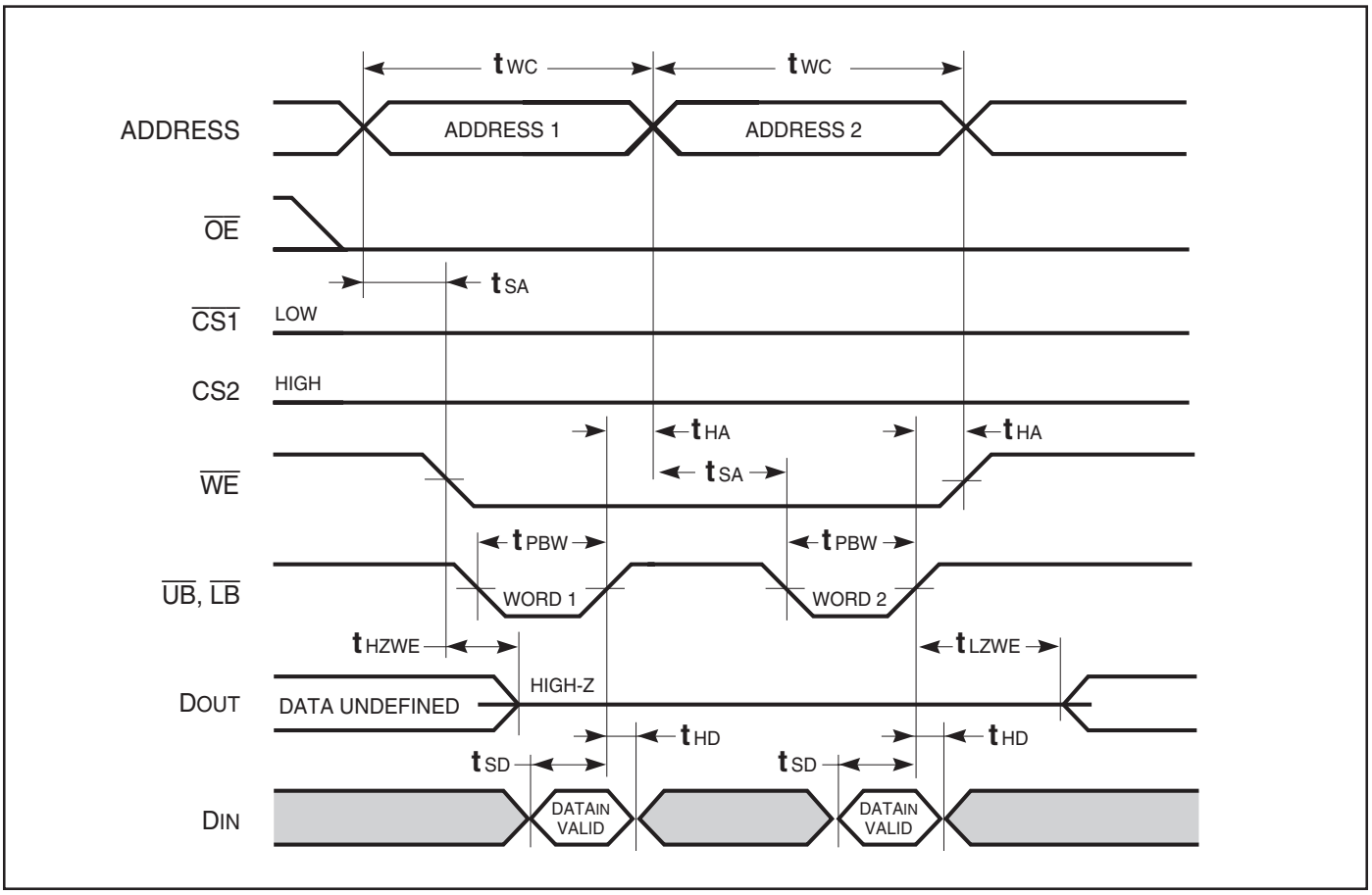

DATA RETENTION SWITCHING CHARACTERISTICS

Symbol	Parameter	Test Condition	Min.	Max.	Unit
V_{DR}	V_{DD} for Data Retention	See Data Retention Waveform	1.2	3.6	V
I_{DR}	Data Retention Current	V_{DD} = 1.2V, $\overline{CS1} \geq V_{DD} - 0.2V$	—	5	µA
t_{SDR}	Data Retention Setup Time	See Data Retention Waveform	0	—	ns
t_{RDR}	Recovery Time	See Data Retention Waveform	t_{RC}	—	ns

DATA RETENTION WAVEFORM ($\overline{CS1}$ Controlled)

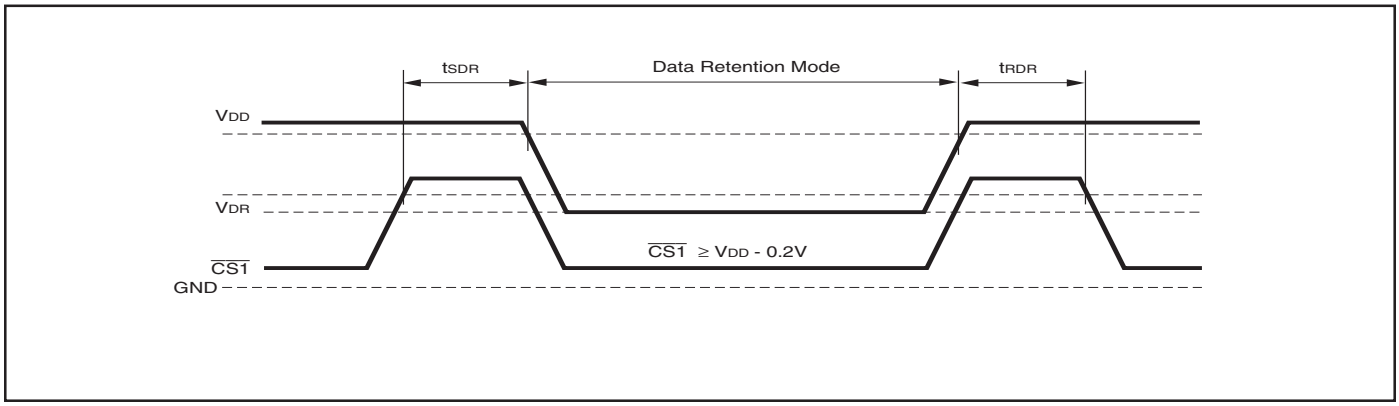

DATA RETENTION WAVEFORM (CS2 Controlled)

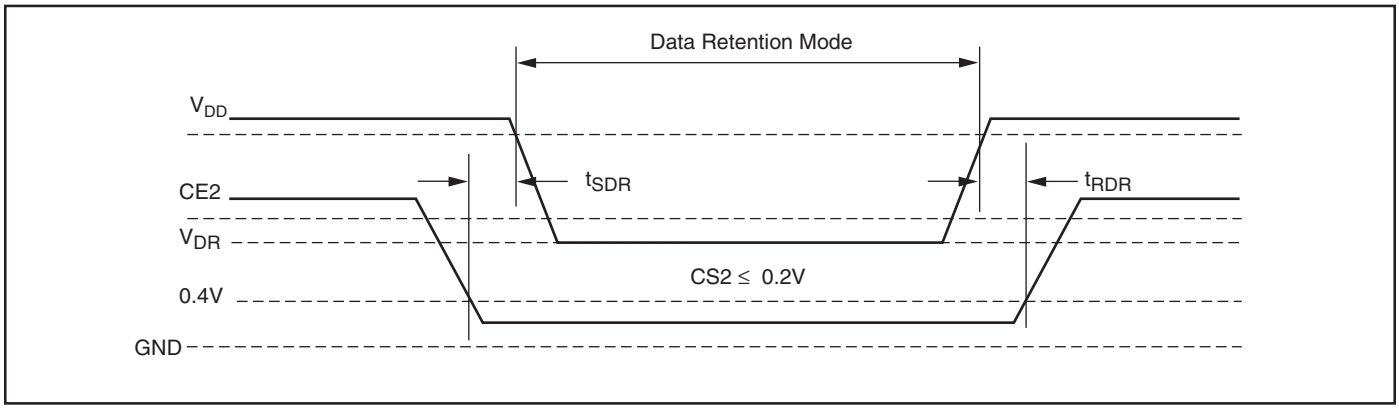

ORDERING INFORMATION

IS62WV6416ALL (1.7V - 2.2V)

Commercial Range: 0°C to +70°C

Speed (ns)	Order Part No.	Package
55	IS62WV6416ALL-55T	TSOP-II
	IS62WV6416ALL-55B	mini BGA (6mm x 8mm)

Industrial Range: –40°C to +85°C

Speed (ns)	Order Part No.	Package
55	IS62WV6416ALL-55TI	TSOP-II
	IS62WV6416ALL-55TLI	TSOP-II, Lead-free
	IS62WV6416ALL-55BI	mini BGA (6mm x 8mm)
	IS62WV6416ALL-55BLI	mini BGA (6mm x 8mm), Lead-free
	IS62WV6416ALL-55B2I	mini BGA (6mm x 8mm), 2 CS Option

ORDERING INFORMATION

IS62WV6416BLL (2.5V - 3.6V)

Commercial Range: 0°C to +70°C

Speed (ns)	Order Part No.	Package
45	IS62WV6416BLL-45T	TSOP-II
	IS62WV6416BLL-45B	mini BGA (6mm x 8mm)

Industrial Range: –40°C to +85°C

Speed (ns)	Order Part No.	Package
45	IS62WV6416BLL-45TI	TSOP-II
	IS62WV6416BLL-45BI	mini BGA (6mm x 8mm)
	IS62WV6416BLL-45BLI	mini BGA (6mm x 8mm), Lead-free
55	IS62WV6416BLL-55TI	TSOP-II
	IS62WV6416BLL-55TLI	TSOP-II, Lead-free
	IS62WV6416BLL-55BI	mini BGA (6mm x 8mm)
	IS62WV6416BLL-55BLI	mini BGA (6mm x 8mm), Lead-free
	IS62WV6416BLL-55B2I	mini BGA (6mm x 8mm), 2 CS Option

PACKAGING INFORMATION

Mini Ball Grid Array
Package Code: B (48-pin)

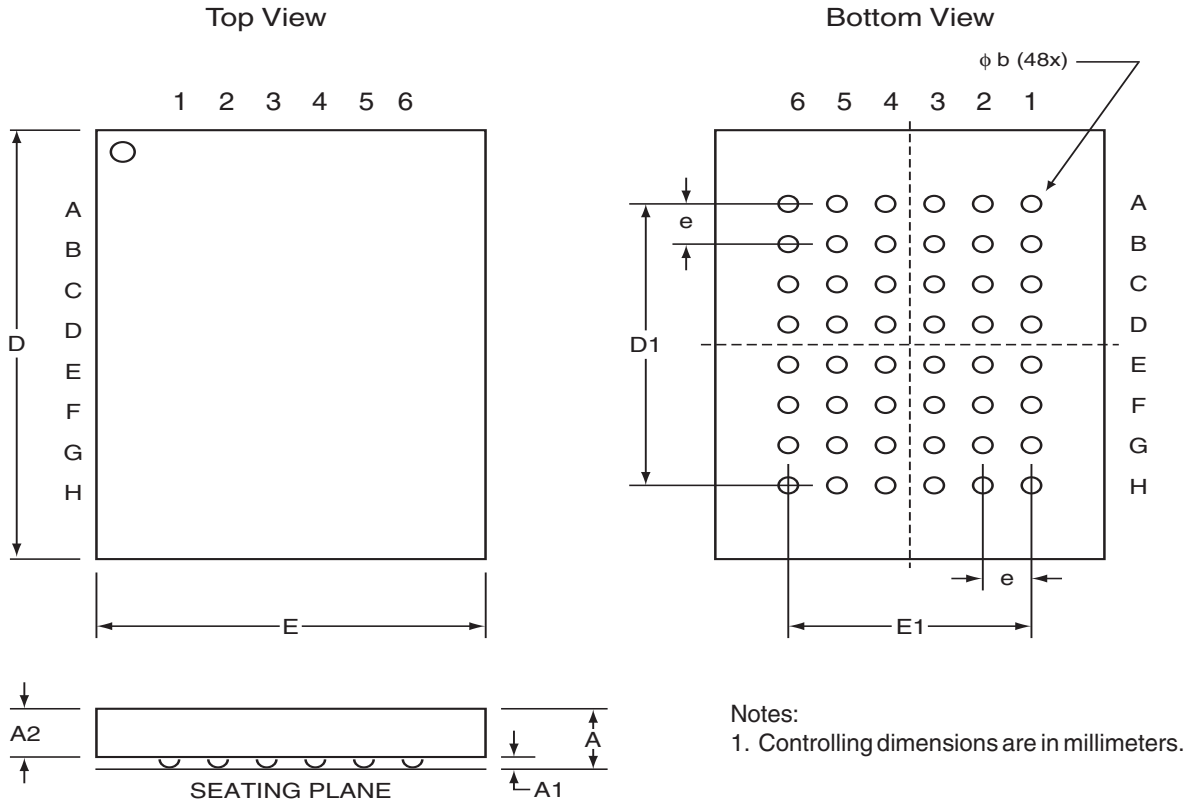

Notes:
1. Controlling dimensions are in millimeters.

mBGA - 6mm x 8mm

	MILLIMETERS			INCHES		
Sym.	**Min.**	**Typ.**	**Max.**	**Min.**	**Typ.**	**Max.**
N0. Leads		**48**				
A	—	—	1.20	—	—	0.047
A1	0.24	—	0.30	0.009	—	0.012
A2	0.60	—	—	0.024	—	—
D	7.90	—	8.10	0.311	—	0.319
D1		5.25 BSC			0.207 BSC	
E	5.90	—	6.10	0.232	—	0.240
E1		3.75 BSC			0.148 BSC	
e		0.75 BSC			0.030 BSC	
b	0.30	0.35	0.40	0.012	0.014	0.016

mBGA - 8mm x 10mm

	MILLIMETER			INCHES		
Sym.	**Min.**	**Typ.**	**Max.**	**Min.**	**Typ.**	**Max.**
N0. Leads		**48**				
A	—	—	1.20	—	—	0.047
A1	0.24	—	0.30	0.009	—	0.012
A2	0.60	—	—	0.024	—	—
D	9.90	—	10.10	0.390	—	0.398
D1		5.25 BSC			0.207 BSC	
E	7.90	—	8.10	0.311	—	0.319
E1		3.75 BSC			0.148 BSC	
e		0.75 BSC			0.030 BSC	
b	0.30	0.35	0.40	0.012	0.014	0.016

Copyright © 2003 Integrated Silicon Solution, Inc. All rights reserved. ISSI reserves the right to make changes to this specification and its products at any time without notice. ISSI assumes no liability arising out of the application or use of any information, products or services described herein. Customers are advised to obtain the latest version of this device specification before relying on any published information and before placing orders for products.

PACKAGING INFORMATION

Plastic TSOP
Package Code: T (Type II)

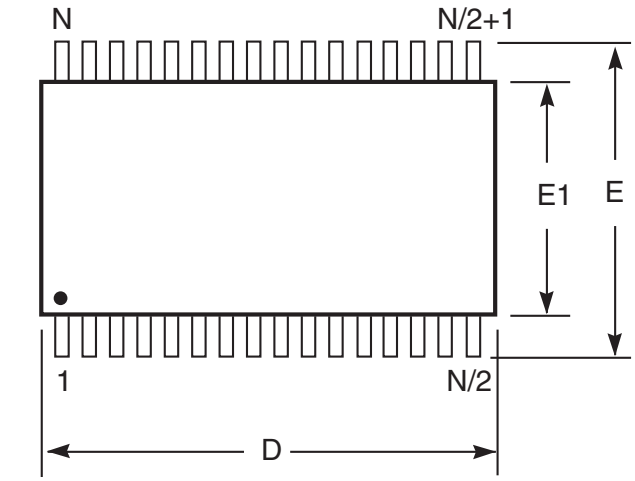

Notes:
1. Controlling dimension: millimieters, unless otherwise specified.
2. BSC = Basic lead spacing between centers.
3. Dimensions D and E1 do not include mold flash protrusions and should be measured from the bottom of the package.
4. Formed leads shall be planar with respect to one another within 0.004 inches at the seating plane.

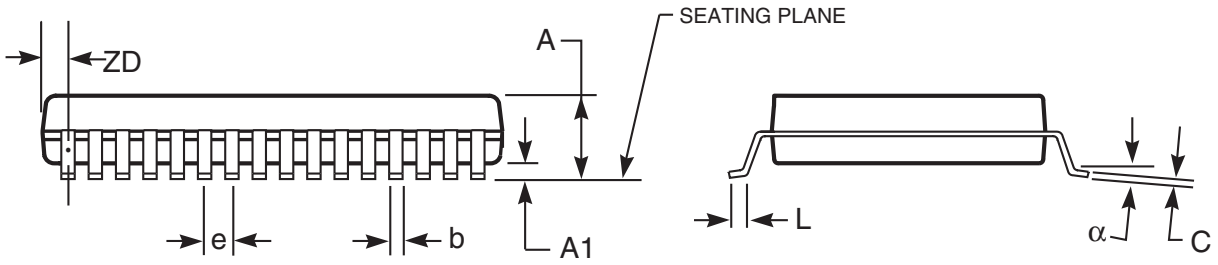

Plastic TSOP (T - Type II)

	Millimeters		Inches		Millimeters		Inches		Millimeters		Inches	
Symbol	**Min**	**Max**	**Min**	**Max**	**Min**	**Max**	**Min**	**Max**	**Min**	**Max**	**Min**	**Max**
Ref. Std.												
No. Leads (N)		**32**				**44**				**50**		
A	—	1.20	—	0.047	—	1.20	—	0.047	—	1.20	—	0.047
A1	0.05	0.15	0.002	0.006	0.05	0.15	0.002	0.006	0.05	0.15	0.002	0.006
b	0.30	0.52	0.012	0.020	0.30	0.45	0.012	0.018	0.30	0.45	0.012	0.018
C	0.12	0.21	0.005	0.008	0.12	0.21	0.005	0.008	0.12	0.21	0.005	0.008
D	20.82	21.08	0.820	0.830	18.31	18.52	0.721	0.729	20.82	21.08	0.820	0.830
E1	10.03	10.29	0.391	0.400	10.03	10.29	0.395	0.405	10.03	10.29	0.395	0.405
E	11.56	11.96	0.451	0.466	11.56	11.96	0.455	0.471	11.56	11.96	0.455	0.471
e	1.27 BSC		0.050 BSC		0.80 BSC		0.032 BSC		0.80 BSC		0.031 BSC	
L	0.40	0.60	0.016	0.024	0.41	0.60	0.016	0.024	0.40	0.60	0.016	0.024
ZD	0.95 REF		0.037 REF		0.81 REF		0.032 REF		0.88 REF		0.035 REF	
α	0°	5°	0°	5°	0°	5°	0°	5°	0°	5°	0°	5°

Copyright © 2003 Integrated Silicon Solution, Inc. All rights reserved. ISSI reserves the right to make changes to this specification and its products at any time without notice. ISSI assumes no liability arising out of the application or use of any information, products or services described herein. Customers are advised to obtain the latest version of this device specification before relying on any published information and before placing orders for products.