IS431/IS432 Totem Pole Output Type OPIC Light Detector

T-41-69

■ Features

1. Totem pole output type (Fanout : 10 gates)
2. Built-in Schmidt trigger circuit
3. High sensitivity (E_V : MAX. 35 ℓx at Ta= 25°C)
4. Low level output under incident light (IS431)
   High level output under incident light (IS432)

■ Applications

1. Floppy disk drives
2. Copiers, printers, facsimiles
3. VCRs, cassette decks
4. Automatic vending machines

■ Outline Dimensions (Unit : mm)

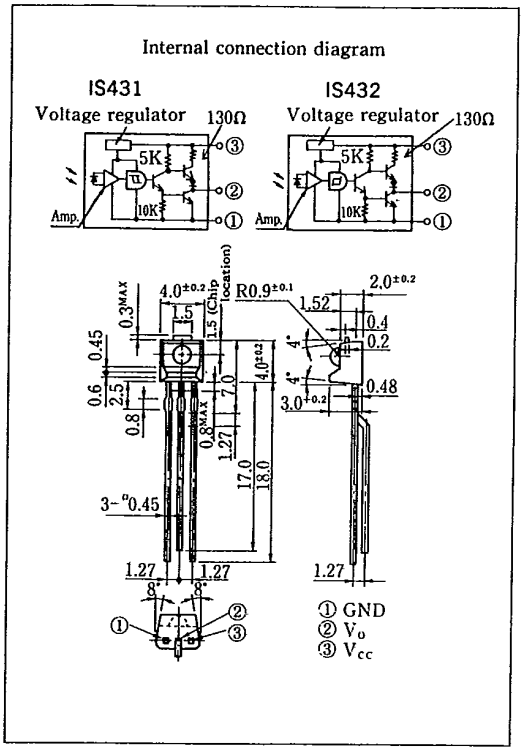

※OPIC is a registered trademark of Sharp and stands for Optical IC. It has a light detecting element and signal processing circuitry integrated onto a single chip.

■ Absolute Maximum Ratings (Ta=25°C)

Parameter	Symbol	Rating	Unit
Supply voltage	V_{CC}	−0.5~+7	V
Power dissipation	P	250	mW
Operating temperature	T_{opr}	−25~+85	°C
Storage temperature	T_{stg}	−40~+100	°C
*1Soldering temperature	T_{sol}	260	°C

*1 For 5 seconds at the position of 2.5mm from the bottom face of package.

■ Electro-optical Characteristics

(Unless otherwise specified Ta=0~70°C, V_{CC}=5V)

Parameter		Symbol	Conditions	MIN.	TYP.	MAX.	Unit
Low level output voltage		V_{OL}	V_{CC}=4.5V, I_{OL}=16mA*2	—	0.15	0.4	V
High level output voltage		V_{OH}	V_{CC}=4.5V, I_{OH}=−400μA*3	2.4	—	—	V
Low level supply current		I_{CCL}	*2	—	2.3	5.0	mA
High level supply current		I_{CCH}	*3	—	1.3	3.5	mA
Output short circuit current		I_{OS}	T≦1 sec., *3	6	17	35	mA
*4"High"→"Low" threshold illuminance	IS431	E_{VHL}	Ta=25°C	—	15	35	ℓx
				—	—	50	
	IS432		Ta=25°C	1.5	10	—	
				1	—	—	
*5"Low"→"High" threshold illuminance	IS431	E_{VLH}	Ta=25°C	1.5	10	—	ℓx
				1	—	—	
	IS432		Ta=25°C	—	15	35	
				—	—	50	
*6Hysteresis	IS431	E_{VLH}/E_{VHL}	Ta=25°C, R_L=280Ω	0.50	0.65	0.90	—
	IS432	E_{VHL}/E_{VLH}					
Response time "High"→"Low" propagation time	IS431	t_{PHL}	Ta=25°C, E_V=50 ℓx, R_L=280Ω	—	3	9	μs
	IS432			—	5	15	
Response time "Low"→"High" propagation time	IS431	t_{PLH}		—	5	15	
	IS432			—	3	9	
Response time Rise time		t_r		—	0.1	0.5	
Response time Fall time		t_f		—	0.05	0.5	

*2 Defines E_V=50 ℓx (IS431) and E_V=0 (IS432).
*3 Defines E_V=0 (IS431) and E_V=50 ℓx (IS432).
*4 E_{VHL} represents illuminance by CIE standard light source A (tungsten lamp) when output goes from high to low.
*5 E_{VLH} represents illuminance by CIE standard light source A (tungsten lamp) when output goes from low to high.
*6 Hysteresis stands for E_{VLH}/E_{VHL} (IS431) and E_{VHL}/E_{VLH} (IS432).

■ Recommended Operating Conditions (Ta=0~+70°C)

Parameter	Symbol	MIN.	MAX.	Unit
Supply voltage	V_{CC}	4.5	5.5	V
Low level output current	I_{OL}	—	16	mA
High level output current	I_{OH}	—	−400	μA

Fig. 1 Power Dissipation vs. Ambient Temperature

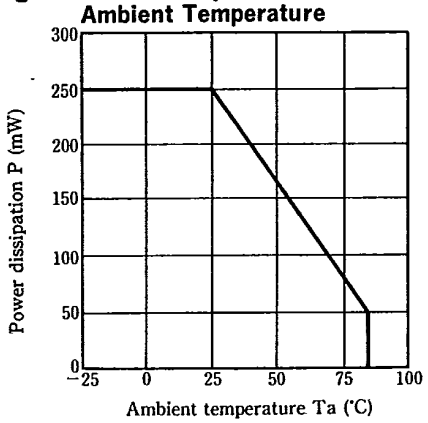

Fig. 2 Relative Threshold Illuminance vs. Supply Voltage

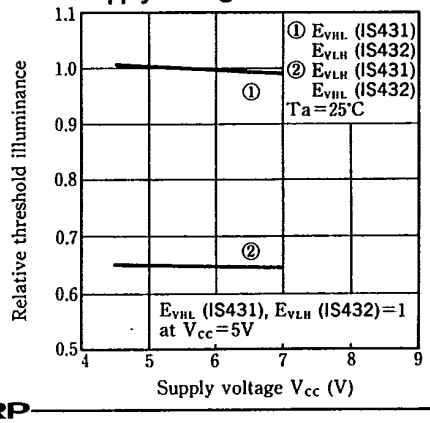

Fig. 3 Low Level Output Voltage vs. Low Level Output Current

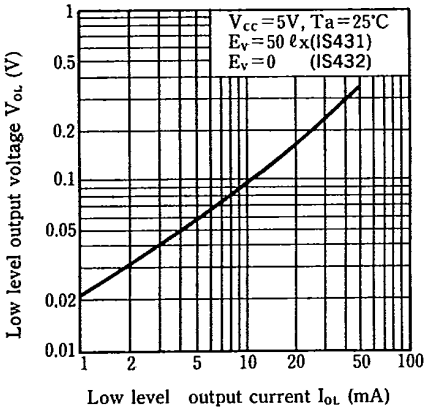

Fig. 4 Low Level Output Voltage vs. Ambient Temperature

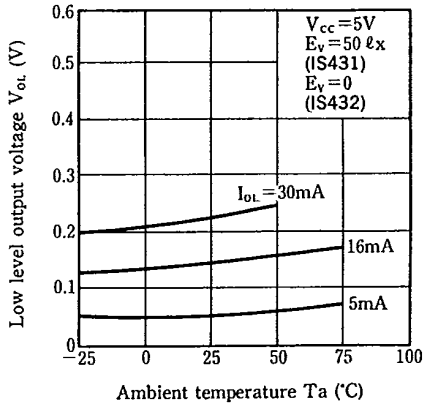

Fig. 5 Supply Current vs. Supply Voltage

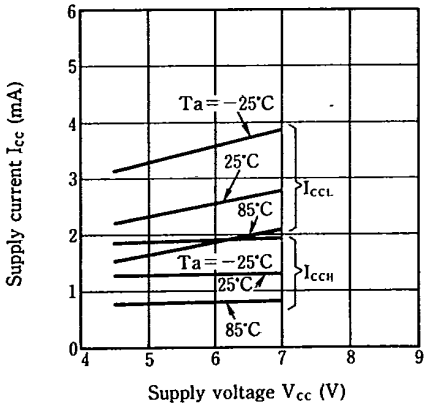

Fig. 6 Propagation Time vs. Illuminance

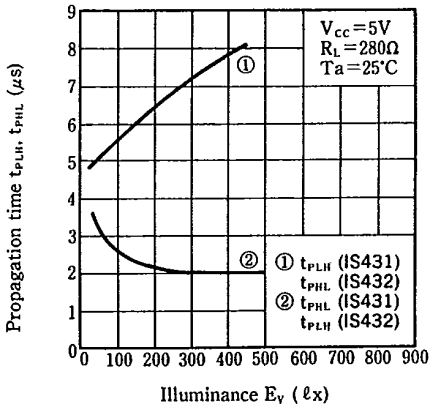

Fig. 7 Rise Time, Fall Time vs. Load Resistance

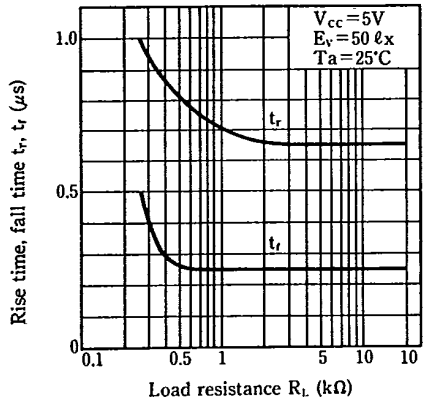

Test Circuit for Response Time (IS431)

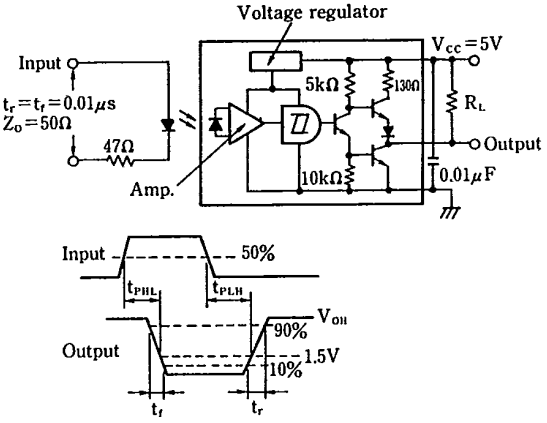

Test Circuit for Response Time (IS432)

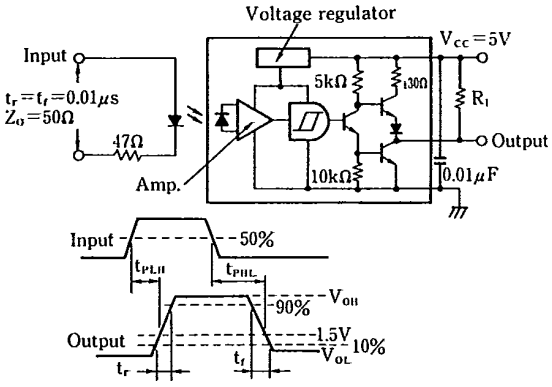

Fig. 8 Sensitivity Diagram (Ta=25°C)

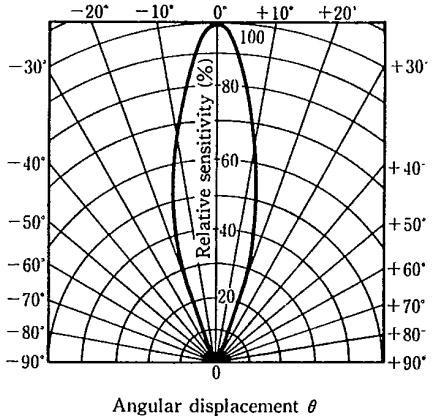

Fig. 9 Spectral Sensitivity

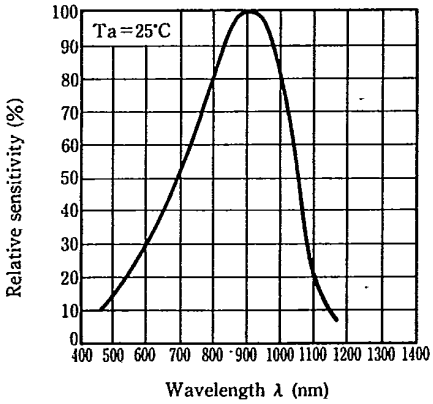

4