IS3H7

DESCRIPTION

The IS3H7 series optocoupler consists of an infrared emitting diode optically coupled to an NPN silicon photo transistor.

This device belongs to Isocom Compact Range of Optocouplers.

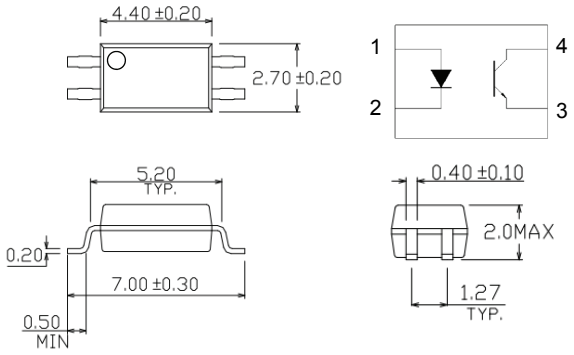

All dimensions in mm.

FEATURES

- Half Pitch 1.27mm
- High AC Isolation voltage 3750V_{RMS}
- CTR Selections Available
- Wide Operating Temperature Range -55°C to 110°C
- Pb Free and RoHS Compliant
- UL Approval E91231, Model THP

APPLICATIONS

- Switching Mode Power Supply
- Industrial System Controllers
- Measuring Instruments
- Signal Transmission between Systems of Different Potentials and Impedances

ORDER INFORMATION

- Available in Tape and Reel with 1000pcs per reel

ABSOLUTE MAXIMUM RATINGS (T_A = 25°C)

Input Diode

Forward Current	50mA
Reverse Voltage	6V
Power dissipation	70mW

Output Transistor

Collector to Emitter Voltage BV_{CEO}	80V
Emitter to Collector Voltage BV_{ECO}	7V
Collector Current	50mA
Power Dissipation	150mW

Total Package

Isolation Voltage	3750V_{RMS}
Total Power Dissipation	200mW
Operating Temperature	-55 to 110 °C
Storage Temperature	-55 to 125 °C
Lead Soldering Temperature (10s)	260°C

ISOCOM COMPONENTS 2004 LTD
Unit 25B, Park View Road West, Park View Industrial Estate
Hartlepool, Cleveland, TS25 1UD, United Kingdom
Tel: +44 (0)1429 863 609 Fax : +44 (0)1429 863 581
e-mail: sales@isocom.co.uk
http://www.isocom.com

ISOCOM COMPONENTS ASIA LTD
Hong Kong Office,
Block A, 8/F, Wah Hing Industrial mansion,
36 Tai Yau Street, San Po Kong, Kowloon, Hong Kong.
Tel: +852 2995 9217 Fax : +852 8161 6292
e-mail: sales@isocom.com.hk

ELECTRICAL CHARACTERISTICS (T_A = 25°C unless otherwise specified)

INPUT

Parameter	Symbol	Test Condition	Min	Typ.	Max	Unit
Forward Voltage	V_F	I_F = 20mA		1.2	1.4	V
Reverse Current	I_R	VR = 4V			10	µA
Input Capacitance	C_{IN}	V_F = 0V, f = 1KHz		30	250	pF

OUTPUT

Parameter	Symbol	Test Condition	Min	Typ.	Max	Unit
Collector-Emitter breakdown Voltage	BV_{CEO}	I_C = 0.1mA, I_F = 0mA	80			V
Emitter-Collector breakdown Voltage	BV_{ECO}	I_E = 0.1mA, I_F = 0mA	7			V
Collector-Emitter Dark Current	I_{CEO}	V_{CE} = 20V, I_F = 0mA			100	nA

ELECTRICAL CHARACTERISTICS (T_A = 25°C unless otherwise specified)

COUPLED

Parameter	Symbol	Test Condition	Min	Typ.	Max	Unit
Current transfer ratio	CTR	I_F = 5mA, V_{CE} = 5V				%
		IS3H&	50		600	
		IS3H&A	80		160	
		IS3H&B	130		260	
		IS3H&C	200		400	
		IS3H&D	300		600	
		IS3H&E	100		200	
		IS3H&F	150		300	
		I_F = 10mA, V_{CE} = 5V				
		IS3H&H	40		80	
		IS3H&I	63		125	
		IS3H&J	100		200	
		IS3H&K	160		320	
		IS3H&GR	100		300	
		IS3H&GB	100		600	
Collector-Emitter Saturation Voltage	$V_{CE(sat)}$	I_F = 10mA, I_C = 1mA		0.1	0.2	V
Input to Output Isolation Voltage	V_{ISO}	See note 1	3750			V_{RMS}
Input to Output Isolation Resistance	R_{ISO}	V_{IO}= 500V See note 1	$5x10^{10}$			Ω
Floating Capacitance	C_f	V_F = 0V, f = 1MHz		0.3		pF
Output Rise Time	t_r	V_{CE} = 2V, Ic = 2mA, R_L = 100Ω		6	18	µs
Output Fall Time	t_f	V_{CE} = 2V, Ic = 2mA, R_L = 100Ω		6	18	µs

Note 1 : Measured with input leads shorted together and output leads shorted together, R.H 40% to 60%

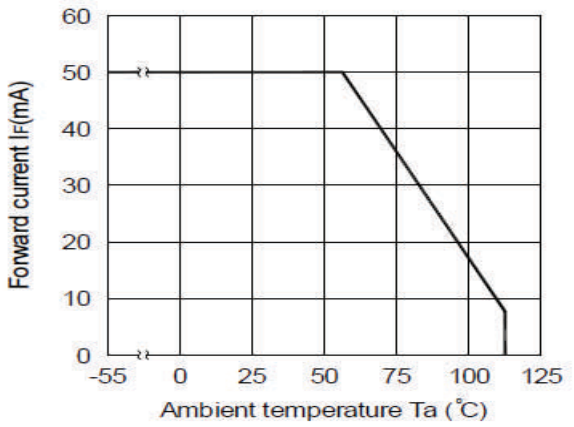

Fig 1 Forward Current vs Ambient Temperature

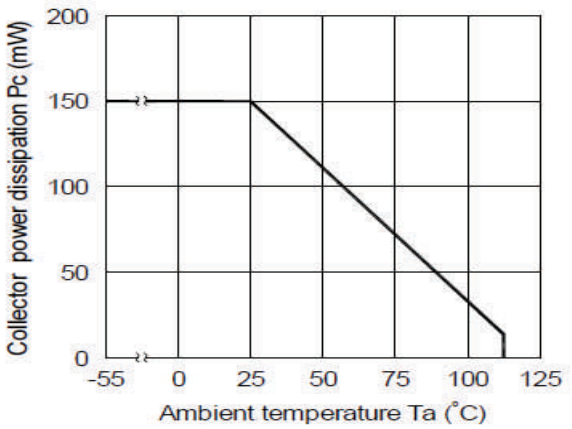

Fig 2 Collector Power Dissipation vs T_A

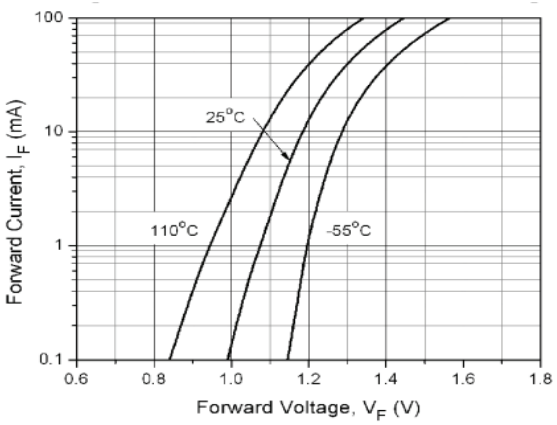

Fig 3 Forward Current vs Forward Voltage

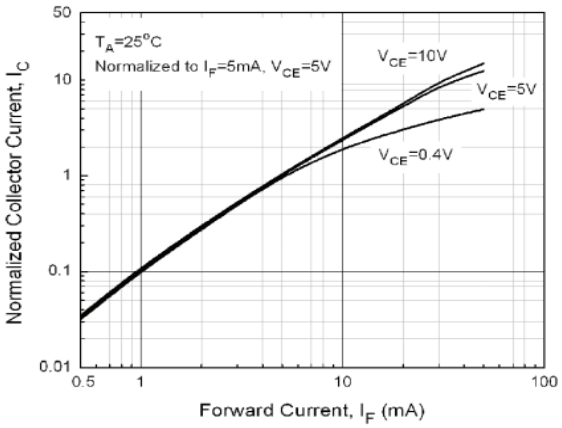

Fig 4 Normalized Collector Current vs Forward Current

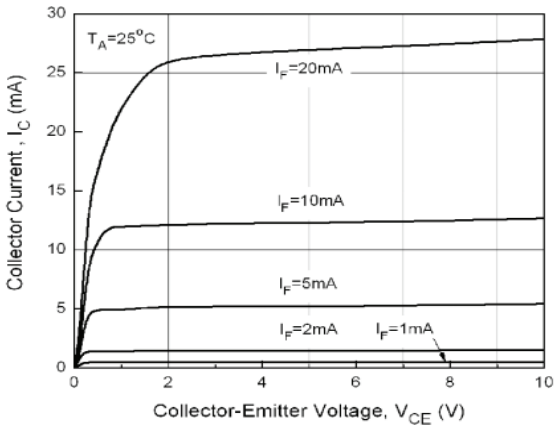

Fig 5 Collector Current vs Collector-Emitter Voltage (1)

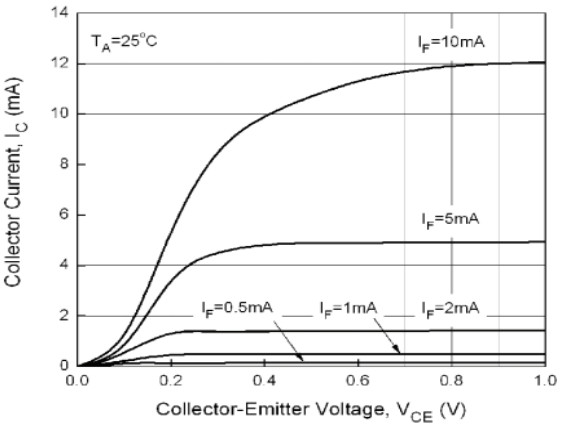

Fig 6 Collector Current vs Collector-Emitter Voltage (2)

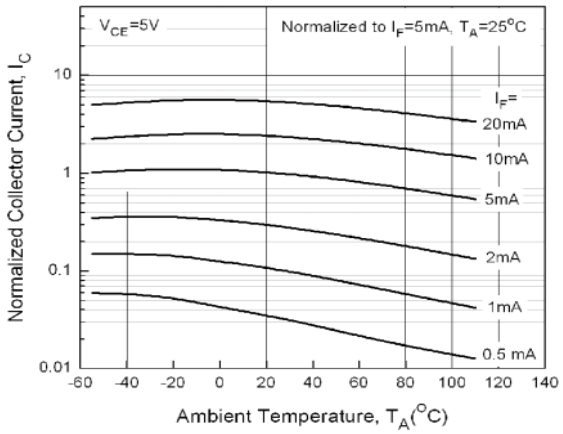

Fig 7 Normalized Collector Current vs Ambient Temperature

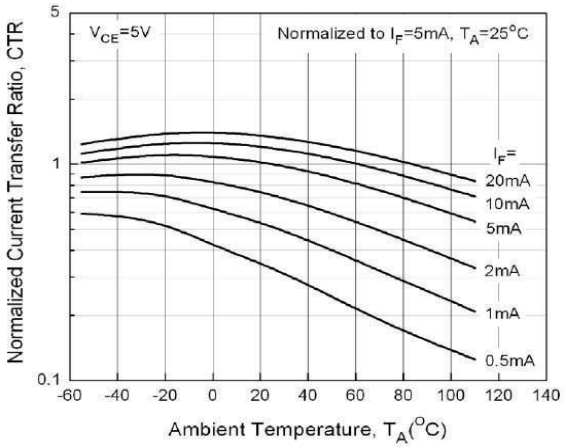

Fig 8 Normalized CTR vs Ambient Temperature

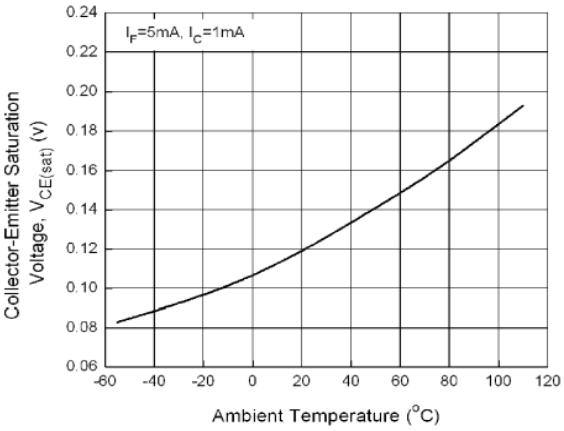

Fig 9 Collector-Emitter Voltage vs Ambient Temperature

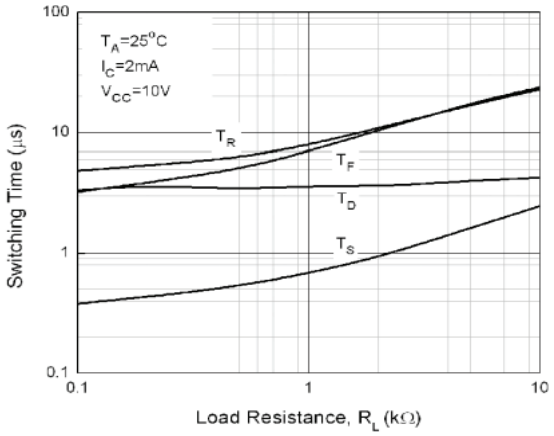

Fig 10 Switching Time vs Load Resistance

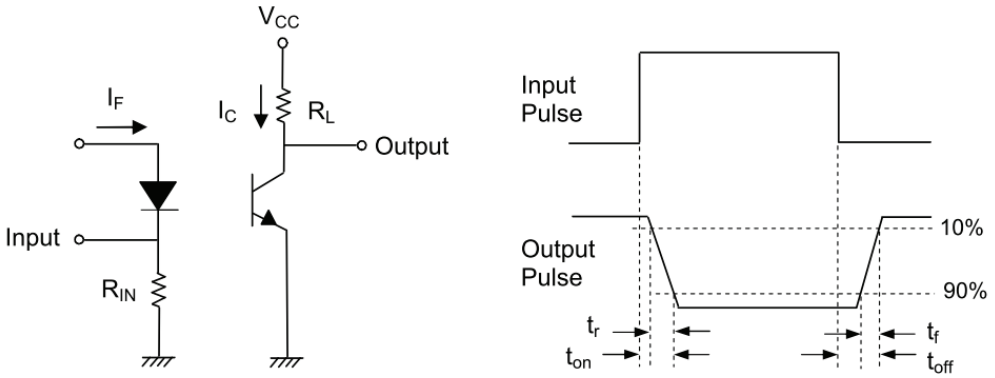

Switching Time Test Circuit

ORDER INFORMATION

IS3H&			
After PN	**PN**	**Description**	**Packing quantity**
None	IS3H&	Surface Mount Tape & Reel	1000 pcs per reel
Any CTR Grade	IS3H&A, IS3H&B, IS3H&C, IS3H&D, IS3H&E, IS3H&F, IS3H&H, IS3H&I, IS3H&J, IS3H&K, IS3H&GR, IS3H&GB	Surface Mount Tape & Reel	1000 pcs per reel

DEVICE MARKING



THP_	denotes Device Part Number where "_" denoted CTR Grade
I	denotes Isocom
Y	denotes 1 digit Year code
WW	denotes 2 digit Week code

PACKAGE DIMENSIONS (mm)

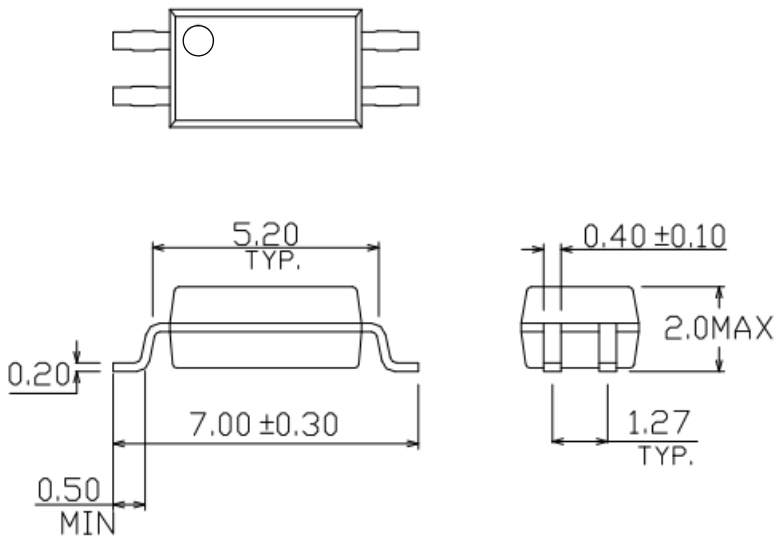

RECOMMENDED SOLDER PAD LAYOUT (mm)

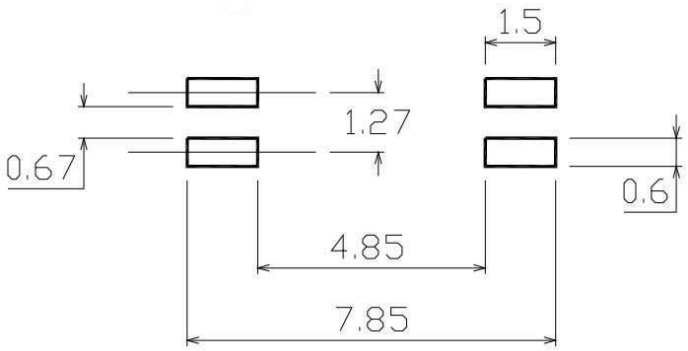

IR REFLOW SOLDERING TEMPERATURE PROFILE

(One Time Reflow Soldering is Recommended)

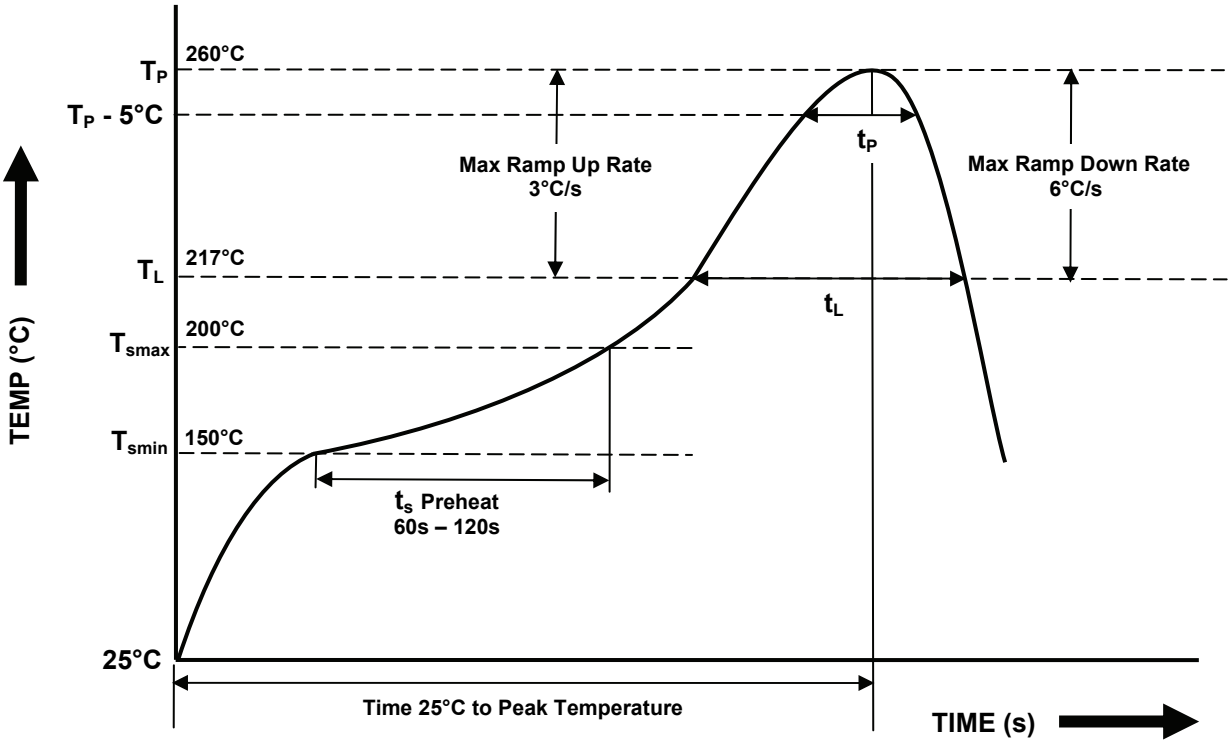

Profile Details	Conditions
Preheat - Min Temperature (T_{SMIN}) - Max Temperature (T_{SMAX}) - Time T_{SMIN} to T_{SMAX} (t_s)	 150°C 200°C 60s – 120s
Soldering Zone - Peak Temperature (T_P) - Liquidous Temperature (T_L) - Time within 5°C of Actual Peak Temperature (T_P – 5°C) - Time maintained above T_L (t_L) - Ramp Up Rate (T_L to T_P) - Ramp Down Rate (T_P to T_L)	 260°C 217°C 30s 60s – 100s 3°C/s max 6°C/s max
Average Ramp Up Rate (T_{smax} to T_P)	3°C/s max
Time 25°C to Peak Temperature	8 minutes max

Tape and Reel Packaging

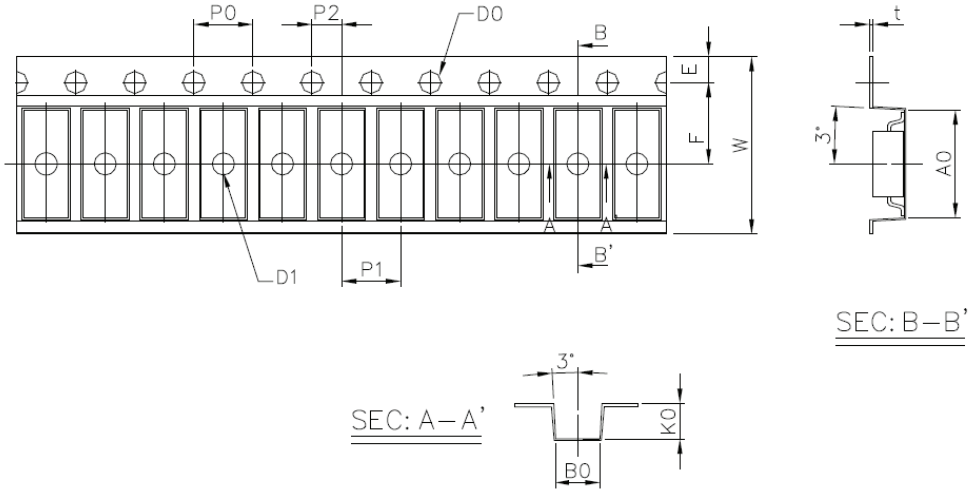

Dimension No.	A	B	Do	D1	E	F
Dimension (mm)	3.0 ± 0.1	7.3 ± 0.1	1.5 + 0.1/-0	1.5 ± 0.1	1.7 5± 0.1	5.5 ± 0.1

Dimension No.	Po	P1	P2	t	W	K
Dimension (mm)	4.0 ± 0.15	4.0 ± 0.1	2.0 ± 0.1	0.25 ± 0.03	12.0 ± 0.2	2.4 ± 0.1

Notes:

- Isocom is continually improving the quality, reliability, function or design and Isocom reserves the right to make changes without further notices.

- The products shown in this publication are designed for the general use in electronic applications such as office automation equipment, communications devices, audio/visual equipment, electrical application and instrumentation.

- For equipment/application where high reliability or safety is required, such as space applications, nuclear power control equipment, medical equipment, etc., please contact our sales representatives.

- When requiring a device for any ”specific” application, please contact our sales for advice.

- The contents described herein are subject to change without prior notice.

- Do not immerse device body in solder paste.