2MHz, 1.5A FLASH/TORCH LED DRIVER

Preliminary Information
September 2014

GENERAL DESCRIPTION

The IS31BL3233A is the ideal power solution for high-power flash LEDs used with cell phone camera modules or digital still cameras. It is a highly integrated step up DC-DC converter with very high switching frequency, fixed at 2MHz, providing a very small total solution for portable photo flash. The IS31BL3233A has separate Flash Mode and Torch Mode enable pins for maximum flexibility. The Flash Mode and Torch Mode LED current is programmed by external resistors respectively, making the flash LED solution simple to control. If both enable pins are at logic high, the LED current will be programmed by the Torch Mode setting resistor. The two LED output sinks can be shorted together externally for higher power single flash LEDs, up to 1.5A continuous LED current. Thermal regulation is integrated in Flash Mode to limit the IC's temperature and continuously provide the maximum allowed output current.

Various protection features are built into the IS31BL3233A, including cycle-by-cycle input current limit protection, output over-voltage protection, LED fault (open or short) protection and thermal shutdown protection. The IS31BL3233A is available in a RoHS compliant DFN-14 (2mm × 3mm) package.

FEATURES

- Input voltage range: 2.7V~5.5V
- Dual flash LED outputs
- Drive up to total 1.5A or 0.75A per channel
- 1s time out in Flash Mode to protect LED
- High efficiency up to 93% (1A, Flash Mode)
- 2MHz step-up converter
- Independent Flash Mode enable and Torch Mode enable pins
- Torch Mode dimming via PWM control
- Integrated thermal regulation control
- LED open/short protection
- Over-voltage protection
- Cycle-by-cycle inductor current limit
- Pb-free package: DFN-14 (2mm×3mm)
- -40C° ~ +85C° temperature range

APPLICATIONS

- Mobile phones
- Smart phones and PDAs
- Digital still cameras

TYPICAL APPLICATION CIRCUIT

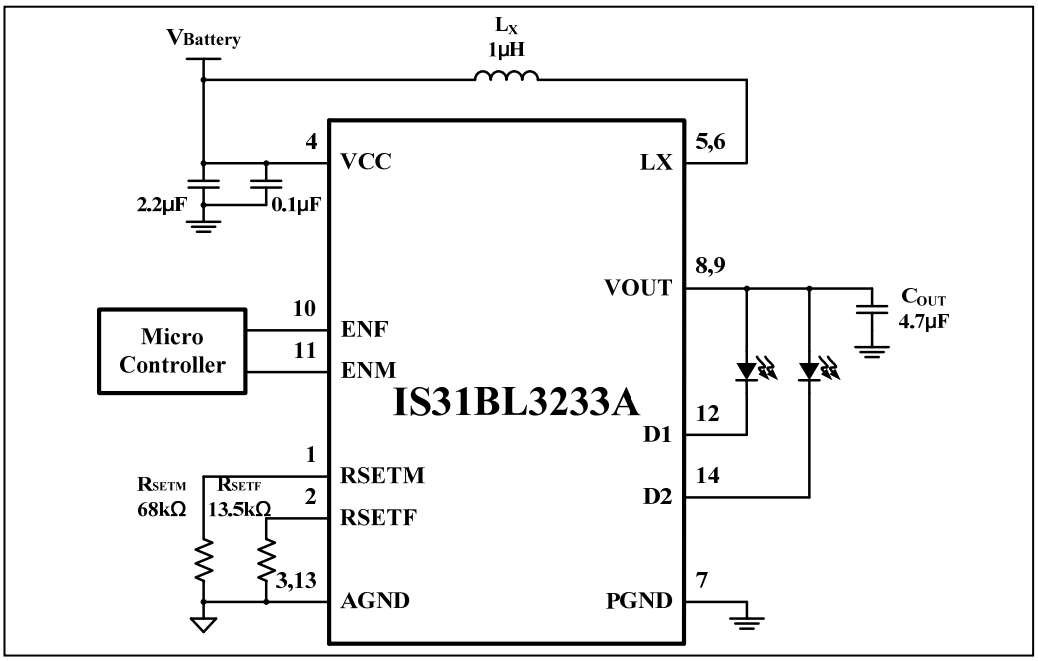

Figure 1 Typical Application Circuit (Torch Mode current is100mA and Flash Mode current is 500mA)

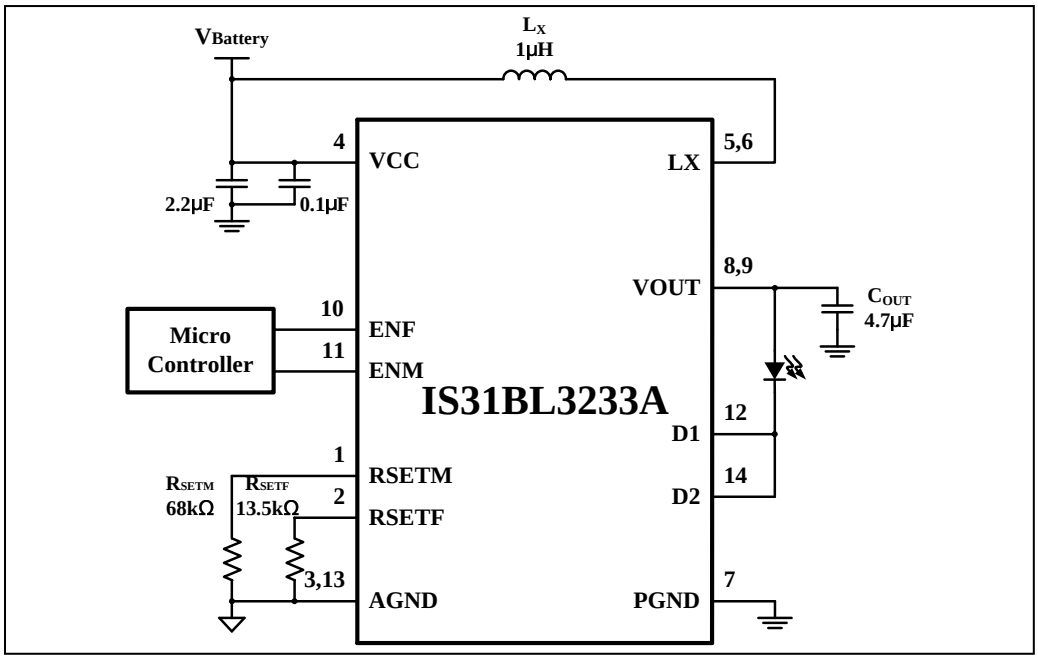

Figure 2 Typical Application Circuit (Drive single LED, Torch Mode current is 200mA and Flash Mode current is 1A)

PIN CONFIGURATION

Package	Pin Configurations (Top View)
DFN-14	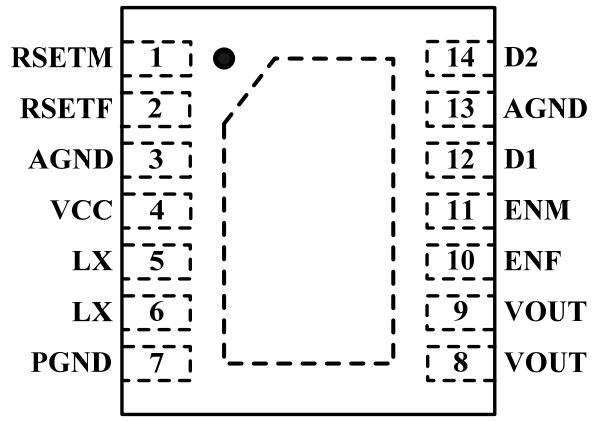

PIN DESCRIPTION

No.	Pin	Description
1	RSETM	Torch Mode current setting pin. $I_{D1} = I_{D2} = 6800/R_{SETM}$.
2	RSETF	Flash Mode current setting pin. $I_{D1} = I_{D2} = 6800/R_{SETF}$.
3, 13	AGND	Ground.
4	VCC	Supply voltage.
5, 6	LX	Switching node of the step-up converter.
7	PGND	Input clock for data shift on rising edge.
8, 9	VOUT	Output voltage pin.
10	ENF	Flash Mode enable pin. This pin has an internal 300kΩ pull down resistor to AGND.
11	ENM	Torch Mode enable pin. This pin has an internal 300kΩ pull-down resistor to AGND.
12	D1	Regulated output current sink 1, up to 0.75A current. Pins D1 and D2 can be connected together to sink 1.5A combined.
14	D2	Regulated output current sink 2, up to 0.75A current. Pins D1 and D2 can be connected together to sink 1.5A combined.
	Thermal Pad	Connect to GND.

ORDERING INFORMATION

Industrial Range: -40°C to +85°C

Order Part No.	Package	QTY/Reel
IS31BL3233A-DLS2-TR	DFN-14, Lead-free	2500

Copyright © 2014 Integrated Silicon Solution, Inc. All rights reserved. ISSI reserves the right to make changes to this specification and its products at any time without notice. ISSI assumes no liability arising out of the application or use of any information, products or services described herein. Customers are advised to obtain the latest version of this device specification before relying on any published information and before placing orders for products. Integrated Silicon Solution, Inc. does not recommend the use of any of its products in life support applications where the failure or malfunction of the product can reasonably be expected to cause failure of the life support system or to significantly affect its safety or effectiveness. Products are not authorized for use in such applications unless Integrated Silicon Solution, Inc. receives written assurance to its satisfaction, that:
a.) the risk of injury or damage has been minimized;
b.) the user assume all such risks; and
c.) potential liability of Integrated Silicon Solution, Inc is adequately protected under the circumstances

ABSOLUTE MAXIMUM RATINGS

Supply voltage, V_{CC}	−0.3V ~ +6.0V
Voltage at any input pin	−0.3V ~ V_{CC}+0.3V
Maximum junction temperature, T_{JMAX}	150°C
Storage temperature range, T_{STG}	−65°C ~ +150°C
Operating temperature range, T_A	−40°C ~ +85°C
ESD (HBM) ESD (CDM)	8kV 1kV

Note:
Stresses beyond those listed under "Absolute Maximum Ratings" may cause permanent damage to the device. These are stress ratings only and functional operation of the device at these or any other condition beyond those indicated in the operational sections of the specifications is not implied. Exposure to absolute maximum rating conditions for extended periods may affect device reliability.

ELECTRICAL CHARACTERISTICS

The following specifications apply for V_{CC} = 3.6V, T_A = 25°C, unless otherwise noted.

Symbol	Description	Condition	Min.	Typ.	Max.	Units
IC Supply						
V_{CC}	Input operating range		2.7		5.5	V
UVLO	Input under voltage lockout	Rising edge	2.1	2.4	2.68	V
$UVLO_{HYST}$	UVLO hysteresis			0.2		V
I_{CC}	Operating current	Not switching (R_{SETM} = 135kΩ)		1.0	1.5	mA
		Switching (R_{SETM} = 135kΩ)		1.8	2.6	mA
I_{SD}	Shutdown current	V_{ENF} = V_{ENM} = GND		0.1	1	μA
Step-Up Converter						
I_{LIM}	Peak NMOS current limit			3		A
f_{SW}	Oscillator frequency			2.0		MHz
D_{MAX}	Maximum duty cycle			75		%
V_{OVP}	Internal over voltage threshold of VOUT			5.3		V
t_S	Flash mode soft start time	R_{SETF} = 9.1kΩ (Note 1)		100		μs
Current Sink						
I_{OUT}	Total output current, Torch Mode	V_{ENM} = V_{CC}, R_{SETM} = 135kΩ, D1+D2	90	100	110	mA
	Total output current, Flash Mode	V_{ENF} = V_{CC} = 3.8V, V_{ENM} = GND, R_{SETF} = 9.1kΩ, D1+D2	1.305	1.5	1.695	A
ΔI_{OUT}	Output current matching (Note 2)	50mA/CH		2	10	%
		750m/CH		2	10	%
I_{SHORT}	LED short checking current			3.5		mA

ELECTRICAL CHARACTERISTICS (CONTINUE)

The following specifications apply for V_{CC} = 3.6V, T_A = 25°C, unless otherwise noted.

Symbol	Description	Condition	Min.	Typ.	Max.	Units
Control						
V_{IL}	ENF, ENM pin logic low threshold				0.4	V
V_{IH}	ENF, ENM pin logic high threshold		1.4			V
R_{PD_F}	ENF Internal pull-down Resistance			300		kΩ
R_{PD_M}	ENM Internal pull-down Resistance			300		kΩ
T_{OTP}	IC junction thermal shutdown threshold	(Note 1)		150		°C
T_{HYS}	IC junction thermal shutdown hysteresis	(Note 1)		20		°C

Note 1: Guarantee by design.

Note 2: The current matching between channels is defined as $\Delta I_{OUT} = \frac{|I_{D1} - I_{D2}|}{I_{D1} + I_{D2}}$.

TYPICAL PERFORMANCE CHARACTERISTICS

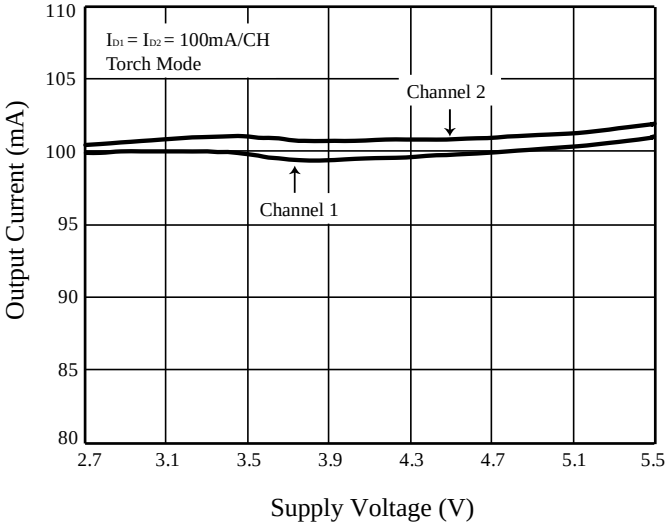

Figure 3 Supply Voltage vs. Output Current (Torch Mode)

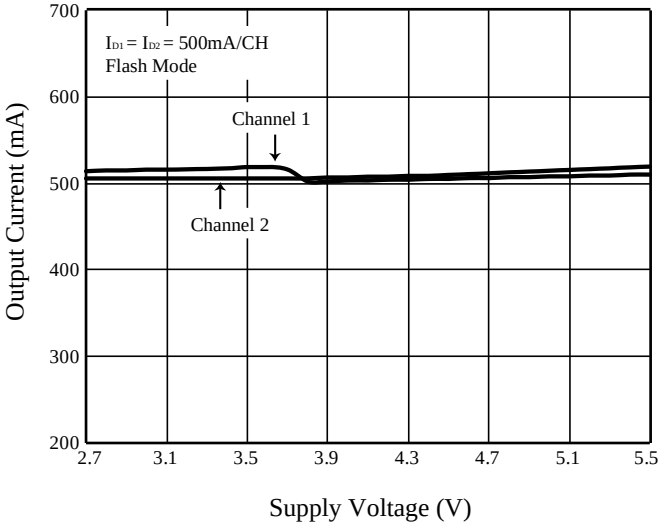

Figure 4 Supply Voltage vs. Output Current (Flash Mode)

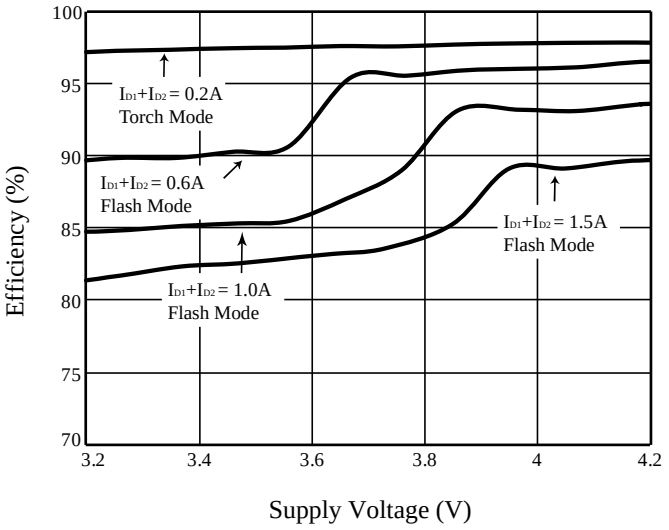

Figure 5 Boost Efficiency vs. Supply Voltage

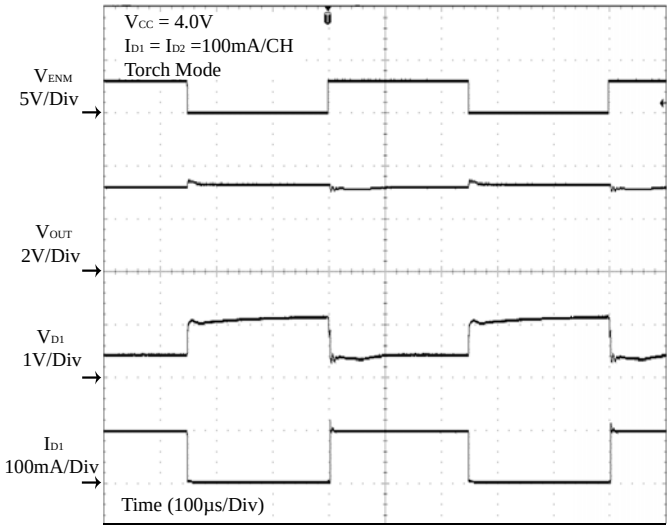

Figure 6 Torch Mode Turn On/Off

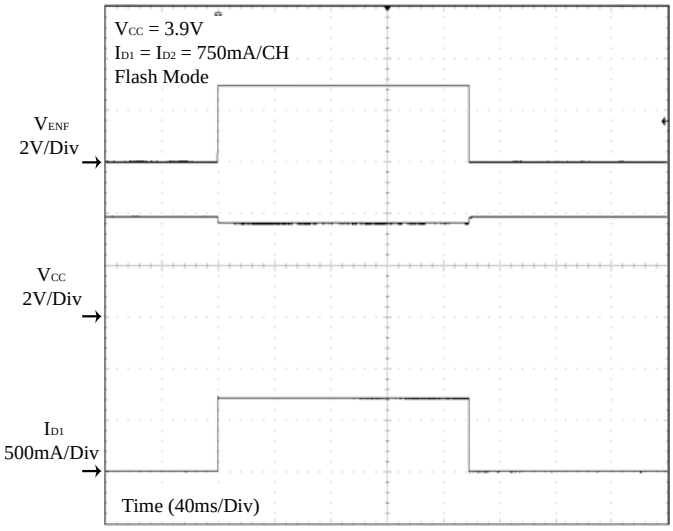

Figure 7 Flash Mode Operation

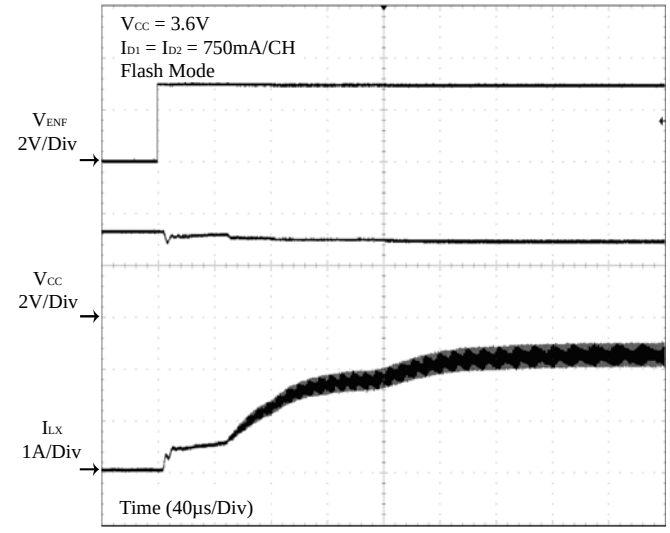

Figure 8 LX Current

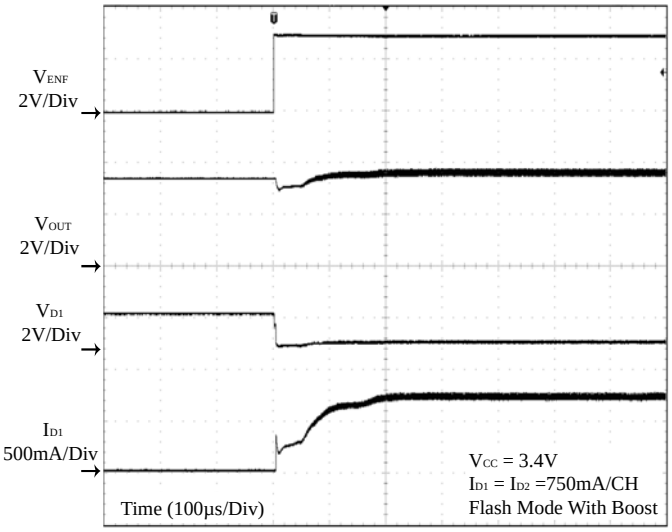

Figure 9 Flash Soft Start with Boost

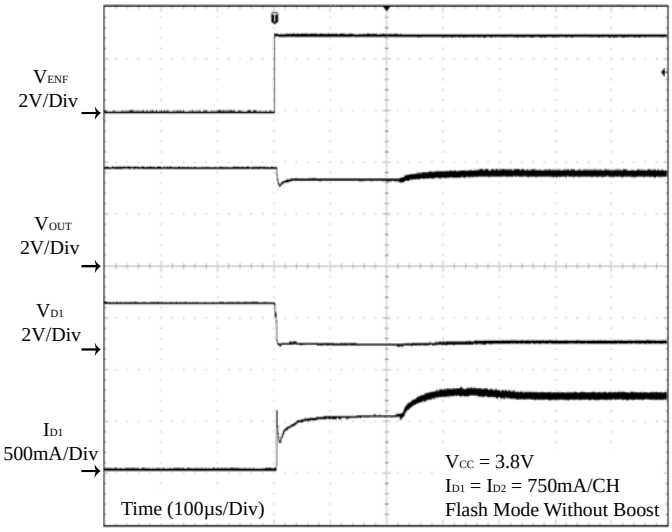

Figure 10 Flash Soft Start without Boost

FUNCTIONAL BLOCK DIAGRAM

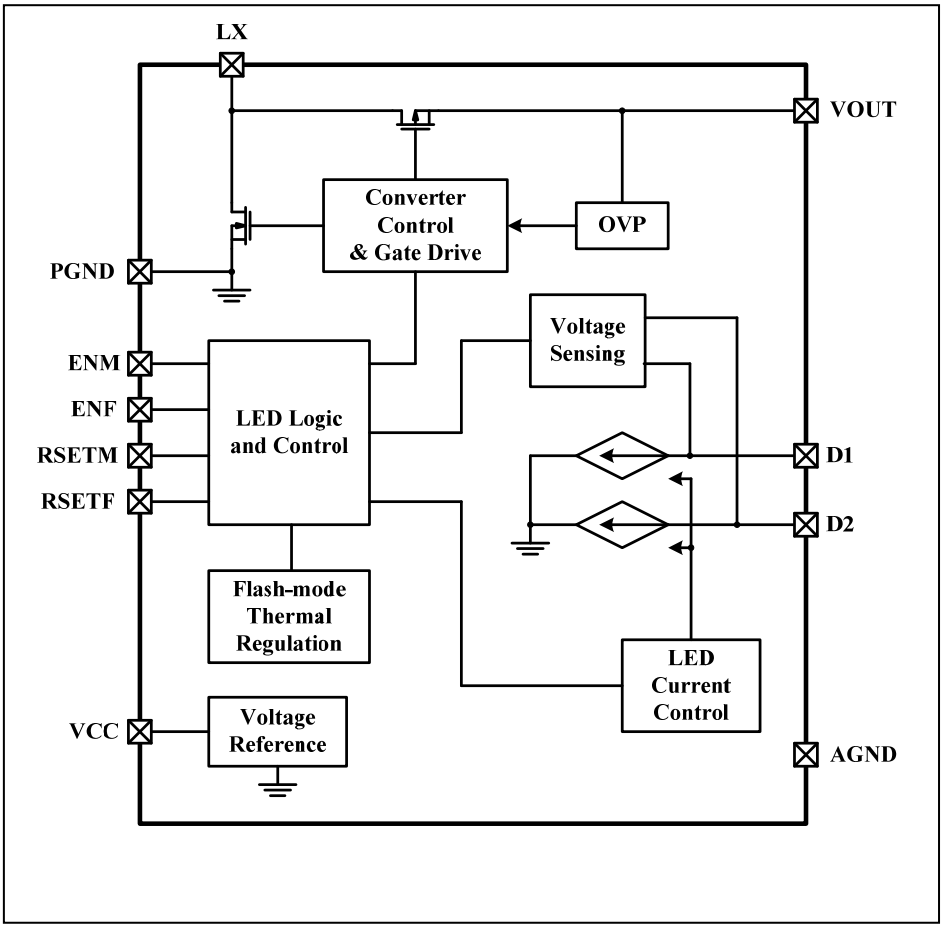

APPLICATION INFORMATION

FUNCTIONAL DESCRIPTION

The IS31BL3233A is a very high switching frequency step-up (boost) flash LED driver. Two current regulating devices are integrated to drive up to 2 flash LEDs.

The voltage step-up is accomplished by a boost topology, using an inductor-based DC-DC switching converter, in which the inductor serves as an energy storage device. By integrating optimized power MOSFETs, the IS31BL3233A internal switching frequency is 2.0MHz while still maintaining high power efficiency. Unlike a traditional DC-DC boost converter with a fixed output voltage, the IS31BL3233A dynamically changes its output voltage depending on the flash LED forward voltage and current. The use of unique control schemes maintains accurate current regulation in each of the two current sinks while leaving the output voltage at a minimum, increasing the overall conversion efficiency. The internal step-up converter boosts the output voltage high enough to drive the LEDs with the highest forward voltage. The two current sinks can be shorted together to drive a higher current single flash LED, sinking up to 1.5A combined.

The control interface is designed for maximum design flexibility and compatibility with various types of system controls. When the ENF is pulled high while the ENM is low, the LED current will be ramped up to the Flash Mode current level which is programmed by R_{SETF} resistor. When ENM is pulled high while the ENF is low, the LED current will be ramped up to the Torch Mode current level which is programmed by R_{SETM} resistor. However, if both ENM and ENF are high, the LED current will be set to Torch Mode current. The driver IC and the flash LEDs will be shutdown when both ENF and ENM are at logic low.

CURRENT SETTING

Flash Mode Current

The Flash Mode LED current can be programmed up to a maximum total current of 1.5A or up to 0.75A per channel. The sink current in D1 and D2 are internally matched in the IS31BL3233A. The Flash Mode current in each channel is set by the R_{SETF} resistor. For the desired Flash Mode current in each output, the resistor value can be calculated using the following Equation (1):

$$I_{D1} = I_{D2} = 6800 / R_{SETF} \qquad (1)$$

A flash event is initiated by asserting the ENF pin while ENM is at logic low level. A flash event is automatically terminated when ENF is deasserted or when ENM is asserted.

Automatic thermal regulation control is active when IS31BL3233A is in Flash Mode. If Flash Mode is enabled and the flash current is set to a high current value, the temperature of the IC can increase quickly. Once the IC's temperature goes above 100°C, the two sinks' currents will be automatically decreased according to the thermal regulation control loop. This can prevent the IC from triggering thermal shutdown and causing the LEDs to flicker. Depending on the thermal layout of the PCB and the Flash Mode current setting, the IS31BL3233A sink current can be lower than the programmed value due to the thermal regulation protection feature.

Torch Mode Current

The Torch Mode LED current can be programmed up to a maximum total current of 400mA or up to 200mA per channel. Just as in Flash Mode operation, the output currents in D1 and D2 are internally matched. The Torch Mode current in each channel is set by the R_{SETM} resistor. For the desired Torch Mode current in each output, the resistor value can be calculated using the following Equation (2):

$$I_{D1} = I_{D2} = 6800 / R_{SETM} \qquad (2)$$

A Torch Mode event is initiated by asserting the ENM pin. For additional flexibility, a lower Torch Mode current than the value calculated above can be realized by applying a PWM dimming signal at ENM pin while ENF is held low. The average Torch Mode current will be proportional to the PWM duty ratio.

SINGLE/DUAL LED APPLICATIONS

Each of the sinks' (D1 and D2) current is regulated and matched for applications requiring two LEDs. For single LED applications, D1 and D2 can be connected together to drive one LED (see Figure 11). The current per sink follows the Equations (1) and (2) in Current Setting sections above.

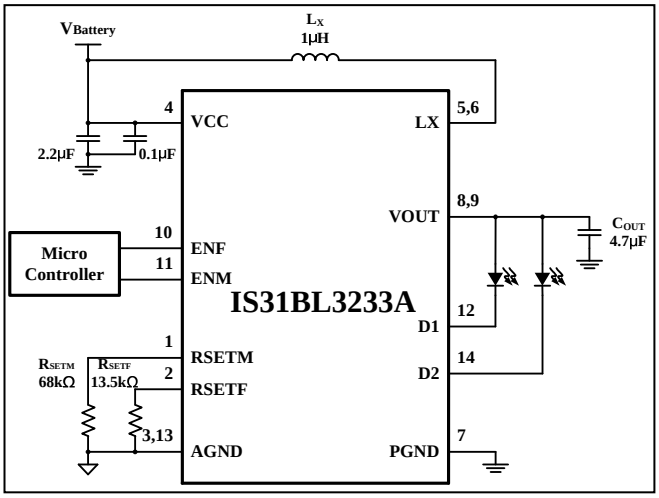

Figure 11 Single LED Application

LED SHORT PROTECTION

When the IS31BL3233A is enabled, there is a 2.5mA (Typ.) LED sensing current through each current sink. It is used to detect whether either LED is shorted by generating a voltage drop through each LED. The IC internally compares the voltage difference between VOUT and each sink node (D1 and D2). If this difference is below a preset threshold (Typ. 1.7V), the IC will treat the respective LED as shorted and disable its Flash/Torch Mode current through this LED channel. However, the 2.5mA sensing current will be kept to generate the LED's voltage drop. If the short circuit is removed during operation, the channel will automatically recover to the programmed current setting.

LED OPEN PROTECTION

In case of LED open, the open channel will control the loop first so that V_{OUT} will reach OVP, then IS31BL3233A will automatically detect which channel's LED is open and disable that channel. From that point, the other channel with properly operating LED will control the loop and V_{OUT} will be regulated down to a normal operating voltage. This protection feature avoids unnecessary power consumption in the current sink by regulating the output voltage at the lowest level possible to maintain regulation for the active channel. Not only does this protect from open LEDs failures, but also allows only single flash LED operation with the unused channel floating or open. Open-circuit LED fault protection is reset when the IC is powered down and up again.

INDUCTOR SELECTION

The IS31BL3233A is designed to use a 1.0μH to 4.7μH inductor. To prevent core saturation, ensure that the inductor-saturation current rating exceeds the peak inductor current for the application. The worst-case peak inductor current can be calculated with the following formula:

$$I_{PEAK(L)} = \frac{V_{OUT(MAX)} \times I_{LED(MAX)}}{0.8 \times V_{IN(MIN)}} + \frac{V_{IN(MIN)} \times t_{ON(MAX)}}{2 \times L} \quad (3)$$

where 0.8 is the estimated efficiency of 80%.

For example, for a 1.0A total (or 0.5A per channel) LED current, the peak inductor current for a 1.0uH inductor could be as high as (estimated 50% as the maximum duty ratio at the minimum input voltage, maximum LED forward voltage and maximum load current conditions):

$$I_{PEAK(L)} = \frac{4V \times 1A}{0.8 \times 3.5V} + \frac{3.5V \times 0.25}{2 \times 1} \approx 1.9A$$

If the inductor value is smaller, the inductor peak current will increase. To maintain stable operations for the boost converter, the inductor peak current must be less than both the IS31BL3233A current limit threshold and the inductor saturation current rating. Manufacturer's specifications of inductors list both the inductor DC current rating, which is a thermal limitation, and peak inductor current rating, which is determined by the saturation characteristics. Measurements at full load and high ambient temperature should be performed to ensure that the inductor does not saturate or overheat due to its parasitic resistance. Bench measurements are recommended to confirm actual inductor peak current I_{PEAK} and to ensure that the inductor does not saturate at maximum LED current and minimum input supply voltage.

CAPACITOR SELECTION

For good input voltage filtering low ESR ceramic capacitors are recommended. At least a 2.2μF input capacitor is recommended for high current flash LEDs to improve transient behavior of the regulator and EMI behavior of the total power supply circuit. The input capacitor should be placed as close as possible to the input pin and the PGND pin of the IS31BL3233A.

The output capacitance required depends on the required LED current. A 4.7μF ceramic capacitor works well in most situations, but a 1.0μF capacitor is acceptable for lower LED current conditions.

PCB LAYOUT

Due to the fast switching transitions and high-current paths, careful PC board layout is required. Connect AGND pin directly to the exposed paddle underneath the IC; connect the exposed paddle to the PCB ground plane. The output bypass capacitor should be placed as close to the IC as possible. Minimize trace lengths between the IC and the inductor, the input capacitor, and the output capacitor; keep these traces short, direct, and wide. The ground connections of C_{IN} and C_{OUT} should be as close together as possible and connected to PGND.

CLASSIFICATION REFLOW PROFILES

Profile Feature	Pb-Free Assembly
Preheat & Soak Temperature min (Tsmin) Temperature max (Tsmax) Time (Tsmin to Tsmax) (ts)	150°C 200°C 60-120 seconds
Average ramp-up rate (Tsmax to Tp)	3°C/second max.
Liquidous temperature (TL) Time at liquidous (tL)	217°C 60-150 seconds
Peak package body temperature (Tp)*	Max 260°C
Time (tp)** within 5°C of the specified classification temperature (Tc)	Max 30 seconds
Average ramp-down rate (Tp to Tsmax)	6°C/second max.
Time 25°C to peak temperature	8 minutes max.

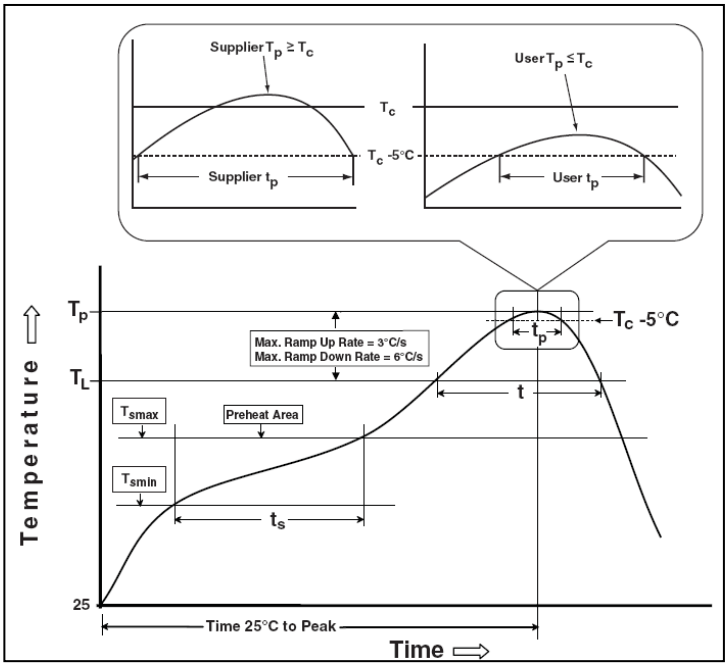

Figure 12 Classification Profile

PACKAGE INFORMATION

DFN-14

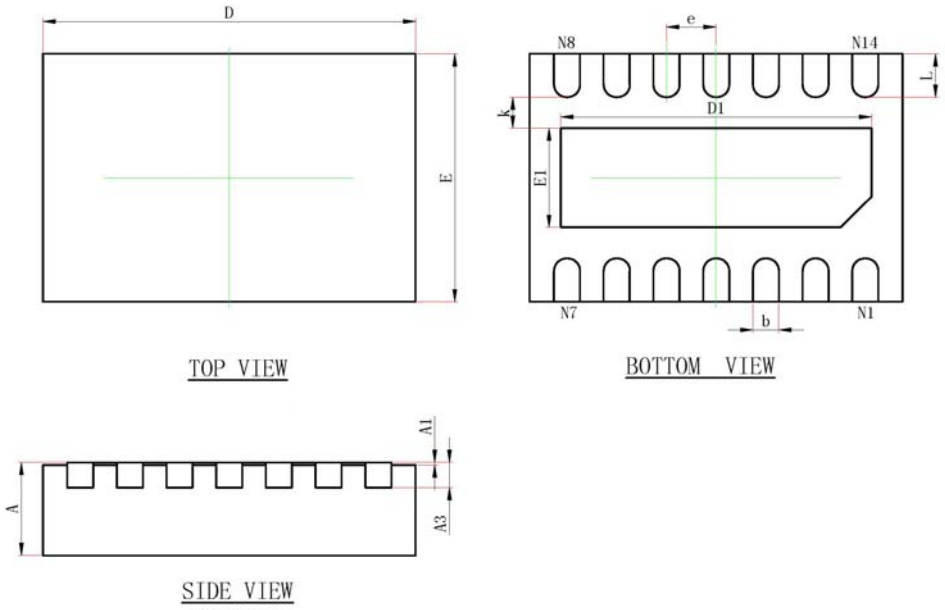

Symbol	Dimensions In Millimeters		Dimensions In Inches	
	Min.	Max.	Min.	Max.
A	0.700	0.800	0.028	0.031
A1	0.000	0.050	0.000	0.002
A3	0.203REF.		0.008REF.	
D	2.900	3.100	0.114	0.122
E	1.900	2.100	0.075	0.083
D1	2.400	2.600	0.094	0.102
E1	0.700	0.900	0.028	0.035
b	0.160	0.260	0.006	0.010
e	0.400REF.		0.016REF.	
k	0.200MIN.		0.008MIN.	
L	0.274	0.426	0.011	0.017