IS31AP4913

3D AND BASS ENHANCEMENT STEREO HEADPHONE DRIVER

December 2013

GENERAL DESCRIPTION

The IS31AP4913 is a stereo headphone driver designed to allow the removal of the output DC-blocking capacitors for reduced component count and cost. The IS31AP4913 is ideal for small portable electronics where size and cost are in concerns.

The IS31AP4913 also features 3D and bass enhancement which can be externally adjusted by a simple RC network.

IS31AP4913 is available in QFN-20 (3mm × 3mm) packages. It operates from 2.7V to 5.5V over the temperature range of -40°C to +85°C.

FEATURES

- No output DC-blocking capacitors
- Bass enhancement
- 3D enhancement
- Low output noise (8μV)
- High SNR (102dB)
- -92dB PSRR
- Pulse Count Control serial interface
- Thermal protection circuit
- Integrated click-and-pop suppression circuitry
- QFN-20 (3mm × 3mm) package

APPLICATIONS

- Cellular handsets and PDAs
- Notebook PC
- MP3
- Portable gaming

TYPICAL APPLICATION CIRCUIT

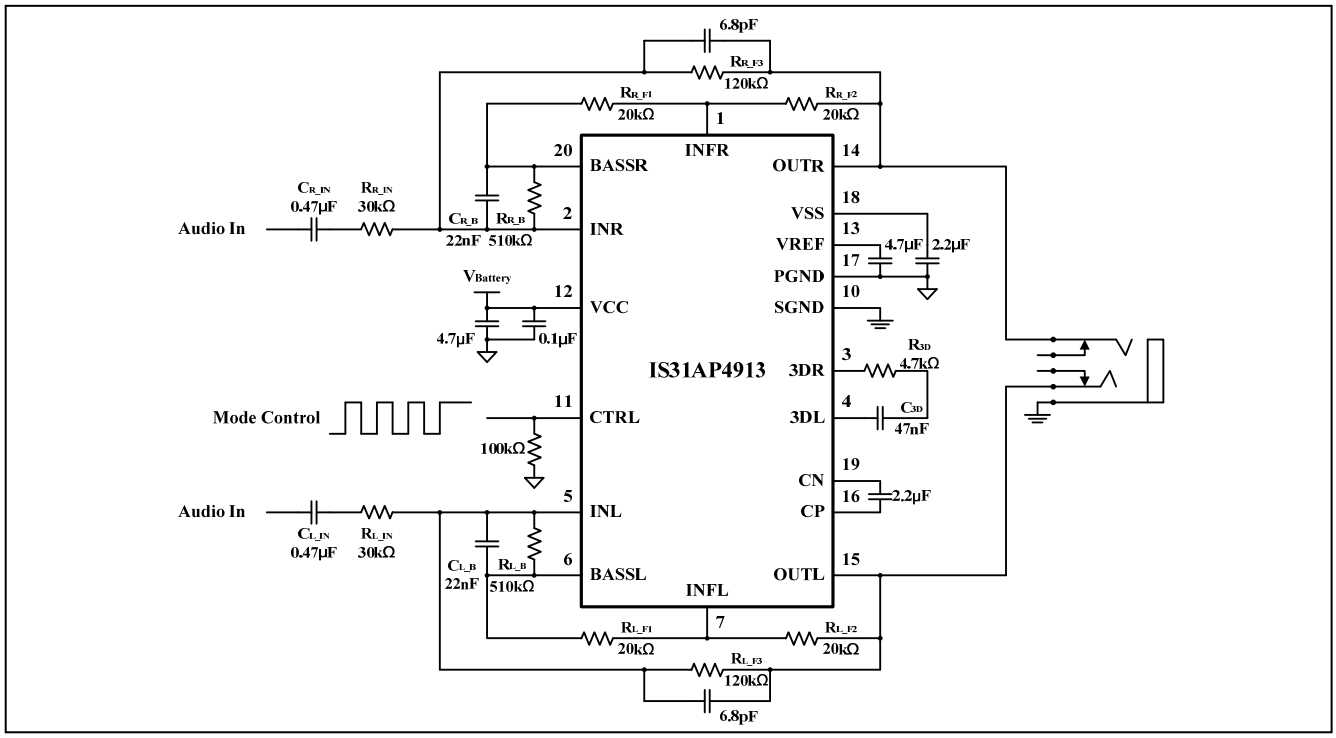

Figure 1 Typical Application Circuit

Note: The SGND and PGND pins of the IS31AP4913 must be routed separately back to the decoupling capacitor in order to provide proper device operation. If the SGND and PGND pins are connected directly to each other, the part will function without the risk of failure, but the noise and THD performance do not meet the specifications.

PIN CONFIGURATION

Package	Pin Configuration (Top View)
QFN-20	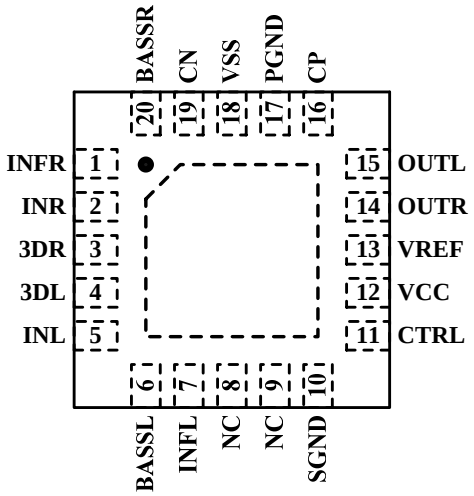

PIN DESCRIPTION

No.	Pin	Description
1	INFR	Right channel feedback loop in.
2	INR	Right channel audio input.
3	3DR	3D control input.
4	3DL	3D control input.
5	INL	Left channel audio input.
6	BASSL	Left channel bass control out.
7	INFL	Left channel feedback loop in.
8, 9	NC	No connection.
10	SGND	Signal Ground.
11	CTRL	Shutdown and 3D/Bass enable control terminal.
12	VCC	Supply voltage.
13	VREF	Internal produced supply voltage for charge pump and audio power amplifier.
14	OUTR	Right channel audio output.
15	OUTL	Left channel audio output.
16	CP	Charge pump flying capacitor positive terminal.
17	PGND	Power ground.
18	VSS	Output from charge pump.
19	CN	Charge pump flying capacitor negative terminal.
20	BASSR	Right channel bass control out.
	Thermal Pad	Connect to GND.

ORDERING INFORMATION

Industrial Range: -40°C to +85°C

Order Part No.	Package	QTY/Reel
IS31AP4913-QFLS2-TR	QFN-20, Lead-free	2500

Copyright © 2013 Integrated Silicon Solution, Inc. All rights reserved. ISSI reserves the right to make changes to this specification and its products at any time without notice. ISSI assumes no liability arising out of the application or use of any information, products or services described herein. Customers are advised to obtain the latest version of this device specification before relying on any published information and before placing orders for products. Integrated Silicon Solution, Inc. does not recommend the use of any of its products in life support applications where the failure or malfunction of the product can reasonably be expected to cause failure of the life support system or to significantly affect its safety or effectiveness. Products are not authorized for use in such applications unless Integrated Silicon Solution, Inc. receives written assurance to its satisfaction, that:
a.) the risk of injury or damage has been minimized;
b.) the user assume all such risks; and
c.) potential liability of Integrated Silicon Solution, Inc is adequately protected under the circumstances

ABSOLUTE MAXIMUM RATINGS

Supply voltage, V_{CC}	−0.3V ~ +6.0V
Voltage at any input pin	−0.3V ~ V_{CC}+0.3V
Maximum junction temperature, T_{JMAX}	150°C
Storage temperature range, T_{STG}	−65°C ~ +150°C
Operating temperature range, T_A	−40°C ~ +85°C
ESD (HBM) ESD (CDM)	5kV 1kV

Note:
Stresses beyond those listed under "Absolute Maximum Ratings" may cause permanent damage to the device. These are stress ratings only and functional operation of the device at these or any other condition beyond those indicated in the operational sections of the specifications is not implied. Exposure to absolute maximum rating conditions for extended periods may affect device reliability.

ELECTRICAL CHARACTERISTICS

V_{CC} = 2.7V ~ 5.5V, T_A = 25°C, unless otherwise noted. Typical value is T_A = 25°C, V_{CC} = 3.6V.

Symbol	Parameter	Condition	Min.	Typ.	Max.	Unit
V_{CC}	Supply voltage		2.7		5.5	V
I_{CC}	Quiescent current	No load		3	5.5	mA
I_{SD}	Shutdown current	V_{SDB} = 0V			1	μA
f_{OSC}	Operating frequency			250		kHz
$\|V_{OS}\|$	Output offset voltage	V_{IN} = 0V		1		mV
V_{IH}	High-level input voltage		1.4			V
V_{IL}	Low-level input voltage				0.4	V

ELECTRICAL CHARACTERISTICS *(Note 1)*

T_A = 25°C, V_{CC} = 3.6V, unless otherwise noted.

Symbol	Parameter	Condition	Min.	Typ.	Max.	Unit
P_O	Output power	THD+N = 1%, R_L = 32Ω, f = 1kHz		30		mW
THD+N	Total harmonic distortion plus noise	P_O = 20mW, R_L = 32Ω, f = 1kHz		0.05		%
t_{WU}	Wake-up time from shutdown			39		ms
PSRR	Power supply rejection ratio	V_{P-P} = 200mV, R_L = 32Ω, f = 217Hz		-92		dB
		V_{P-P} = 200mV, R_L = 32Ω, f = 1kHz		-90		dB
V_{NO}	Output voltage noise			8		μV
SNR	Signal-to-noise ratio	P_O = 30mW, THD+N = 1%		102		dB
t_{LO}	Mode control low time		1		10	μs
t_{HI}	Mode control high time		1		10	μs
t_{OFF}	CTRL off time for shutdown		200			μs

Note 1: Guaranteed by design.

TYPICAL PERFORMANCE CHARACTERISTIC

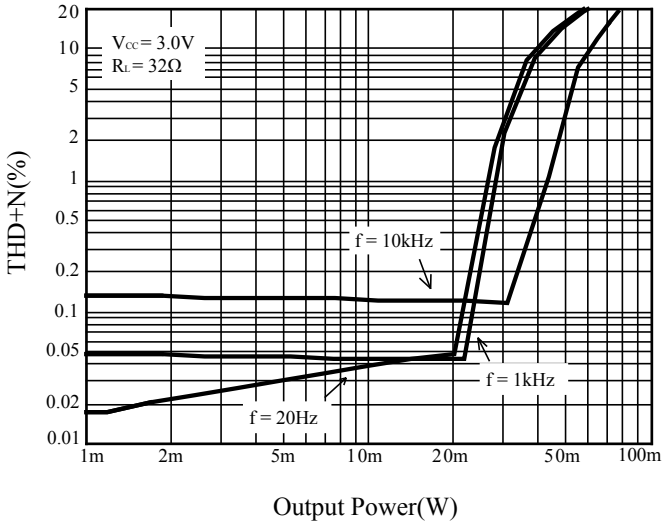

Figure 2 THD+N vs. Output Power

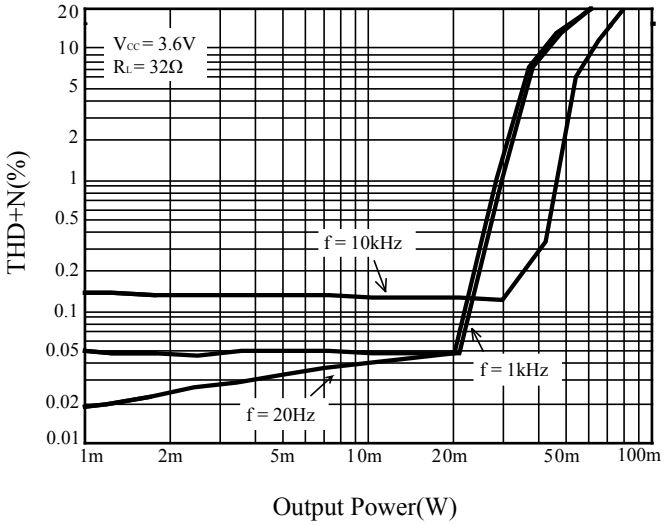

Figure 3 THD+N vs. Output Power

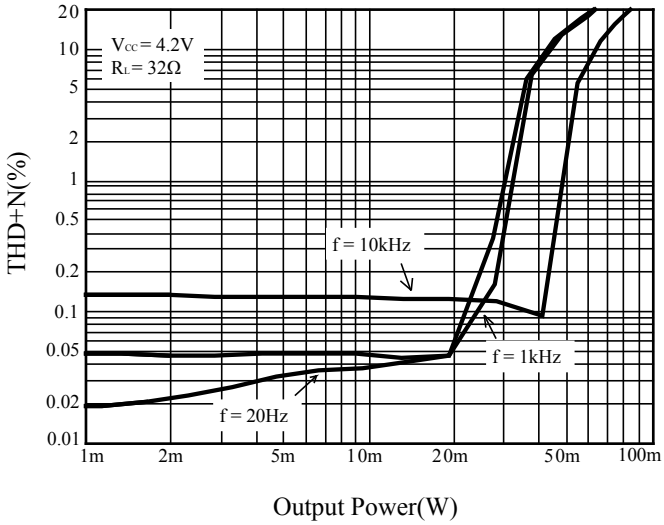

Figure 4 THD+N vs. Output Power

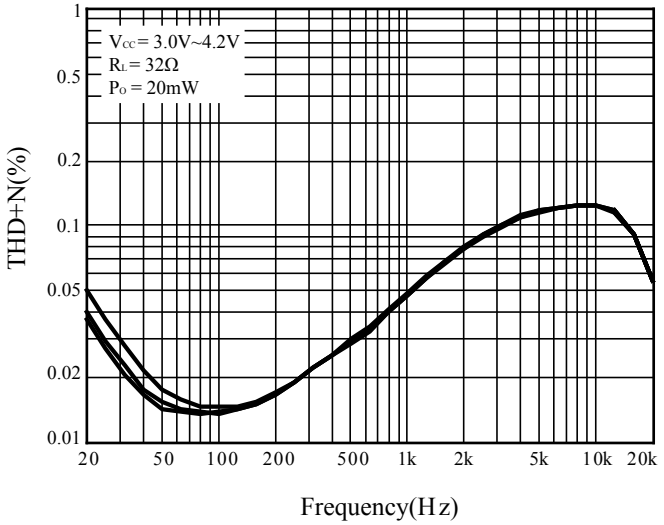

Figure 5 THD+N vs. Frequency

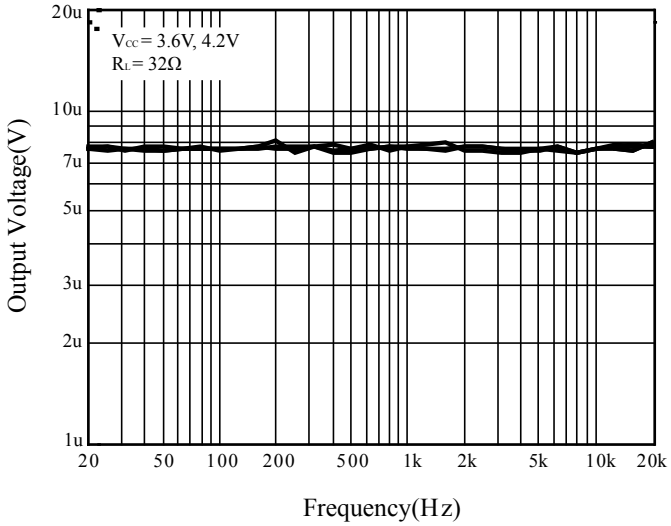

Figure 6 Noise

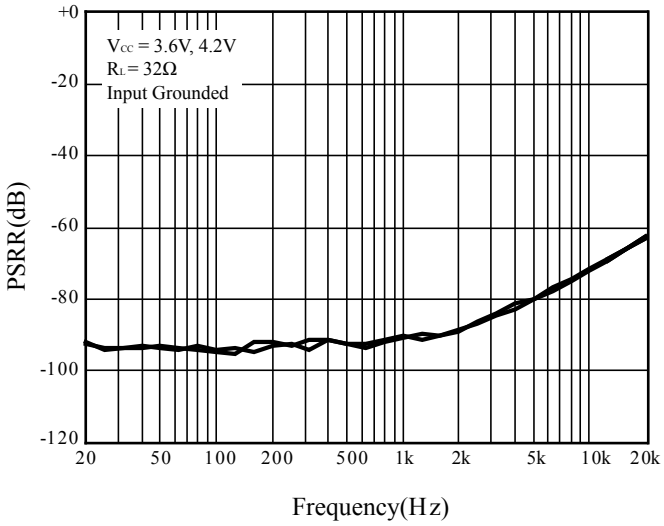

Figure 7 PSRR vs. Frequency

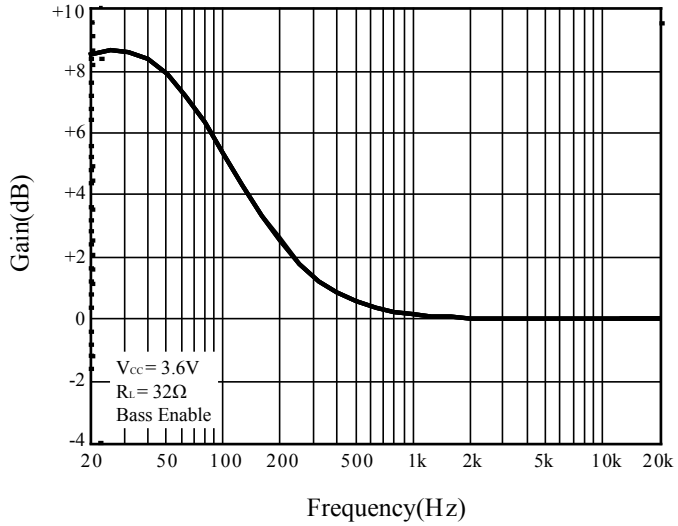

Figure 8 Gain vs. Frequency (Bass Enable Mode)

FUNCTIONAL BLOCK DIAGRAM

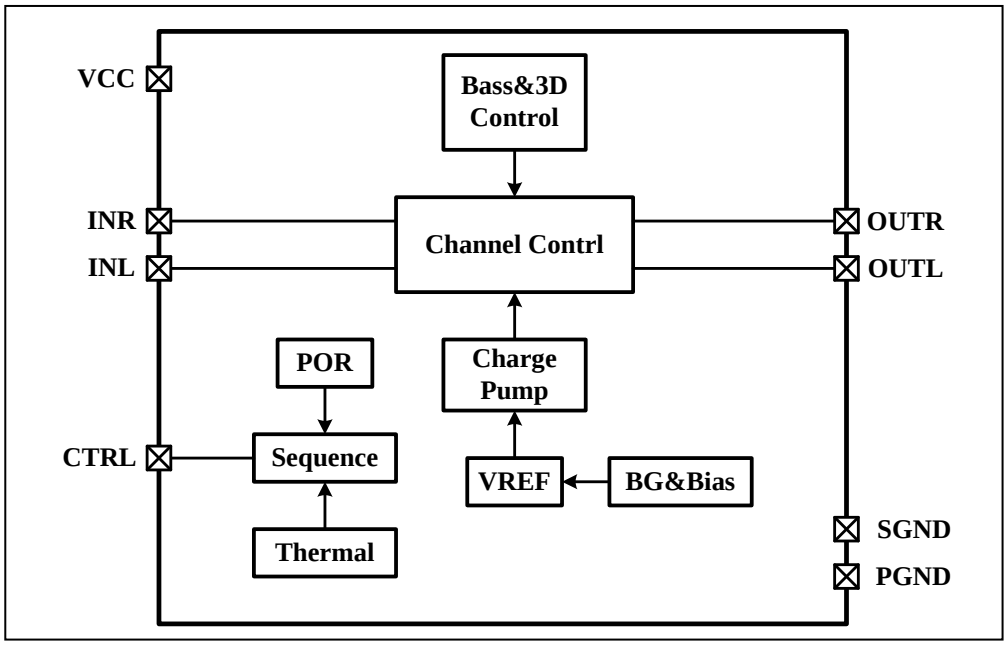

APPLICATION INFORMATION

GENERAL DESCRIPTION

The IS31AP4913 is a high quality stereo headphone driver with 3D and bass enhancement.

OPERATING MODE

The operating mode is controlled by Pulse Count Control (PCC wire) serial interface. The interface records rising edges of the CTRL pin and decodes them into 4 operating mode (Figure 9).

If the CTRL pin is pulled to high, receiving one rising edge, the IC starts up and operates in Mode 1. If the CTRL pin receives two rising edges, the IC operates in Mode 2. If the CTRL pin receives three rising edges, the IC operates in Mode 3. If the CTRL pin receives four rising edges, the IC operates in Mode 4.

Mode 1—IC starts up, basic operating mode.

Mode 2—IC starts up, enable 3D enhance function.

Mode 3—IC starts up, enable bass enhance function.

Mode 4—IC starts up, enable 3D and bass enhance function.

If the CTRL pin is pulled to low last at least 200μs, the IC will be into shutdown mode.

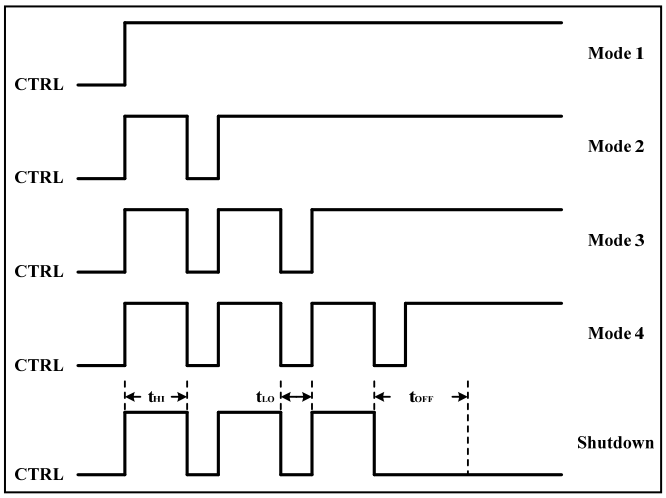

Figure 9 Operating Mode Selected

CHARGE PUMP CONVERTER

IS31AP4913 integrates a charge pump converter to change input supply voltage (VCC) into a negative voltage providing a 0V reference for the output.

The charge pump converter only needs three external components: supply decoupling capacitor, output bypass capacitor and flying capacitor.

Choose low ESR capacitors to ensure the best operating performance and place the capacitors as close as possible to the IS31AP4913.

GAIN SETTING

The input resistors (R_{IN}) and feedback resistors (R_F) set the gain of the amplifier according to Equation (1).

$$Gain = \frac{R_F}{R_{IN}}\left(\frac{V}{V}\right) \qquad (1)$$

The R_F is given by Equation (2) below:

$$R_F = \frac{(R_{F1} + R_{F2})R_{F3}}{R_{F1} + R_{F2} + R_{F3}} \qquad (2)$$

For example, in Figure 1:

R_{F1} = 20kΩ, R_{F2} = 20kΩ, R_{F3} = 120kΩ, R_{IN} = 30kΩ,

therefore, $R_F = \frac{(20+20)\times 120}{20+20+120} = 30k\Omega$

$$Gain = \frac{30}{30} = 1\left(\frac{V}{V}\right)$$

Resistor matching is very important in fully differential amplifiers. The balance of the output on the reference voltage depends on matched ratios of the resistors. CMRR, PSRR, and cancellation of the second harmonic distortion diminish if resistor mismatch occurs. Therefore, it is recommended to use 1% tolerance resistors or better to keep the performance optimized. Matching is more important than overall tolerance. Resistor arrays with 1% matching can be used with a tolerance greater than 1%.

Place the input resistors very close to the IS31AP4913 to limit noise injection on the high-impedance nodes.

BASS AUDIO ENHANCEMENT EFFECT

When the bass enhancement is enabled, the low frequency input signal will be amplified (Figure 8). The cutoff frequency is f_B. The signal below f_B will be enhanced. f_B is given by Equation (3):

$$f_B = \frac{1}{2\pi(R_{F1} + R_{F2})C_B} \qquad (3)$$

For example, in Figure 1:

R_{F1} = 20kΩ, R_{F2} = 20kΩ, C_B = 22nF,

so, $f_B = \frac{1}{2\pi \times (20k\Omega + 20k\Omega)\times 22nF} \approx 181Hz$

The capacitors should have a tolerance of ±10% or better, because any mismatch in capacitance causes an impedance mismatch at the startup frequency and below.

3D AUDIO ENHANCEMENT EFFECT

The 3D audio enhancement effect can be adjusted by the resistor, R_{3D}. Decreasing the resistor size will make the 3D effect more pronounced and decreasing the capacitor size will raise the cutoff frequency for the effect.

The cutoff frequency, f_{3D}, is determined by Equation (4):

$$f_{3D} = \frac{1}{2\pi R_{3D} C_{3D}} \qquad (4)$$

For example, in Figure 1:

R_{3D} = 4.7kΩ, C_{3D} = 47nF,

so, $f_{3D} = \frac{1}{2\pi \times 4.7k\Omega \times 47nF} \approx 721Hz$

Setting f_{3D} below 1kHz is recommended to get better 3D enhancement.

INPUT CAPACITOR (C_{IN})

The input capacitors and input resistors form a high pass filter with the corner frequency, f_C, determined in Equation (5).

$$f_c = \frac{1}{2\pi R_{IN} C_{IN}} \qquad (5)$$

For example, in Figure 1:

R_{IN} = 30kΩ, C_{IN} = 0.47μF,

therefore, $f_c = \frac{1}{2\pi \times 30k\Omega \times 0.47\mu F} \approx 11Hz$

The value of the input capacitor is important to consider as it directly affects the bass (low frequency) performance of the circuit. The capacitors should have a tolerance of ±10% or better, because any mismatch in capacitance causes an impedance mismatch at the corner frequency and below.

DESIGN NOTE

COMPONENT SELECTION

The value and ESR of the output capacitor for charge pump will affect output ripple and transient performance. A X7R or X5R ceramic capacitor in 2.2μF is recommended. The flying capacitor should be a 2.2μF X7R or X5R ceramic capacitor.

All capacitors should support at least 10V.

PCB LAYOUT

The decoupling capacitors should be placed close to the VCC pin and the output capacitors should be placed close to the VSS pin. The flying capacitor should be placed close to the CN and CP pins. The input capacitors and input resistors should be placed close to the INR and INL pins and the traces must be parallel to prevent noise. The traces of OUTR and OUTL pins connected to the headphone should be as short and wide as possible. The recommended width is 0.5mm.

Trace width should be at least 0.75mm for the power supply and the ground plane. The thermal pad and the PGND pin should connect directly to a strong common ground plane for heat sinking.

The SGND and PGND pins of the IS31AP4913 must be routed separately back to the decoupling capacitor in order to provide proper device operation. If the SGND and PGND pins are connected directly to each other, the part functions without risk of failure, but the noise and THD performance will not meet the specifications.

CLASSIFICATION REFLOW PROFILES

Profile Feature	Pb-Free Assembly
Preheat & Soak Temperature min (Tsmin) Temperature max (Tsmax) Time (Tsmin to Tsmax) (ts)	150°C 200°C 60-120 seconds
Average ramp-up rate (Tsmax to Tp)	3°C/second max.
Liquidous temperature (TL) Time at liquidous (tL)	217°C 60-150 seconds
Peak package body temperature (Tp)*	Max 260°C
Time (tp)** within 5°C of the specified classification temperature (Tc)	Max 30 seconds
Average ramp-down rate (Tp to Tsmax)	6°C/second max.
Time 25°C to peak temperature	8 minutes max.

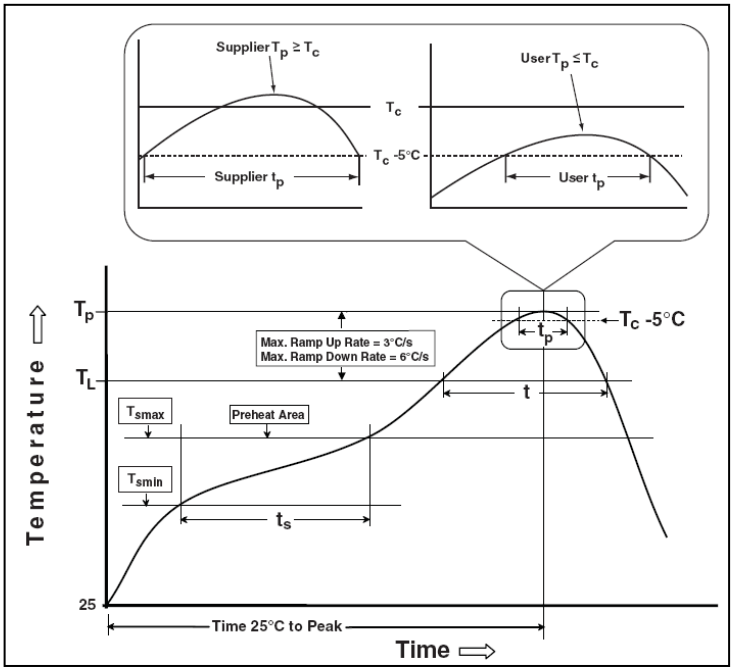

Figure 10 Classification Profile

PACKAGING INFORMATION

QFN-20

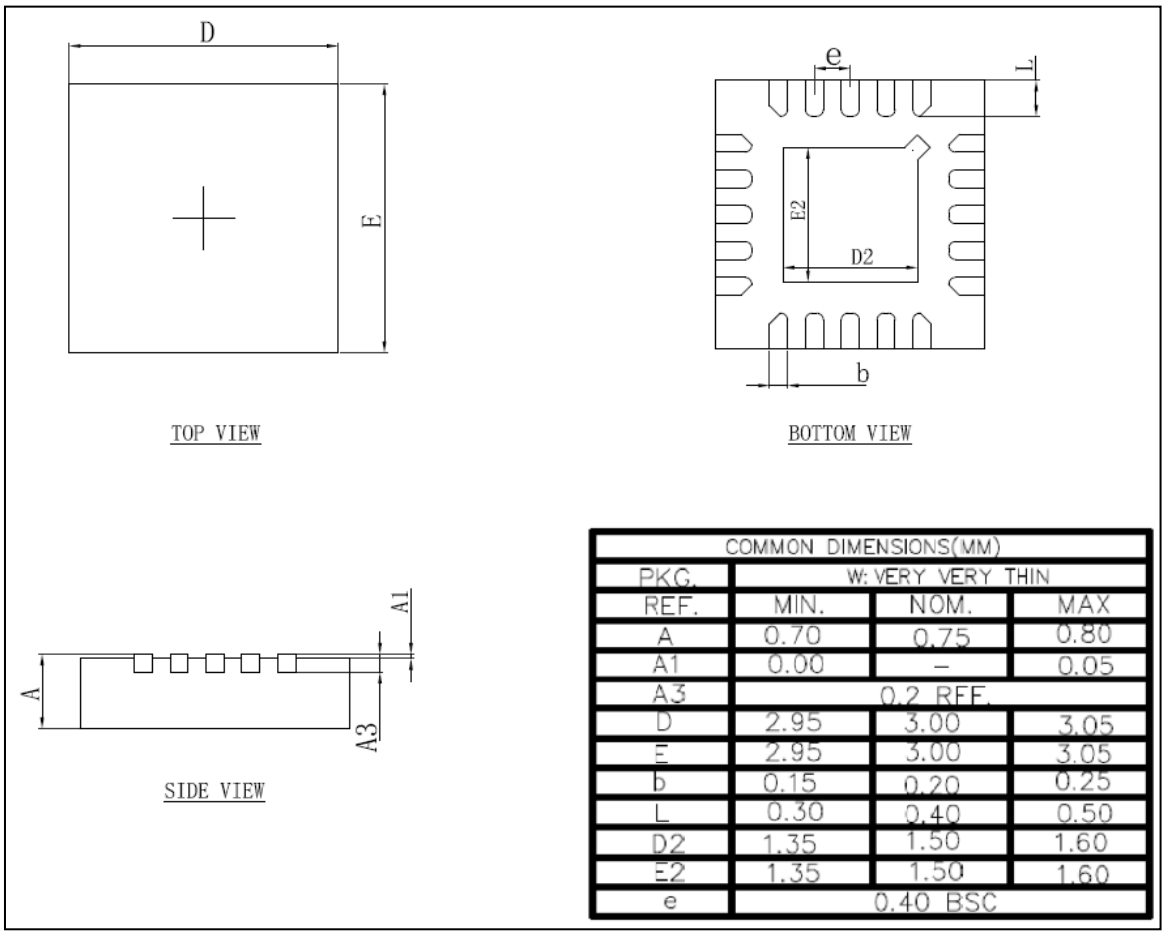

COMMON DIMENSIONS(MM)			
PKG.	W: VERY VERY THIN		
REF.	MIN.	NOM.	MAX
A	0.70	0.75	0.80
A1	0.00	–	0.05
A3	0.2 REF.		
D	2.95	3.00	3.05
E	2.95	3.00	3.05
b	0.15	0.20	0.25
L	0.30	0.40	0.50
D2	1.35	1.50	1.60
E2	1.35	1.50	1.60
e	0.40 BSC		

Note: All dimensions in millimeters unless otherwise stated.