IS31AP4833

TREBLE AND BASS CONTROL WITH 3D ENHANCEMENT AUDIO POWER DRIVER

March 2014

GENERAL DESCRIPTION

The IS31AP4833 is a treble and bass control with 3D enhancement audio power driver. The IS31AP4833 provides tone (bass and treble) controls and volume control as well as a stereo audio power amplifier capable of delivering 2.8W into 4Ω with less than 10% THD with a 5V supply.

The IS31AP4833 uses flexible I2C control interface for multiple application requirements. It also features 3D sound circuitry which can be externally adjusted via a simple RC network.

The IS31AP4833 features a 13 steps tone control (-12dB ~ +12dB, 2dB/step) and a 29 steps volume control (mute, -42dB ~ +12dB, 2dB/step) for the headphone and stereo outputs. The volume and tone are controlled through an I2C compatible interface. The IS31AP4833 can get independent volume control for two channels.

IS31AP4833 is available in QFN-36 (4mm × 4mm) and TQFP-48(7mm × 7mm) package. It operates from 3.0V to 5.5V over the temperature range of -40°C to +85°C.

FEATURES

- 3.0V to 5.5V supply
- Mute control
- Treble and bass control
- Independent volume control for two channels
- Stereo input MUX
- I2C control interface
- 3D enhancement
- Thermal shutdown protection
- Click-and-pop suppression
- QFN-36(4mm × 4mm) and TQFP-48(7mm × 7mm) package

APPLICATIONS

- Cell phones, PDA, MP4, PMP
- Portable and desktop computers
- Desktops audio system
- Multimedia monitors

TYPICAL APPLICATION CIRCUIT

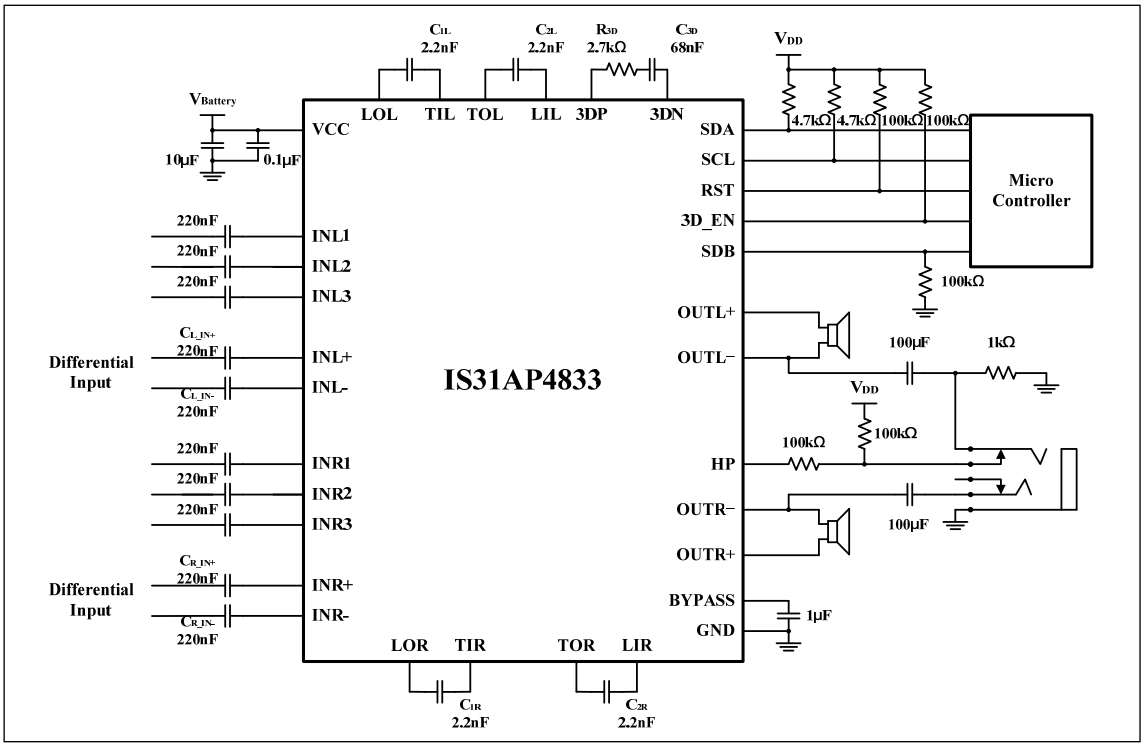

Figure 1 Typical Application Circuit

PIN CONFIGURATION

Package	Pin Configuration (Top View)
QFN-36	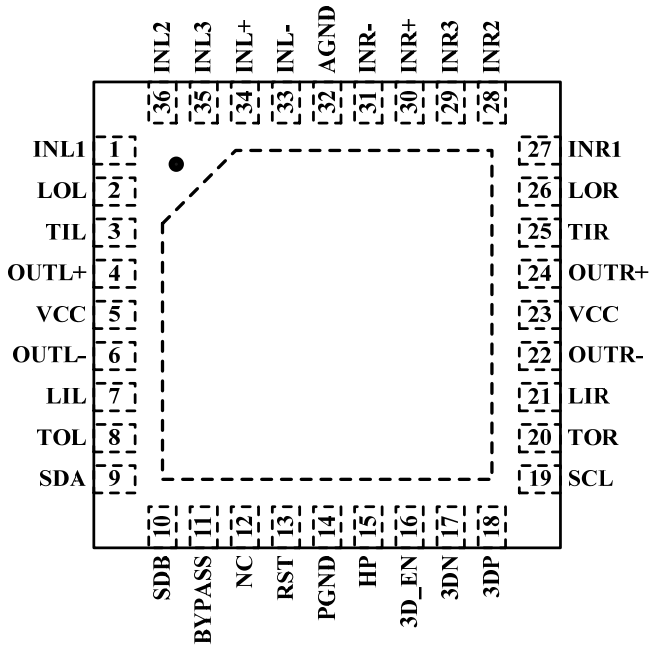
TQFP-48	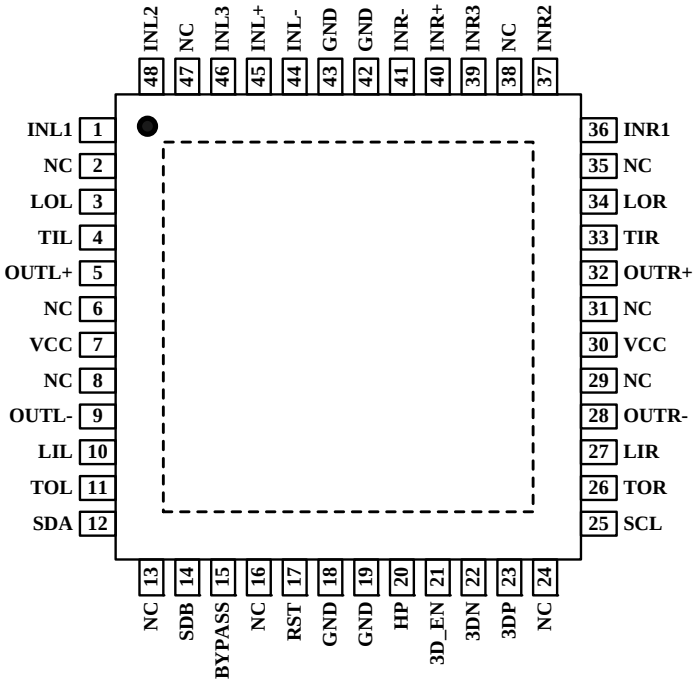

PIN DESCRIPTION

No.		Pin	Description
QFN-36	TQFP-48		
1	1	INL1	Left channel single-ended input1.
2	3	LOL	Left channel tone control loop out.
3	4	TIL	Left channel tone control in.
4	5	OUTL+	Positive output of left channel.
5, 23	7,30	VCC	Power supply.
6	9	OUTL-	Negative output of left channel.
7	10	LIL	Left channel tone control loop in.
8	11	TOL	Left channel tone control out.
9	12	SDA	I2C serial data.
10	14	SDB	It will into shutdown mode when pull low.
11	15	BYPASS	Bypass capacitor which provides the common mode voltage.
12	2,6,8,13,16,24, 29,31,35,38,47	NC	No connection.
13	17	RST	Reset chip logic and states. Active low.
14,32	18,19,42,43	GND	Ground.
15	20	HP	Detect HP insert or not.
16	21	3D_EN	It will into 3D enhance mode when pull high.
17	22	3DN	Negative channel 3D input.
18	23	3DP	Positive channel 3D input.
19	25	SCL	I2C serial clock.
20	26	TOR	Right channel tone control out.
21	27	LIR	Right channel tone control loop in.
22	28	OUTR-	Negative output of right channel.
24	32	OUTR+	Positive output of right channel.
25	33	TIR	Right channel tone control in.
26	34	LOR	Right channel tone control loop out.
27	36	INR1	Right channel single-ended input1.
28	37	INR2	Right channel single-ended input2.
29	39	INR3	Right channel single-ended input3.
30	40	INR+	Right channel positive differential input.
31	41	INR-	Right channel negative differential input.
33	44	INL-	Left channel negative differential input.
34	45	INL+	Left channel positive differential input.
35	46	INL3	Left channel single-ended input3.
36	48	INL2	Left channel single-ended input2.
		Thermal Pad	Connect to GND.

ORDERING INFORMATION
INDUSTRIAL RANGE: -40°C TO +85°C

Order Part No.	Package	QTY
IS31AP4833-QFLS2-TR	QFN-36, Lead-free	2500/Reel
IS31AP4833-TQLS2	TQFP-48, Lead-free	250/Tray

Copyright © 2014 Integrated Silicon Solution, Inc. All rights reserved. ISSI reserves the right to make changes to this specification and its products at any time without notice. ISSI assumes no liability arising out of the application or use of any information, products or services described herein. Customers are advised to obtain the latest version of this device specification before relying on any published information and before placing orders for products.
Integrated Silicon Solution, Inc. does not recommend the use of any of its products in life support applications where the failure or malfunction of the product can reasonably be expected to cause failure of the life support system or to significantly affect its safety or effectiveness. Products are not authorized for use in such applications unless Integrated Silicon Solution, Inc. receives written assurance to its satisfaction, that:
a.) the risk of injury or damage has been minimized;
b.) the user assume all such risks; and
c.) potential liability of Integrated Silicon Solution, Inc is adequately protected under the circumstances

ABSOLUTE MAXIMUM RATINGS

Supply voltage, V_{CC}	−0.3V ~ +6.0V
Voltage at any input pin	−0.3V ~ V_{CC}+0.3V
Maximum junction temperature, T_{JMAX}	150°C
Storage temperature range, T_{STG}	−65°C ~ +150°C
Operating temperature range, T_A	−40°C ~ +85°C
ESD (HBM) ESD (CDM)	8kV 1kV

Note:
Stresses beyond those listed under "Absolute Maximum Ratings" may cause permanent damage to the device. These are stress ratings only and functional operation of the device at these or any other condition beyond those indicated in the operational sections of the specifications is not implied. Exposure to absolute maximum rating conditions for extended periods may affect device reliability.

ELECTRICAL CHARACTERISTICS

T_A = 25°C, unless otherwise noted. Typical value are T_A = 25°C, V_{CC} = 3.6V.

Symbol	Parameter	Condition	Min.	Typ.	Max.	Unit
V_{CC}	Supply voltage		3.0		5.5	V
I_{SD}	Shutdown current	V_{SDB} = 0V		1		μA
		V_{SDB} = V_{CC}, software shutdown		1		
I_{CC}	Quiescent power supply current	V_{IN} = 0V, I_O = 0A, V_{HP} = 0V, no load		6		mA
		V_{IN} = 0V, I_O = 0A, V_{HP} = 5V, no load		4		
V_{IH_HP}	HP input high-voltage	V_{CC} = 5.0V	4.1			V
		V_{CC} = 3.0V	2.3			
V_{IL_HP}	HP input low-voltage	V_{CC} = 5.0V			3.4	V
		V_{CC} = 3.0V			1.54	
V_{IH}	Input high-voltage		1.4			V
V_{IL}	Input low-voltage				0.4	V

AC CHARACTERISTICS *(Note 1)*

T_A = 25°C, V_{CC} = 5.0V, unless otherwise noted.

Symbol	Parameter	Condition	Min.	Typ.	Max.	Unit
Po	Output power	THD+N = 10%, f = 1kHz, R_L = 4Ω, speaker		2.80		W
		THD+N = 1%, f = 1kHz, R_L = 4Ω, speaker		2.20		
		THD+N = 10%, f = 1kHz, R_L = 8Ω, speaker		1.75		
		THD+N = 1%, f = 1kHz, R_L = 8Ω, speaker		1.45		
		THD+N = 10%, f = 1kHz, R_L = 32Ω, headphone		0.11		
		THD+N = 1%, f = 1kHz, R_L = 32Ω, headphone		0.091		
THD+N	Total harmonic distortion plus noise	P_O = 1.5W, f = 1kHz, R_L = 4Ω, speaker		0.069		%
		P_O = 0.9W, f = 1kHz, R_L = 8Ω, speaker		0.046		
		P_O = 75mW, f = 1kHz, R_L = 32Ω, headphone		0.022		
t_{WU}	Wake-up time from shutdown			130		ms
PSRR	Power supply rejection ratio	V_{CC} = 3.0V, f = 217Hz, R_L = 8Ωk, speaker		-67		dB
V_{NO}	Noise	V_{CC} = 3.0V~5.0V, V_{IN} = 0V, R_L = 4Ω, speaker		60		μV

DIGITAL INPUT SWITCHING CHARACTERISTICS *(Note 1)*

Symbol	Parameter	Condition	Min.	Typ.	Max.	Unit
f_{SCL}	Serial-Clock frequency				400	kHz
t_{BUF}	Bus free time between a STOP and a START condition		1.3			μs
$t_{HD, STA}$	Hold time (repeated) START condition		0.6			μs
$t_{SU, STA}$	Repeated START condition setup time		0.6			μs
$t_{SU, STO}$	STOP condition setup time		0.6			μs
$t_{HD, DAT}$	Data hold time				0.9	μs
$t_{SU, DAT}$	Data setup time		100			ns
t_{LOW}	SCL clock low period		1.3			μs
t_{HIGH}	SCL clock high period		0.7			μs
t_R	Rise time of both SDA and SCL signals, receiving	*(Note 2)*		20+0.1Cb	300	ns
t_F	Fall time of both SDA and SCL signals, receiving	*(Note 2)*		20+0.1Cb	300	ns

Note 1: Guaranteed by design.

Note 2: Cb = total capacitance of one bus line in pF. $I_{SINK} \leq 6mA$. t_R and t_F measured between 0.3 × V_{CC} and 0.7 × V_{CC}.

TYPICAL PERFORMANCE CHARACTERISTICS

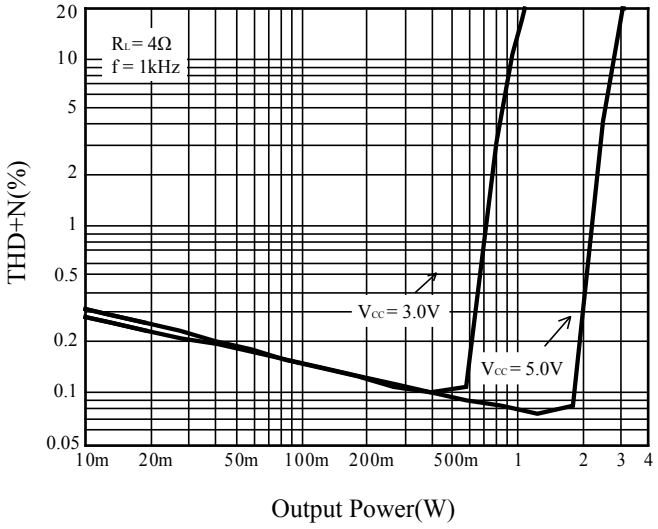

Figure 2 THD+N vs. Output Power

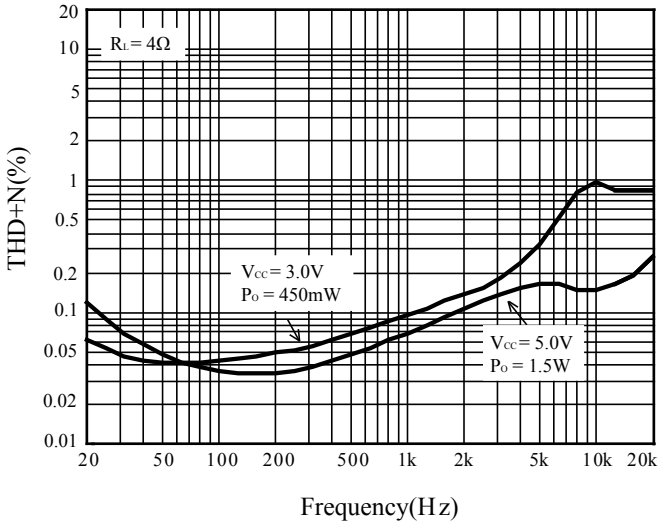

Figure 3 THD+N vs. Frequency

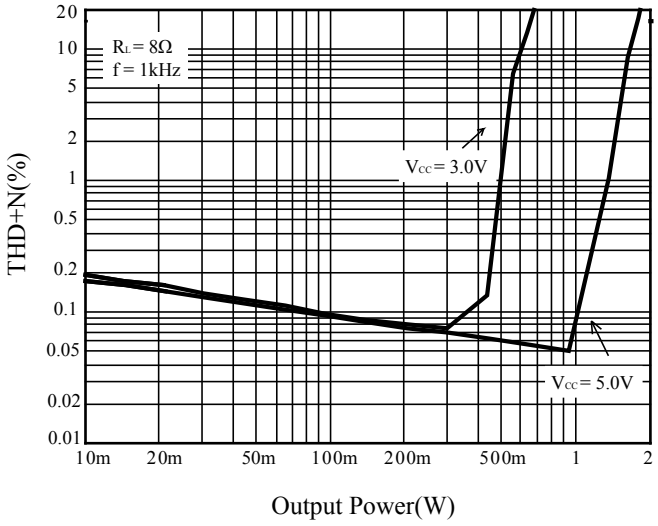

Figure 4 THD+N vs. Output Power

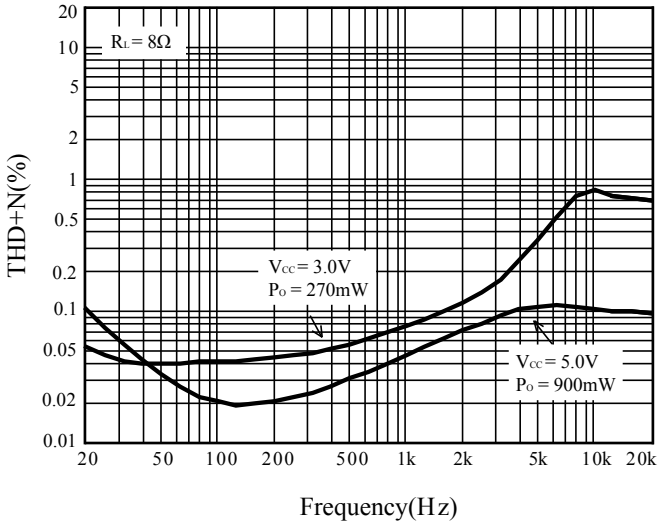

Figure 5 THD+N vs. Frequency

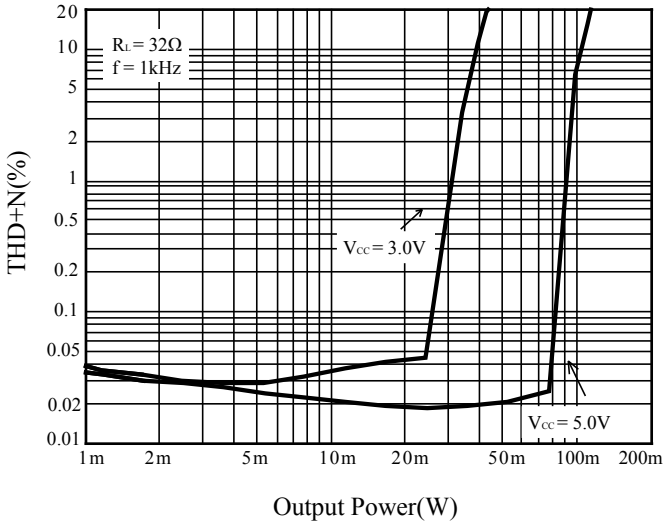

Figure 6 THD+N vs. Output Power

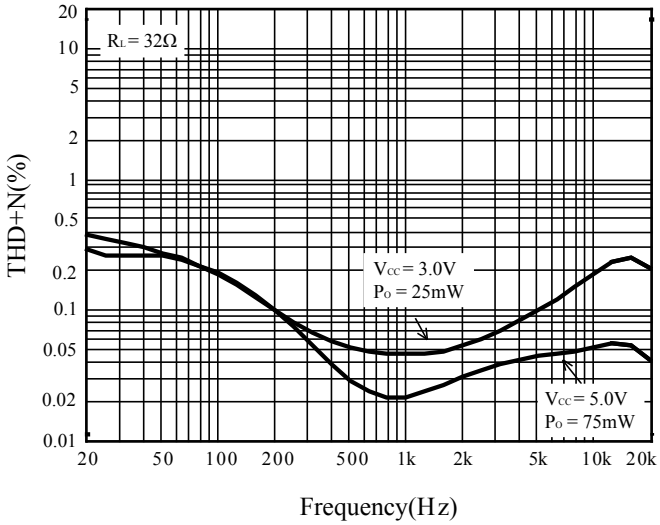

Figure 7 THD+N vs. Frequency

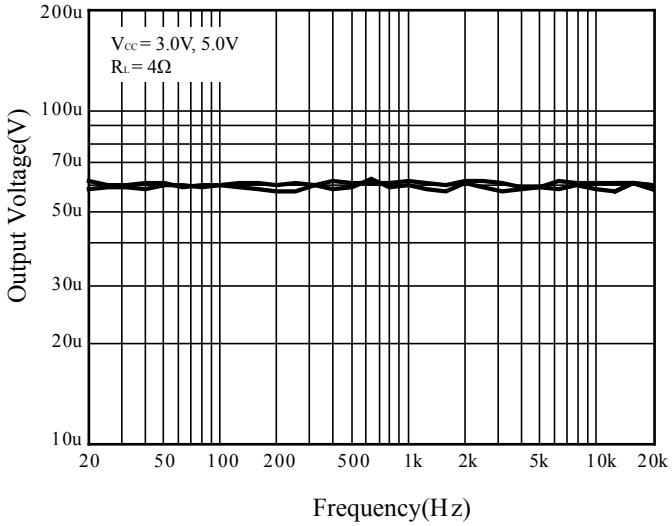

Figure 8 Noise vs. Frequency

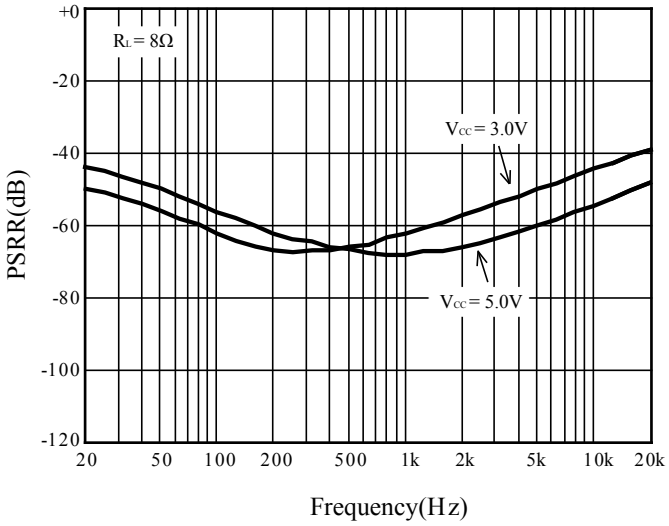

Figure 9 PSRR vs. Frequency

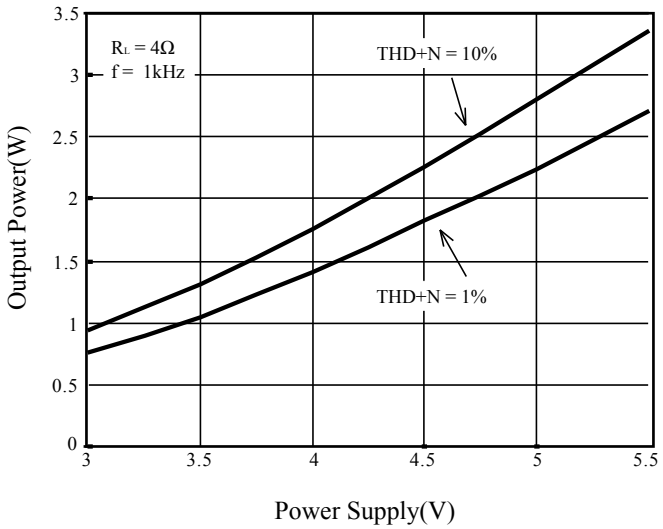

Figure 10 Output Power vs. Power Supply

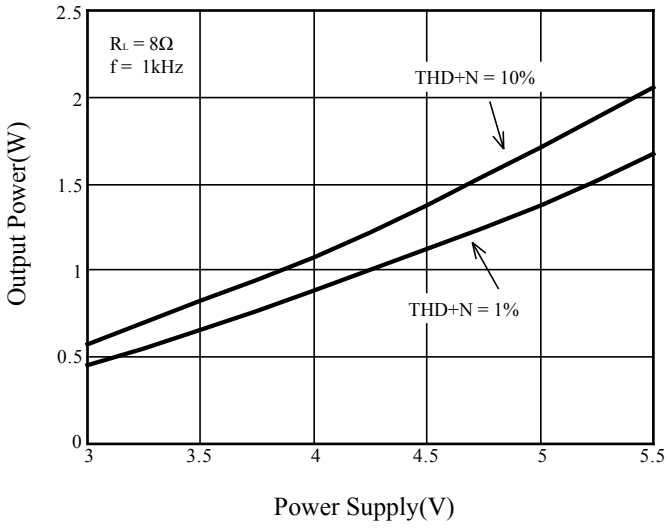

Figure 11 Output Power vs. Power Supply

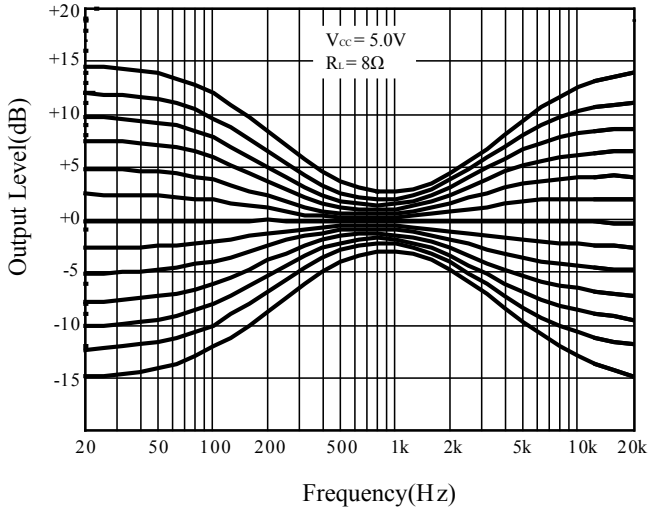

Figure 12 Bass and Treble Response vs. Frequency

FUNCTIONAL BLOCK DIAGRAM

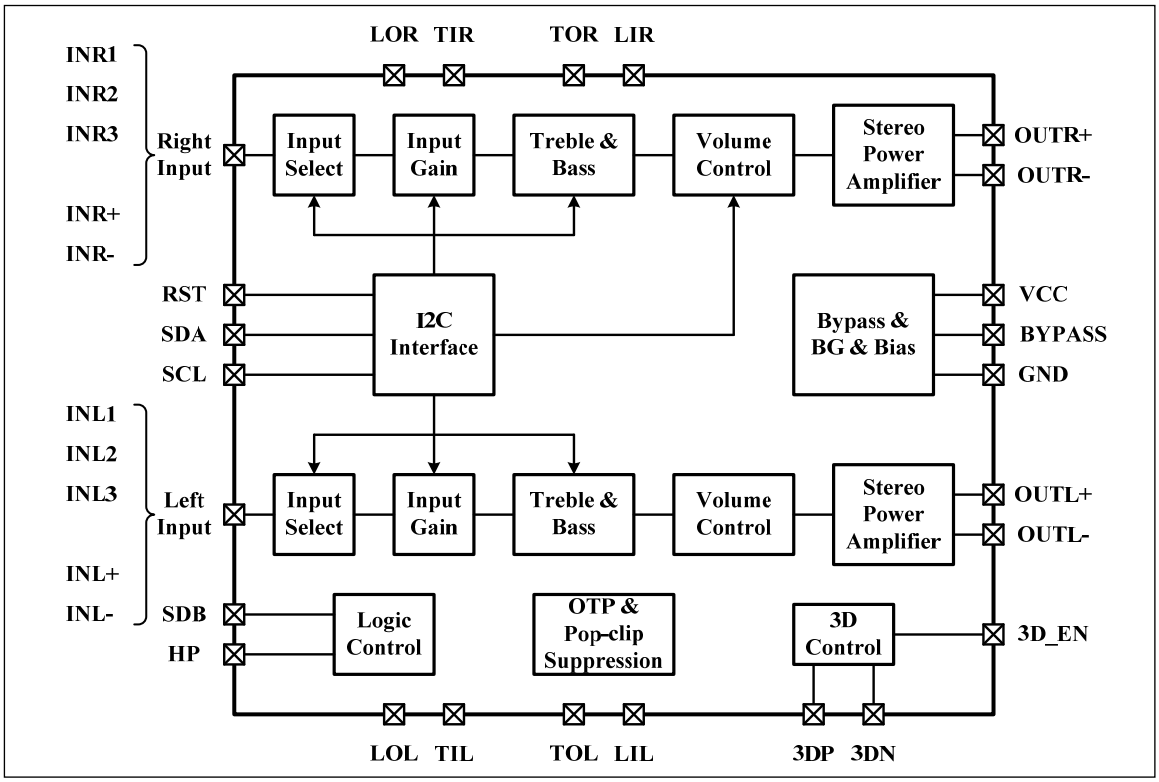

DETAILED DESCRIPTION

I2C INTERFACE

The IS31AP4833 uses a serial bus, which conforms to the I2C protocol, to control the chip's functions with two wires: SCL and SDA. The IS31AP4833's slave address is "1000 0000". It only supports write operations.

The SCL line is uni-directional. The SDA line is bi-directional (open-collector) with a pull-up resistor (typically 4.7kΩ). The maximum clock frequency specified by the I2C standard is 400kHz. In this discussion, the master is the microcontroller and the slave is the IS31AP4833.

The timing diagram for the I2C is shown in Figure 13. The SDA is latched in on the stable high level of the SCL. When there is no interface activity, the SDA line should be held high.

The "START" signal is generated by lowering the SDA signal while the SCL signal is high. The start signal will alert all devices attached to the I2C bus to check the incoming address against their own chip address.

The 8-bit chip address is sent next, most significant bit first. Each address bit must be stable while the SCL level is high.

After the last bit of the chip address is sent, the master checks for the IS31AP4833's acknowledge. The master releases the SDA line high (through a pull-up resistor). Then the master sends an SCL pulse. If the IS31AP4833 has received the address correctly, then it holds the SDA line low during the SCL pulse. If the SDA line is not low, then the master should send a "STOP" signal (discussed later) and abort the transfer.

Following acknowledge of IS31AP4833, the register address byte is sent, most significant bit first. IS31AP4833 must generate another acknowledge indicating that the register address has been received.

Then 8-bit of data byte are sent next, most significant bit first. Each data bit should be valid while the SCL level is stable high. After the data byte is sent, the IS31AP4833 must generate another acknowledge to indicate that the data was received.

The "STOP" signal ends the transfer. To signal "STOP", the SDA signal goes high while the SCL signal is high.

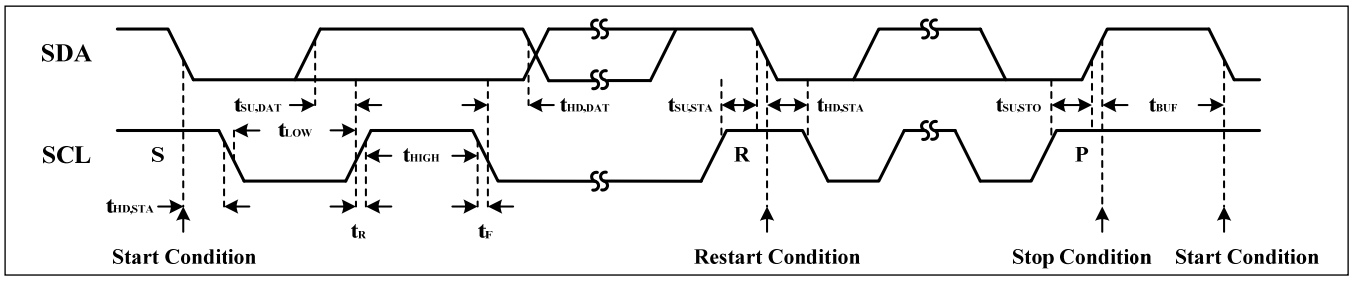

Figure 13 Interface timing

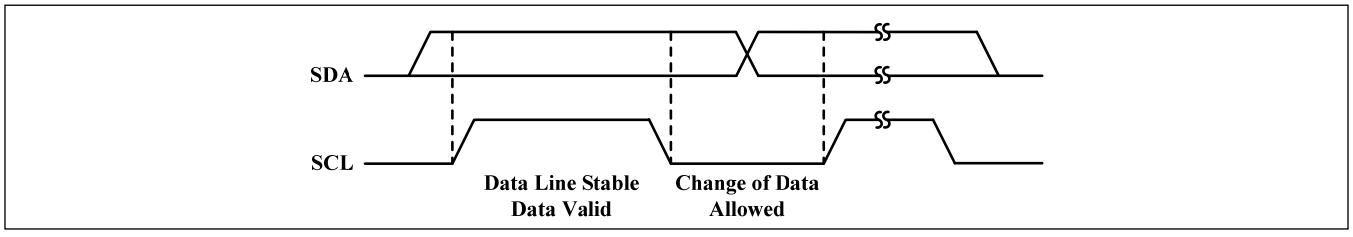

Figure 14 Bit transfer

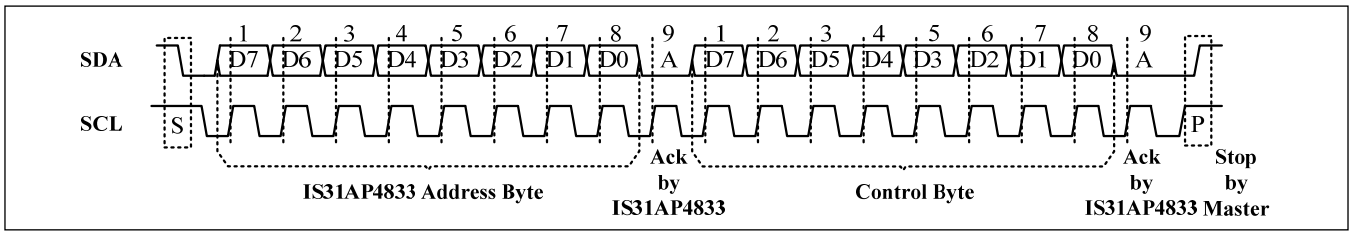

Figure 15 Writing to IS31AP4833

REGISTER DESCRIPTION

Table 1 Byte Function

Address Bit	Data Bit					Function	Table	Default
D7:D5	D4	D3	D2	D1	D0			
000	-		IGS			Audio input gain control	2	0000 0110
001	-	BGS				Bass control	3	0010 0110
010	-	TGS				Treble control	4	0100 0110
011	LVS					Left channel gain control	5	0111 0000
100	RVS					Right channel gain control	6	1001 0000
101	-			IMS		Audio input MUX control	7	1010 0000
111	ME	-	3DE	SE	SSD	Operating mode control	8	1110 0000

Table 2 Audio Input Gain Control Byte

Bit	Address Bit	Data Bit	
	D7:D5	D4:D3	D2:D0
Name	000	-	IGS
Default	000	00	110

Configure the input gain.

IGS	Input Gain Select	Input Resistor
000	-15dB	85kΩ
001	-12dB	80kΩ
010	-9dB	74kΩ
011	-6dB	67kΩ
100	-3dB	59kΩ
101	+0dB	50kΩ
110	+3dB	41kΩ
111	+6dB	33kΩ

Table 3 Bass Control Byte

Bit	Address Bit	Data Bit	
	D7:D5	D4	D3:D0
Name	001	-	BGS
Default	001	0	0110

Configure the bass gain.

BGS	Bass Gain Select
0000	-12dB
0001	-10dB
0010	-8dB
0011	-6dB
0100	-4dB
0101	-2dB
0110	0dB
0111	+2dB
1000	+4dB
1001	+6dB
1010	+8dB
1011	+10dB
1100	+12dB
Others	Not available

Table 4 Treble Control Byte

Bit	Address Bit	Data Bit	
	D7:D5	D4	D3:D0
Name	010	-	TGS
Default	010	0	0110

Configure the treble gain.

TGS	Treble Gain Select
0000	-12dB
0001	-10dB
0010	-8dB
0011	-6dB
0100	-4dB
0101	-2dB
0110	0dB
0111	+2dB
1000	+4dB
1001	+6dB
1010	+8dB
1011	+10dB
1100	+12dB
Others	Not available

Table 5 Left Channel Gain Control Byte

Bit	Address Bit	Data Bit
	D7:D5	D4:D0
Name	011	LVS
Default	011	10000

Configure the left channel gain (see Table 9).

LVS	Left Volume Select
00000	Mute
00001	-42dB
00010	-40dB
00011	-38dB
… …	
10000	-12dB
… …	
10110	+0dB
10111	+2dB
… …	
111xx	+12dB

Table 6 Right Channel Gain Control Byte

Bit	Address Bit	Data Bit
	D7:D5	D4:D0
Name	100	RVS
Default	100	10000

Configure the right channel gain (see Table 9).

RVS	Right Volume Select
00000	Mute
00001	-42dB
00010	-40dB
00011	-38dB
… …	
10000	-12dB
… …	
10110	+0dB
10111	+2dB
… …	
111xx	+12dB

Table 7 Audio Input MUX Control Byte

Bit	Address Bit	Data Bit	
	D7:D5	D4:D2	D1:D0
Name	101	-	IMS
Default	101	000	00

Single-ended or differential input selected.

IMS	Input MUX Select
00	Single-ended Input 1
01	Single-ended Input 2
10	Single-ended Input 3
11	Differential Input

Table 8 Operating Mode Control Byte

Bit	Address Bit	Data Bit				
	D7:D5	D4	D3	D2	D1	D0
Name	111	ME	-	3DE	SE	SSD
Default	111	0	0	0	0	0

Configure the operating mode for IS31AP4833.

SSD Shutdown Enable
0 Operating Mode
1 Shutdown Mode

SE Speaker Enable
0 Speaker Enable
1 Speaker Disable

3DE 3D Enable
0 3D Off
1 3D On

ME Mute Enable
0 Mute Disable
1 Mute Enable

Table 9 Left/Right Channel Gain Control

Data	Gain	Data	Gain
00000	Mute	01111	-14
00001	-42	10000	-12
00010	-40	10001	-10
00011	-38	10010	-8
00100	-36	10011	-6
00101	-34	10100	-4
00110	-32	10101	-2
00111	-30	10110	+0
01000	-28	10111	+2
01001	-26	11000	+4
01010	-24	11001	+6
01011	-22	11010	+8
01100	-20	11011	+10
01101	-18	111xx	+12
01110	-16		

APPLICATION INFORMATION

3D ENHANCEMENT

The IS31AP4833 has a 3D audio enhancement effect that helps improve the apparent stereo channel separation when, because of cabinet or equipment limitations, the left and right speakers are closer to each other than optimal.

Decreasing the resistor size will make the 3D effect more pronounced and decreasing the capacitor size will raise the cutoff frequency for the effect. A 68nF capacitor is used to reduce the effect at frequencies below 1kHz. Increasing the value of the capacitor will decrease the low cutoff frequency at which the stereo enhanced effect starts to occur as shown below

$$f_{3D} = \frac{1}{2\pi R_{3D} C_{3D}} \qquad (1)$$

For example, according to the Figure 1,

R_{3D} = 2.7kΩ, C_{3D} = 68nF

So, $f_{3D} = \frac{1}{2\pi \times 2.7k\Omega \times 68nF} \approx 867\,Hz$

The 3D enhancement effect enabled by setting the 3DE bit of the control byte “111x xxxx”. When setting the 3DE bit to “1”, 3D enhancement enabled. When setting the 3DE bit to “0”, 3D enhancement disabled. Pulling the 3D_EN pin to high will enable the 3D enhancement either.

Set the 3DE bit to “1” or pull the 3D_EN pin to high will enable the 3D enhancement. Shutdown the 3D enhancement should set the 3DE bit to “0” and pull the 3D_EN pin to low.

TONE CONTROL RESPONSE

Bass and treble tone controls are included in the IS31AP4833. The tone controls use two external capacitors for each stereo channel (C_{1L}, C_{2L}, C_{1R}, C_{2R}). Each has a corner frequency determined by the value of C_1, C_2 and internal resistors in the feedback loop of the internal tone amplifier.

With C = C_1 = C_2, the treble turn-over frequency is nominally

$$f_{TT} = \frac{1}{2\pi \times 56k\Omega \times C} \qquad (2)$$

and the bass turn-over frequency is nominally

$$f_{BT} = \frac{1}{2\pi \times 113.3k\Omega \times C} \qquad (3)$$

For example, according to the Figure 1,

C_1 = C_2 = 2.2nF

So, $f_{TT} = \frac{1}{2\pi \times 56k\Omega \times 2.2nF} \approx 1.3kHz$

$f_{BT} = \frac{1}{2\pi \times 113.3k\Omega \times 2.2nF} \approx 639\,Hz$

The bass and treble gain can be adjusted independently by the control byte “010x xxxx” and “001x xxxx” (Table 3, 4).

GAIN SELECTION

The left/right channel gain can be adjusted by the LVS bit of the control byte “011x xxxx” and the RVS bit of the control byte “100x xxxx” (Table 5, 6).

In the speaker mode the output gain is equaled to audio input gain(IGS)+left/right channel gain(LVS/RVS)+6dB.

In the headphone mode the output gain is equaled to audio input gain(IGS)+left/right channel gain(LVS/RVS).

INPUT CAPACITORS (C_{IN})

The input capacitors (C_{IN}) and internal resistor (R_{IN}) form a high-pass filter with the corner frequency, f_C, determined in Equation (4).

$$f_c = \frac{1}{2\pi R_{IN} C_{IN}} \qquad (4)$$

The value of R_{IN} is following the audio input gain (see Table 2).

For example, in figure 1,

C_{IN} = 220nF, the audio input gain is set to -3dB, so the R_{IN} = 59kΩ,

then, $f_c = \frac{1}{2\pi \times 59k\Omega \times 220nF} \approx 12\,Hz$

The capacitors should have a tolerance of ±10% or better, because any mismatch in capacitance causes an impedance mismatch at the corner frequency and below.

MUTE FUNCTION

By setting the LVS/RVS bit to “00000” the left/right channel output will be mute independently (see Table 5, 6). The ME bit of the control byte “111x xxxx” sets the mute function for left and right channels. When the ME bit is set to “1”, the left and right channels are both mute (see Table 8). When the ME bit is set to “0”, the left and right channels will resume the volume before.

INPUT SIGNAL SELECTION

IS31AP4833 can choose single-ended or differential signal for the input source. Single-ended input 1, single-ended input 2, single-ended input 3 and differential input signal can be chosen by the IMS bit of control byte “101x xxxx”(see Table 7).

HEADPHONE MODE

IS31AP4833 can also be used to drive headphone. The IC will shut off the positive output if headphone plug-in has been detected. Then the speaker will stop working and switch to the headphone mode.

SHUTDOWN MODE

Shutdown mode can either be used as a means of reducing power consumption. During shutdown mode all registers retain their data.

SOFTWARE SHUTDOWN

By setting SSD bit of the control byte “111x xxxx” to “1”, the IS31AP4833 will operate in software shutdown mode, wherein they consume only 1μA (Typ.) current.

HARDWARE SHUTDOWN

The chip enters hardware shutdown mode when the SDB pin is pulled low, wherein they consume only 1μA (Typ.) current.

CLASSIFICATION REFLOW PROFILES

Profile Feature	Pb-Free Assembly
Preheat & Soak Temperature min (Tsmin) Temperature max (Tsmax) Time (Tsmin to Tsmax) (ts)	150°C 200°C 60-120 seconds
Average ramp-up rate (Tsmax to Tp)	3°C/second max.
Liquidous temperature (TL) Time at liquidous (tL)	217°C 60-150 seconds
Peak package body temperature (Tp)*	Max 260°C
Time (tp)** within 5°C of the specified classification temperature (Tc)	Max 30 seconds
Average ramp-down rate (Tp to Tsmax)	6°C/second max.
Time 25°C to peak temperature	8 minutes max.

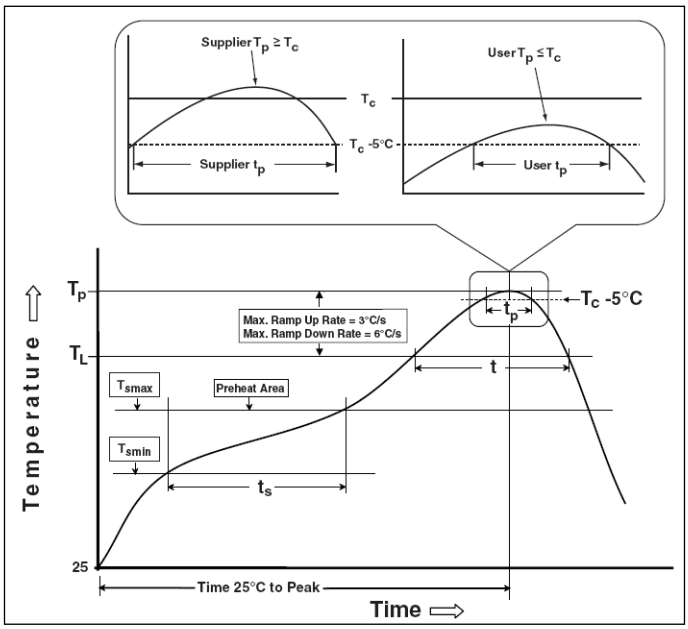

Figure 16 Classification Profile

PACKAGING INFORMATION

QFN-36

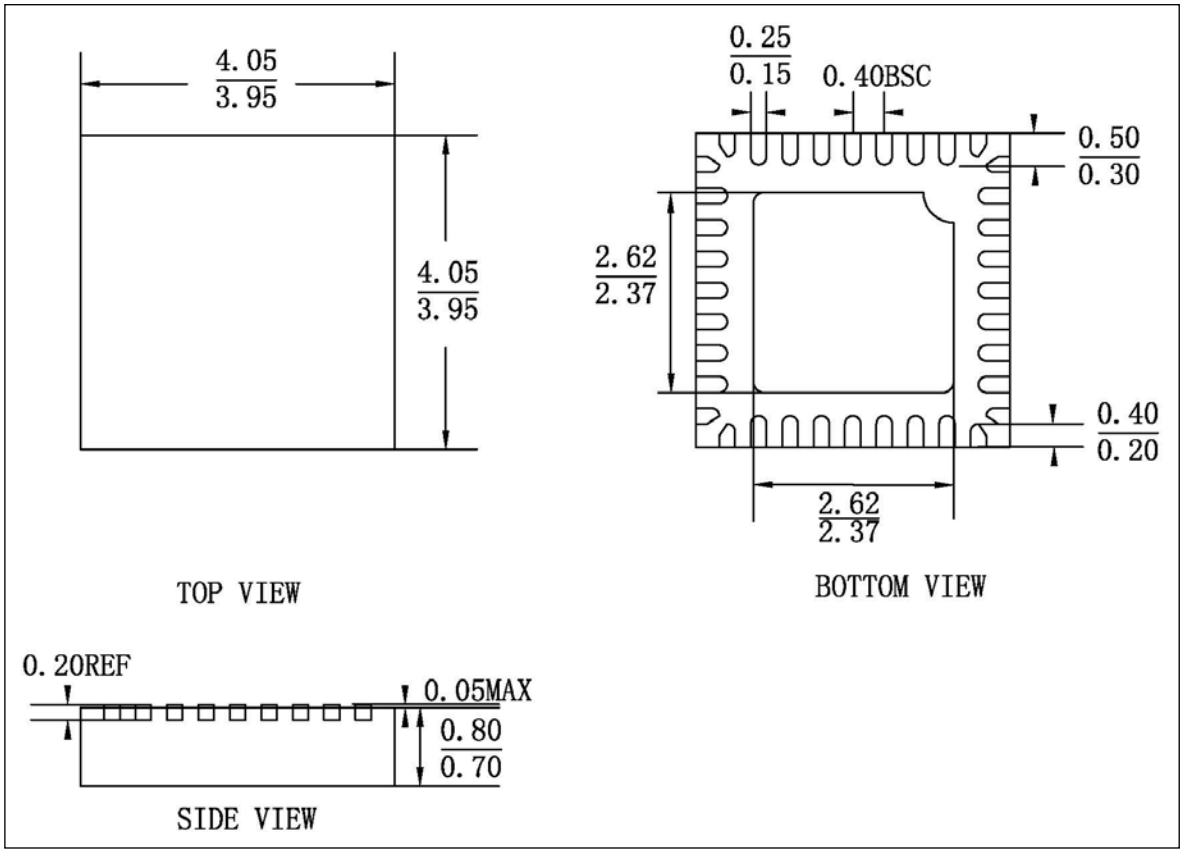

TQFP-48

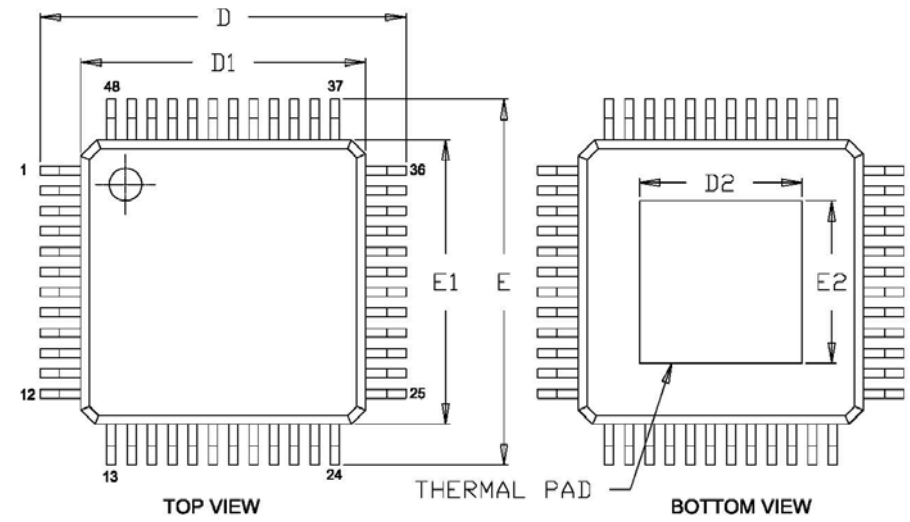

SYMBOL	MILLIMETER		
	MIN	NOM	MAX
A	—	—	1.20
A1	0.05	—	0.15
A2	0.95	1.00	1.05
D		9.00 BSC	
D1		7.00 BSC	
D2	2.00	—	—
E		9.00 BSC	
E1		7.00 BSC	
E2	2.00	—	—
L	0.45	0.60	0.75
b	0.17	0.22	0.27
e		0.50 BSC	
c	0.09	—	0.20
θ	0°	—	7°

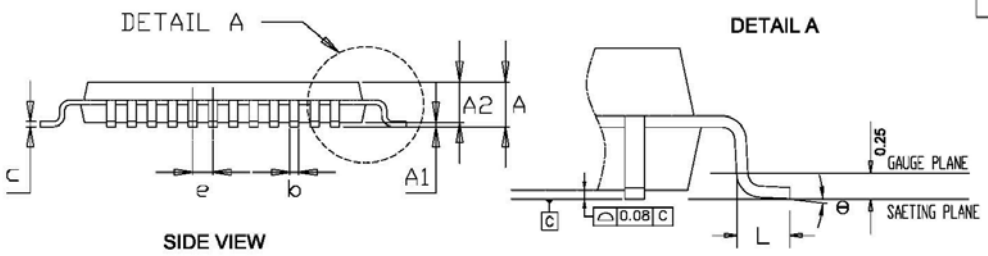

NOTES:
The thermal pad shows different shape among different factories.

Note: All dimensions in millimeters unless otherwise stated.