IS1870/71

Bluetooth® Low Energy (BLE) SoC

Features

- Bluetooth smart 4.2 Bluetooth Low-Energy (BLE) compliant
- 256 Kbytes embedded Flash memory
- UART/SPI/I^2C interface supported
- Integrated crystal oscillator, operates with 32 MHz external crystal
- Temperature sensor supported
- Flexible GPIO pins:
  - 31 GPIO pins (IS1870)
  - 15 GPIO pins (IS1871)
- PWM support:
  - 4-channel PWM support (IS1870)
  - 1-channel PWM support (IS1871)
- 12 bits ADC (ENOB=10/8-bit) support for battery and voltage detection. 16-channel (IS1870)/ 6-channel (IS1871)
- AES-CMAC hardware engine
- Beacon support
- Low-power consumption
- Peak current: Tx 13 mA, Rx 13 mA at V_{BAT}=3.0V, buck power
- Compact size:
  - IS1871: 4 mm x 4 mm 32QFN package
  - IS1870: 6 mm x 6 mm 48QFN package

Radio Frequency (RF)/Analog Features

- ISM band: 2.402 GHz to 2.480 GHz operation
- Channels: 0-39
- Rx sensitivity: -90 dBm in BLE mode
- Tx power: +2 dBm (max)
- Received Signal Strength Indicator (RSSI) monitor

Operating Conditions

- Operating voltage: 1.9V to 3.6V
- Operating temperature: -20°C to +70°C

Applications

- Internet of Things (IoT)
- Wearable, fitness, or healthcare
- Weight scale
- Proximity/Find Me services
- Payment/Security
- Digital Beacons
- Consumer appliances or home automation
- Industrial

Packages

Type	IS1870	IS1871
Pin Count	48	32
I/O Pins (up to)	31	16
Contact/Lead Pitch	0.4	0.4
Dimensions	6x6x0.9	4x4x0.9
Package	QFN48	QFN32

Note: All dimensions are in millimeters (mm) unless specified.

© 2015-2016 Microchip Technology Inc.

NOTES:

© 2015-2016 Microchip Technology Inc.

Table of Contents

1.0 Device Overview 5
2.0 System Block Details 13
3.0 Electrical Characteristics 17
4.0 Package Information 21
5.0 Reflow Profile and Storage Condition 27
6.0 Ordering Guide 31
Appendix A: Reference Circuit 33
Appendix B: Layout Guidelines 37
Appendix C: Revision History 39

TO OUR VALUED CUSTOMERS

It is our intention to provide our valued customers with the best documentation possible to ensure successful use of your Microchip products. To this end, we will continue to improve our publications to better suit your needs. Our publications will be refined and enhanced as new volumes and updates are introduced.

If you have any questions or comments regarding this publication, please contact the Marketing Communications Department via E-mail at **docerrors@microchip.com** or fax the **Reader Response Form** in the back of this data sheet to (480) 792-4150. We welcome your feedback.

Most Current Data Sheet

To obtain the most up-to-date version of this data sheet, please register at our Worldwide Web site at:

http://www.microchip.com

You can determine the version of a data sheet by examining its literature number found on the bottom outside corner of any page. The last character of the literature number is the version number, (e.g., DS30000000A is version A of document DS30000000).

Errata

An errata sheet, describing minor operational differences from the data sheet and recommended workarounds, may exist for current devices. As device/documentation issues become known to us, we will publish an errata sheet. The errata will specify the revision of silicon and revision of document to which it applies.

To determine if an errata sheet exists for a particular device, please check with one of the following:

- Microchip's Worldwide Web site; **http://www.microchip.com**
- Your local Microchip sales office (see last page)

When contacting a sales office, please specify which device, revision of silicon and data sheet (include literature number) you are using.

Customer Notification System

Register on our web site at **www.microchip.com** to receive the most current information on all of our products.

NOTES:

© 2015-2016 Microchip Technology Inc.

1.0 DEVICE OVERVIEW

Microchip Technology IS1870/71 embedded 2.4 GHz Bluetooth version 4.2 (BLE) SoC incorporates, 2.4 GHz transceiver, Power Management Unit (PMU), Bluetooth LE stack and RF power amplifier. The user can embed the Bluetooth functionality to IoT applications.

The IS1870/71 is cost effective and designed to provide developers a simple Bluetooth solution with the following features:

- Simple integration and programming
- Reduced development time
- Superior BLE solution with low-cost system
- Interoperability with Apple® iOS and Android™ OS
- Wide range of applications

The IS1870/71 supports Beacon technology and improves user experiences in IoT applications, such as auto connection/control and cloud connectivity.

The IS1870/71 can maintain a low-power wireless connection. The low-power consumption and flexible power management maximizes the IS1870/71 lifetime in battery operated devices. A wide operating temperature range allows use in indoor and outdoor environments (industrial temperature range).

The small-form factor package size of the IS1870/71 is designed for wearable applications. The solution providers can minimize the module size to meet the market requirement. The IS187x SoC is designed for the application-enabled accessories and IoT applications.

Operating in the 2.4 GHz ISM band radio, the IS1870/71 is certified for the Bluetooth core specification version 4.2 including support for the enhanced throughput, and the Federal Information Processing Standard (FIPS) compliant encryption support for secure data connections.

The IS1870/71 integrates transceiver and baseband functions to decrease the external components. A free Bluetooth stack firmware is provided for building embedded BLE solutions that use the IS1870/71 SoC.

For portable and wearable applications, the IS1870/71 SoC's optimized power design helps to minimize current consumption for extended battery life and it minimizes the module size to as small as possible.

Figure 1-1 and Figure 1-2 illustrate a typical example of the IS1870 and IS1871 system block diagrams. Table 1-1 provides key features of the IS1870/71 SoC.

FIGURE 1-1: IS1870-BASED SYSTEM BLOCK DIAGRAM

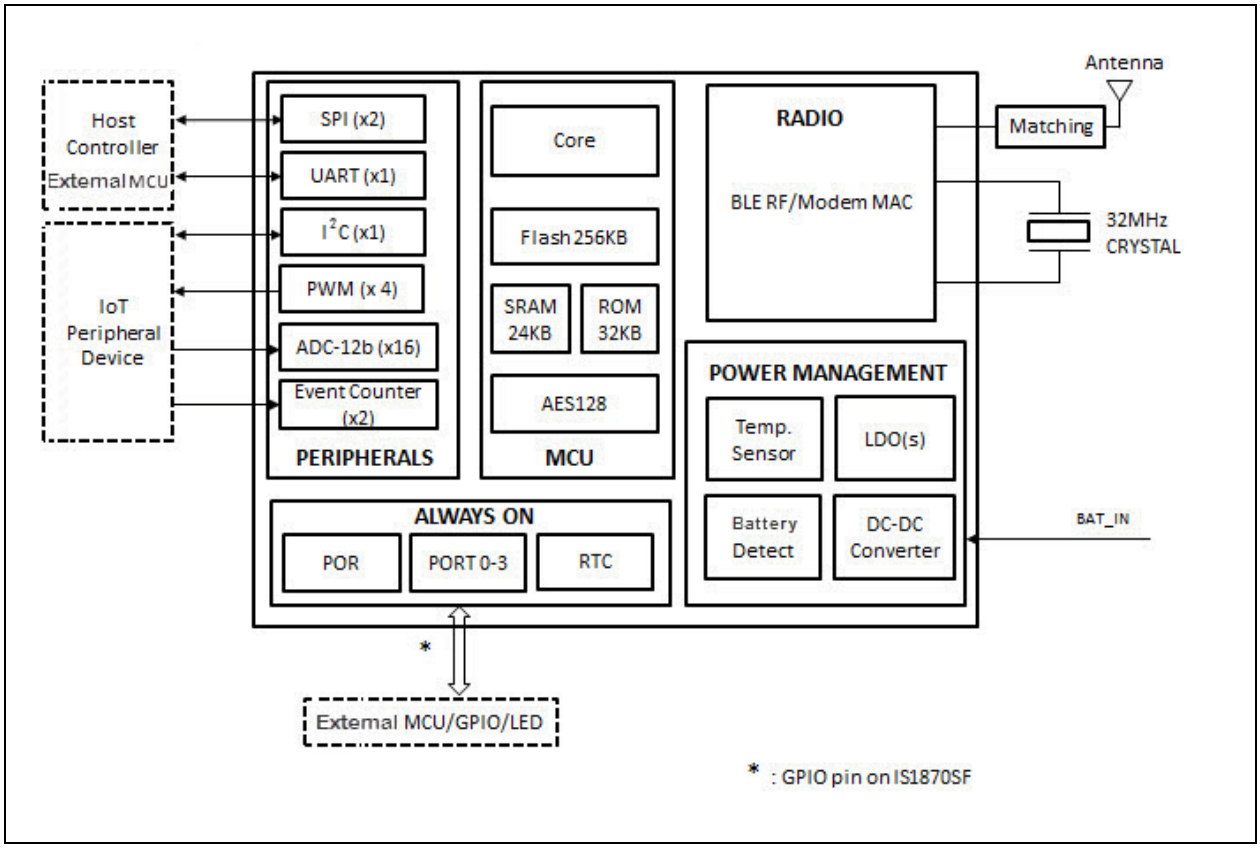

FIGURE 1-2: IS1871-BASED SYSTEM BLOCK DIAGRAM

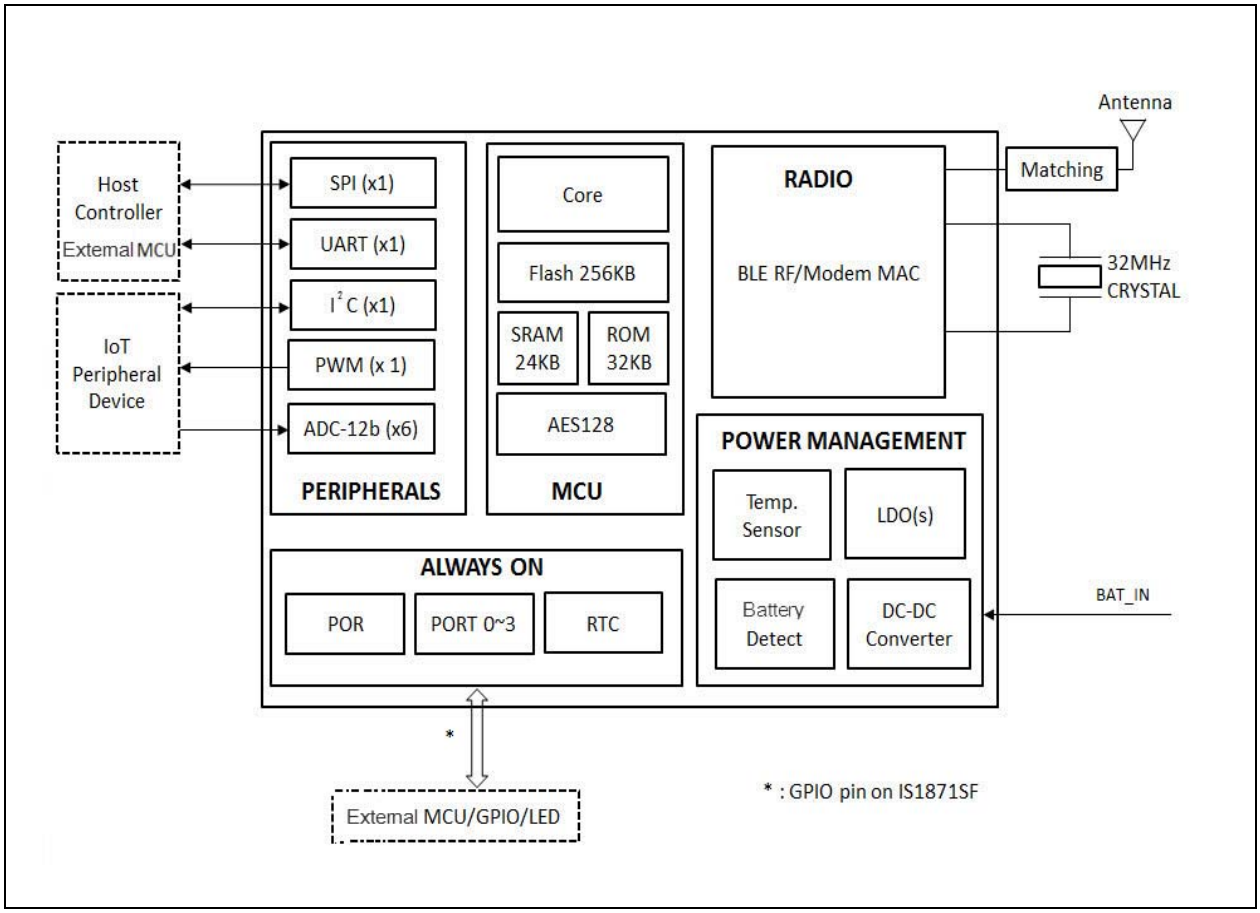

TABLE 1-1: KEY FEATURES

Features	IS1870	IS1871
UART	1	1
GPIO	31	15
12-bit ADC Channels	16	6
PWM	4	1
SPI	2	1
I^2C	1	1
Pins	48	32
Size	6 mm x 6 mm x 0.9 mm	4 mm x 4 mm x 0.9 mm
Event Counter	2	0
AES-CMAC H/W Engine	Yes	Yes

© 2015-2016 Microchip Technology Inc.

Pin Description

Figure 1-3 and Figure 1-4 illustrate the IS1870 and IS1871 pin assignment details, and Table 1-2 provides the functions of the various pins.

FIGURE 1-3: IS1870 PIN ASSIGNMENT

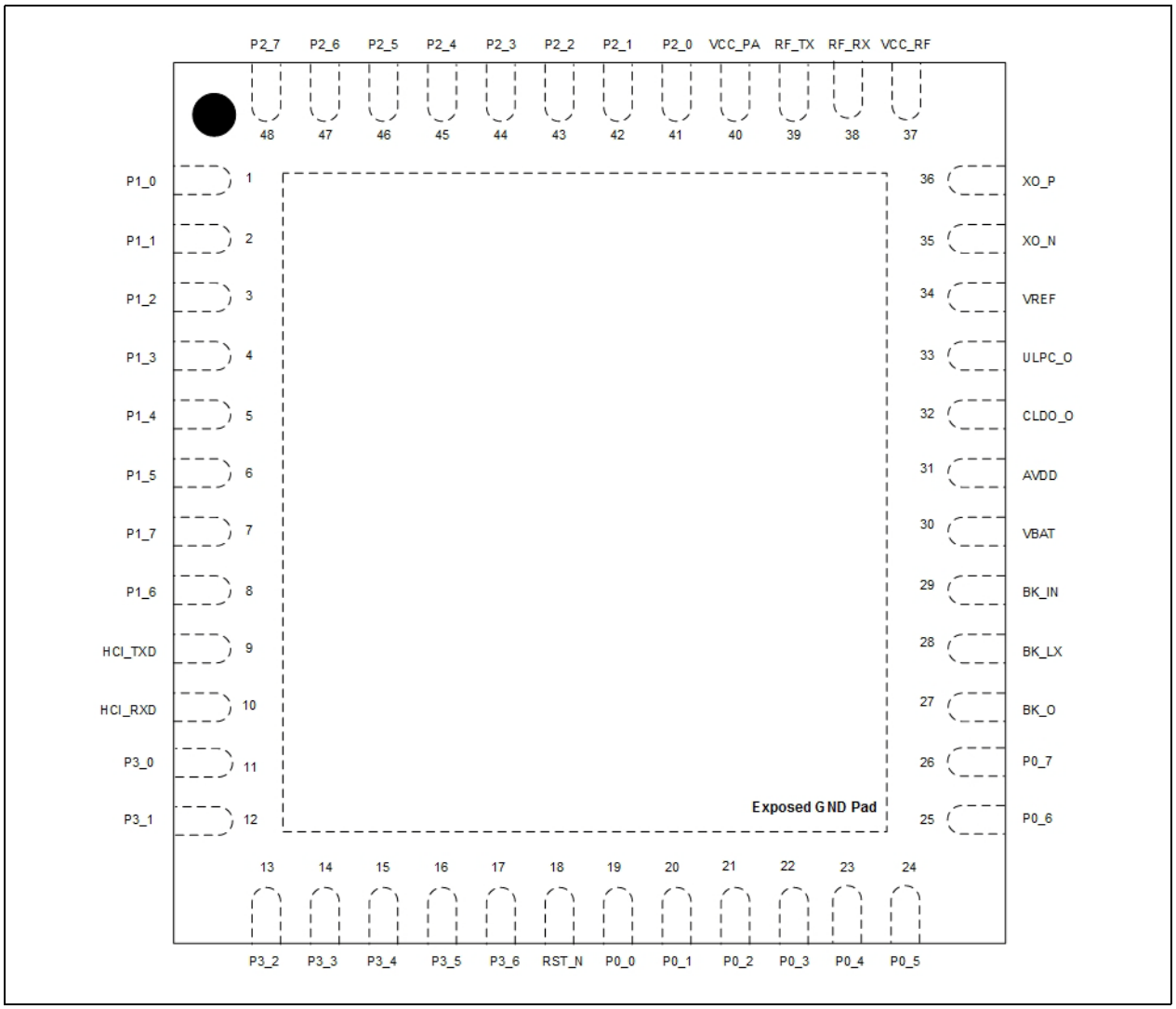

FIGURE 1-4: IS1871 PIN ASSIGNMENT

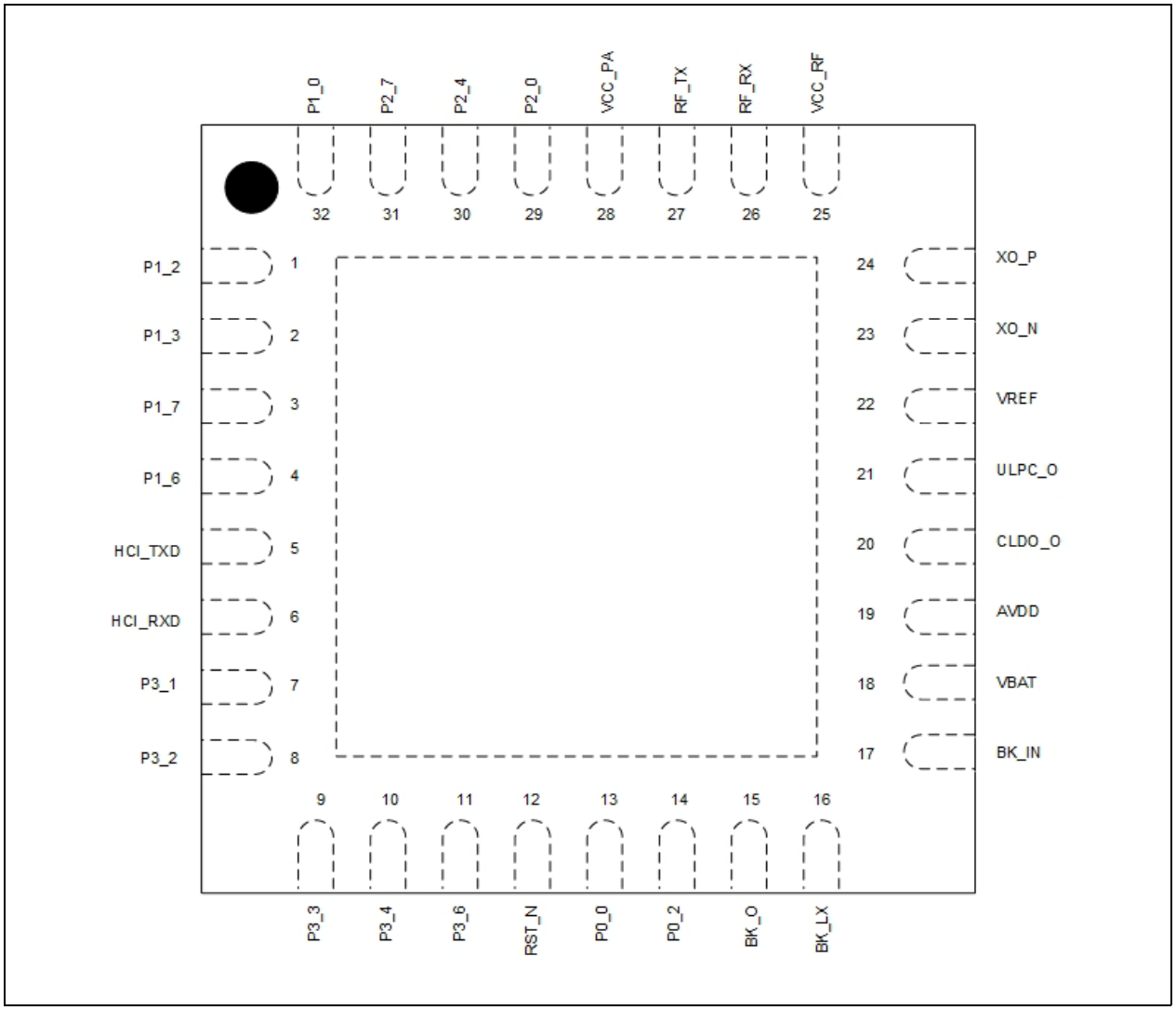

© 2015-2016 Microchip Technology Inc.

TABLE 1-2: PIN DESCRIPTION

IS1870 Pin No.	IS1871 Pin No.	Pin Name	Type	Description
1	32	P1_0	DIO AI	GPIO: P1_0 ADC input: AD8 TX_CLS1: Class 1 RF TX Control
2	—	P1_1	DIO AI DI	GPIO: P1_1 ADC input: AD9 SPI bus: MISO2: second SPI bus (Master Mode)
3	1	P1_2	DIO AI I/O	GPIO: P1_2 ADC input: AD10 I^2C SCL
4	2	P1_3	DIO AI DIO	GPIO: P1_3 ADC input: AD11 I^2C SDA
5	—	P1_4	DIO AI DI	GPIO: P1_4 ADC input: AD12 Event Counter
6	—	P1_5	DIO AI DI	GPIO: P1_5 ADC input: AD13 Event Counter
7	3	P1_7	DIO AO	GPIO: P1_7 External 32.768 KHz Crystal Output: XO32K
8	4	P1_6	DIO AI	GPIO: P1_6 External 32.768 KHz Crystal Input: XI32K
9	5	IOA HCI_TXD	DIO DO	GPIO HCI UART TXD
10	6	IOB HCI_RXD	DIO DI	GPIO HCI UART RXD
11	—	P3_0	DIO	GPIO: P3_0
12	7	P3_1	DIO DO	GPIO: P3_1 SPI bus: NCS, SPI Flash: CSN
13	8	P3_2	DIO DI	GPIO: P3_2 SPI bus: MISO, SPI Flash: SDO
14	9	P3_3	DIO DO	GPIO: P3_3 SPI bus: MOSI, SPI Flash: SDI
15	10	P3_4	DIO DO	GPIO: P3_4 SPI bus: SCLK, SPI Flash: SCK
16	—	P3_5	DIO AI	GPIO: P3_5 LED1
17	11	P3_6	DIO DO DO	GPIO: P3_6 UART flow-control RTS PWM0
18	12	RST_N	DI	External Reset
19	13	P0_0	DIO AI DI	GPIO: P0_0 ADC input: AD0 UART flow-control CTS
20	—	P0_1	DIO AI	GPIO: P0_1 ADC input: AD1

Legend: A = Analog D = Digital I = Input O = Output P = Power

IS1870 Pin No.	IS1871 Pin No.	Pin Name	Type	Description
21	14	P0_2	DIO AI AI	GPIO: P0_2 ADC input: AD2 LED0
22	—	P0_3	DIO AI	GPIO:P0_3 ADC input: AD3
23	—	P0_4	DIO AI	GPIO:P0_4 ADC input: AD4
24	—	P0_5	DIO AI	GPIO:P0_5 ADC input: AD5
25	—	P0_6	DIO AI	GPIO:P0_6 ADC input: AD6
26	—	P0_7	DIO AI	GPIO:P0_7 ADC input: AD7
27	15	BK_O	P	1.5V (for internal use, do not connect to external devices)
28	16	BK_LX	P	Buck output (1.55V). For internal use, do not connect to external devices
29	17	BK_IN	P	Buck input. Voltage Range: 1.9V~3.6V
30	18	VBAT	P	Battery input. Voltage Range: 1.9V~3.6V. Connect to BK_IN and a 10 uF decoupling capacitor as shown in Figure A-1 and Figure A-3.
31	19	AVDD	P	input of LDOs: CLDO, PALDO, and RFLDO
32	20	CLDO_O	P	1.2V CLDO Output: Core-logic and memories supply, connect to 1 µF (X5R/X7R) capacitor
33	21	ULPC_O	P	1.2V Programmable ULPC Output: Always On-logic and retention memory supply (for internal use, do not connect to external devices)
34	22	VREF	P	PMU band-gap reference voltage output for LDOs and buck (for internal use, do not connect to external devices)
35	23	XO_N	A	32 MHz crystal input negative
36	24	XO_P	A	32 MHz crystal input positive
37	25	VCC_RF	P	Power input for VCO and RF (1.28V). Connect to 1 µF (X5R/X7R) capacitor
38	26	Rx	AI	RF receive path
39	27	Tx	AO	RF transmit path
40	28	VCC_PA	P	Power supply for power amplifier (1.55V). Connect to 0.22 µF X5R/X7R
41	29	P2_0	DIO	Mode Configuration H: Application mode L: Test mode
42	—	P2_1	DIO DO	GPIO: P2_1 PWM0
43	—	P2_2	DIO DO	GPIO: P2_2 PWM1
44	—	P2_3	DIO DO	GPIO: P2_3 PWM2
45	30	P2_4	DIO	GPIO: P2_4 TX_CLS1: Class 1 RF RX Control

Legend: A = Analog D = Digital I = Input O = Output P = Power

© 2015-2016 Microchip Technology Inc.

IS1870 Pin No.	IS1871 Pin No.	Pin Name	Type	Description
46	—	P2_5	DIO AI DO	GPIO: P2_5 ADC input: AD15 PWM3
47	—	P2_6	DIO	P26
48	31	P2_7	DIO AI DO	GPIO: P27 ADC input: AD14 SPI bus: NCS2, second SPI bus (Master mode)

Legend: A = Analog D = Digital I = Input O = Output P = Power

NOTES:

© 2015-2016 Microchip Technology Inc.

2.0 SYSTEM BLOCK DETAILS

2.1 System Block Descriptions

Each system block of the IS1870/71 is described in this section.

2.1.1 PMU

The IS1870/71 includes a DC-DC converter and four LDOs. These LDOs can be configured for various operating modes and applications to suppress the peak current and maximize battery life, see Figure 2-1.

FIGURE 2-1: IS1870/71 POWER TREE

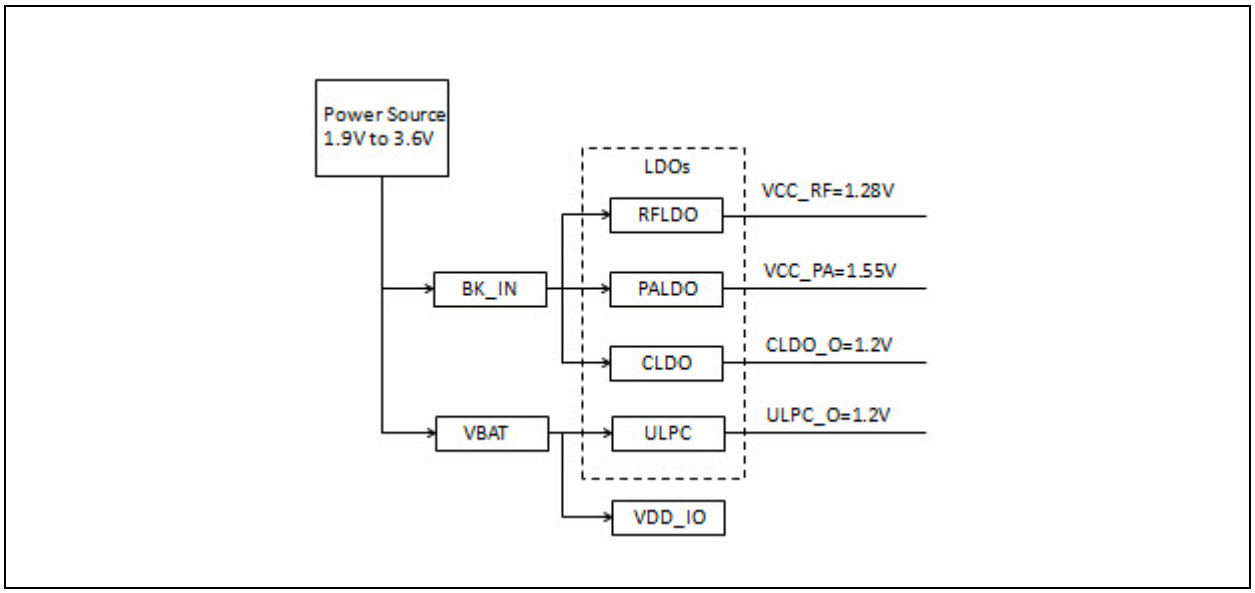

2.1.2 AON

AON is the hardware-based state machine that controls the power-up and power sequence. It includes a RTC timer and an I/O detector, which can wake-up the system from Standby mode or Power-Saving mode using time-out or I/O transition.

2.1.3 RF

The IS1870/71 has an on-chip RF circuit, a controller, and a modulator (Tx)/demodulator (Rx). The Tx is used to control the synthesizer's phase and output power, and modulate the data based on the BLE specifications. The Rx is used to decode the Bluetooth signal and optimize the performance, such as IQ-imbalance, suppress DC, and flick noise. It is also used to compensate the frequency drift and offset, filter out interference to maximize receiver sensitivity.

2.1.4 PERIPHERALS

The IS1870/71 interface is built-in to connect external MCU and sensors.

2.1.5 MCU

The IS1870/71 has an 8051 core ROM, RAM, embedded Flash to schedule the BLE tasks, process BLE protocol stacks, and profiles.

© 2015-2016 Microchip Technology Inc.

2.2 System Block Specification

The following are system block specifications:

2.2.1 RF

- Bluetooth BT4.2 LE compliant SoC
- Frequency: 2.402 GHz to 2.480 GHz
- Programmable transmit output power up to +2 dBm maximum
- -25 dBm minimum Tx power to search nearby devices
- -90 dBm typical receiver power sensitivity
- Digital RSSI indicator (-50 dBm~-90 dBm)
- -20°C to +70°C BLE RF certified

2.2.2 PMU

- Operating battery input voltage range: 1.9V~3.6V
- 1.28V RFLDO: RF IP power supply
- 1.55V PALDO: RF Tx power amplify supply
- 1.2V CLDO: Core-logic and memories supply
- 1.55V DC-DC switching buck converter
- 1.2V programmable ULPC to supply AON-logic and retention memory
- AON-logic to control power-up, power-down and wake up procedures
- Internal 32 KHz (±250 ppm) ultra low-power oscillator
- Power-on Reset

2.2.3 MCU

- 8051 Core with scalable clock
- ROM: 32 KB
- Main SRAM: 24 KB
- Embedded Flash: 256 KB for Device Firmware Upgrade (DFU) and run-time data storage

2.2.4 PERIPHERALS

- Flexible GPIO pin configuration
- ADC:
  - 0V~3.6V, 12-bit SDM-ADC with 16-channel (IS1870) or 6-Channel (IS1871) hybrid-I/O (Multi-Function). It can be configured as ADC or GPIO input
- Internal 1.9V~3.6V battery voltage monitor
- Precision Temperature Sensor (PTS) (-20°C ~+70°C, ±3°C accuracy)
- 4 MHz clock-rate full duplex 4-wire master/slave SPI with 256 bytes buffer DMA
- HCI over UART up to 921600 bps with flow-control
- 2-wire serial interface (compatible to I^2C)
- General-purpose I/O pins with input internal pull-up /Hi-Z selectable
- 24-bit low-power Real Time Counter (RTC) for background timer in standby mode
- Watchdog timer
- Event Counter option (P1_4,P1_5) provides capture/counter function to external events for frequency calculation. Provides 1K/32K/1M/16M clock rate option to count the frequency range from 60 Hz to 1 MHz. Continuous/One shot count mode can be selected
- Specific GPIO pins (P1_6, P1_7) support external 32.768 KHz crystal option for RTC
- PWM:
  - 16-bit PWM design
  - 4 Individual frequency and individual duty cycle channel outputs multiplexed with GPIO pin (P2_1, P2_2, P2_3, P2_5)
  - Three clock source (32K, 1M, 16M) selection to program frequency range from 0.488 Hz to 8 MHz
  - Double buffers output compare registers and top register to avoid glitch
  - Two pair output configurable as inverse channel

© 2015-2016 Microchip Technology Inc.

2.3 Host MCU Interface Over UART

Figure 2-2 illustrates IS1870/71 application block diagram. In the diagram the power supply (3.3V), UART interface, and GPIO control and indication are listed.

FIGURE 2-2: IS1870/71 APPLICATION BLOCK DIAGRAM WITH MCU

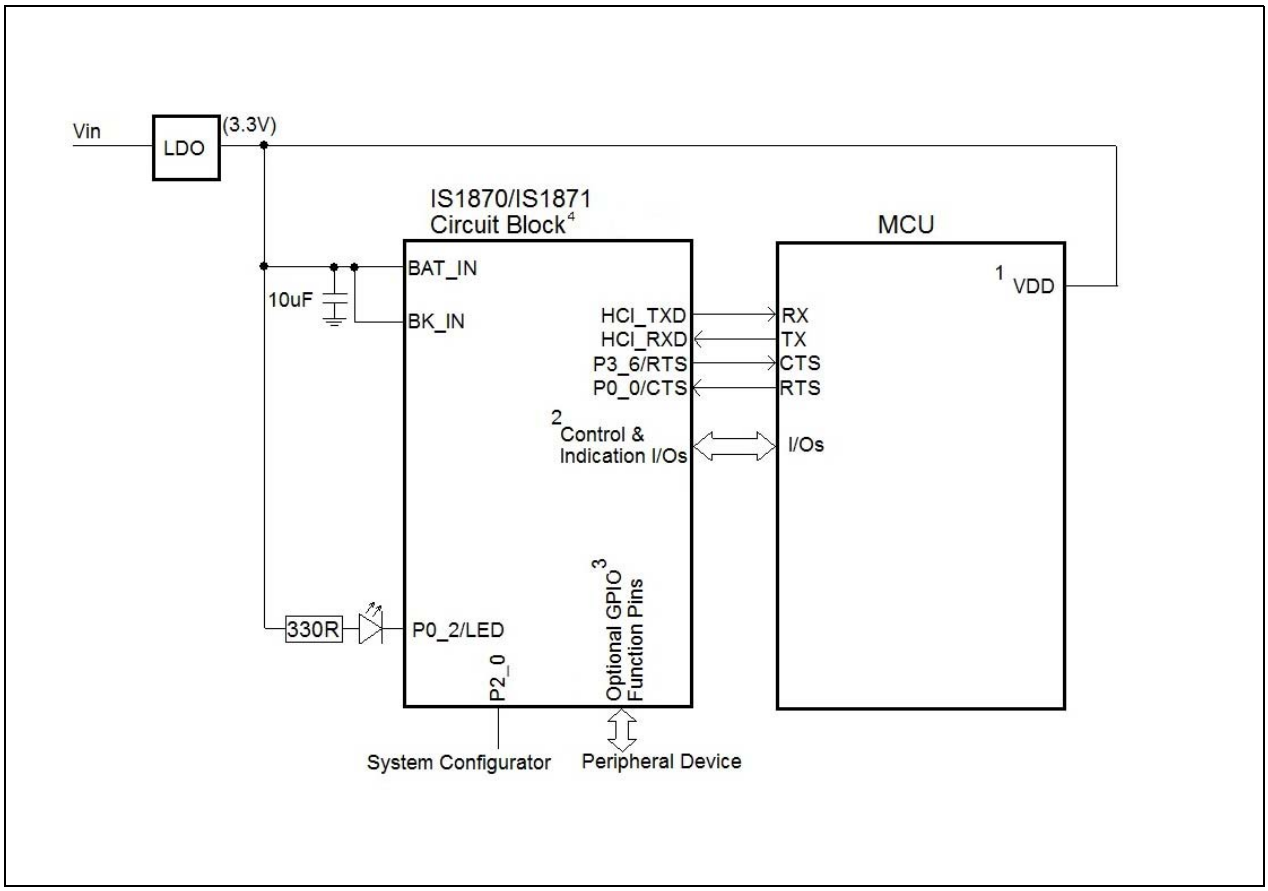

Note 1: Ensure BAT_IN (I/O voltage) and MCU V_{DD} voltage are compatible.

2: The control and indication ports are configurable in UI tool.

3: Optional GPIO function includes ADC, PWM, I^2C and SPI functions.

4: The GPIO applications of the IS1871 depend on the existing pin out and some of the GPIO pins are not supported in the IS1871.

NOTES:

© 2015-2016 Microchip Technology Inc.

3.0 ELECTRICAL CHARACTERISTICS

This section provides an overview of the IS1870/71 electrical characteristics. Additional information will be provided in future revisions of this document.

Absolute maximum ratings for the IS1870/71 devices are listed below. Exposure to the maximum rating conditions for extended periods may affect device reliability. Functional operation of the device at these or any other conditions, above the parameters indicated in the operation listings of this specification, is not implied.

Absolute Maximum Ratings

(See Note 1)

Ambient temperature under bias ..... -20°C to +70°C
Storage temperature ..... -40°C to +125°C
Voltage on V_{DD} with respect to V_{SS} ..... -0.3V to +3.6V
Voltage on any pin with respect to V_{SS} ..... -0.3V to (V_{DD} + 0.3V)
Maximum output current sunk by any I/O pin ..... 12 mA
Maximum output current sourced by any I/O pin ..... 12 mA
ESD (according to machine model, JEDEC EIA/JESD22-A115-C)
Maximum output for all pins, excluding RF Tx pin ..... ±200V
Maximum output for all pins ..... ±150V
Maximum output (human-body model) ..... ±2V
Maximum output (charge-device model) ..... ±150V

Note 1: Stresses above those listed under **"Absolute Maximum Ratings"** may cause permanent damage to the device. This is a stress rating only and functional operation of the device at those or any other conditions, above those indicated in the operation listings of this specification, is not implied. Exposure to maximum rating conditions for extended periods may affect device reliability.

TABLE 3-1: RECOMMENDED OPERATING CONDITIONS

Symbol	Min.	Typ.	Max.
Ambient operating temperature range	–20°C	+25°C	+70°C
PMU			
V_{DD} (V_{BAT}, BK_IN), AV_{DD}	1.9V	3.0V	3.6V
VCC_RF	1.22V	1.28V	1.34V
VCC_PA	1.5V	1.55V	1.98V
CLDO_O, VREF	1.1V	1.2V	1.32V
ULPC_O	1.1V	1.2V	1.32V
RST_N	1.9V	3.0V	3.6V
Other I/O	1.9V	—	3.6V
GPIO			
V_{IH} (Input High Voltage)	0.7 V_{DD}	—	V_{DD}
V_{IL} (Input Low Voltage)	VSS	—	0.3 V_{DD}
V_{OH} (Output High Voltage) (High drive, 12 mA)	0.8 V_{DD}	—	V_{DD}
V_{OL} (Output Low Voltage) (High drive, 12 mA)	VSS	—	0.2 V_{DD}
Pull-up Resistance	34 K	48 K	74 K
Pull-down Resistance	29 K	47 K	86 K
Supply Current			
Tx mode peak current at V_{DD}=3V, Tx=0 dBm, Buck mode	—	—	13 mA
Rx mode peak current at V_{DD}=3V, Buck mode	—	—	13 mA
Link static current		60 µA	
Standby current	1.9 µA	—	2.9 µA
Power-Saving	1 µA	—	1.7 µA
Analog-to-Digital Converter (ADC)			
Full scale (BAT_IN)	0V	3.0V	3.6V
Full scale (AD0~AD15)	0V	—	3.6V
Conversion time (ENOB 8-bit)	—	131 µS	—
Conversion time (ENOB 10-bit)	—	387 µS	—
Operating current	—	—	500 µA
DNL	-1.12 LSB	—	+1.12 LSB
INL	-4.38 LSB	—	+4.38 LSB
Precise Temperature Sensor (PTS)			
Detect range	-20°C	—	+70°C
Digital Output	1387	—	2448
Resolution	—	12-bits/°C	—
Accuracy	-3°C	—	+3°C
Conversion time (ENOB 10-bit)	—	12.35 ms	—
Operating current	—	—	200 µA

© 2015-2016 Microchip Technology Inc.

3.1 Current Consumption Details

3.1.1 Tx/Rx CURRENT CONSUMPTION DETAILS

Figure 3-1 and Figure 3-2 illustrate the Tx/Rx peak and average current consumption of advertising event in the BLEDK3 beacon mode application.

The peak current of the VBAT input is 12 mA and the average current is around 0.23 mA. In this example the advertising interval is 100 ms and current consumption is measured at 3.3V VBAT input.

FIGURE 3-1: Tx/Rx PEAK CURRENT CONSUMPTION IN BLEDK3 BEACON MODE APPLICATION



FIGURE 3-2: Tx/Rx AVERAGE CURRENT CONSUMPTION IN BLEDK3 BEACON MODE APPLICATION



For additional information on the current consumption measurements, test condition, and test environment setup, refer to the "*IS187x_BM7x BLEDK3 Application Note*". This Application Note covers detailed information about the status of the BLEDK3 application.

Table 3-2 provides the status details of the BLEDK3 application.

TABLE 3-2: STATUS DETAILS OF BLEDK3 APPLICATION

Status	Description
Shutdown Mode	BLEDK3 is shutdown
Standby Mode	BLEDK3 sends advertising packets and wait for connection. BLEDK3 is discoverable and connectible
BLE Connected Mode	BLE link is established and CCCD of ISSC_Transparent_Tx characteristic is disabled (see **Note 1**)
Transparent Service Enabled Mode	BLE link is established and CCCD of ISSC_Transparent_Tx characteristic is enabled (see **Note 1**)

Note 1: Client Characteristic Configuration (CCCD) is GATT service characteristics.

© 2015-2016 Microchip Technology Inc.

4.0 PACKAGE INFORMATION

Figure 4-1 through Figure 4-5 illustrate the package marking information of the IS1870SF IC.

4.1 48QFN, 6x6 mm Chip Outline (IS1870SF)

FIGURE 4-1: 48QFN, 6X6 MM PACKAGE INFORMATION (IS1870SF)

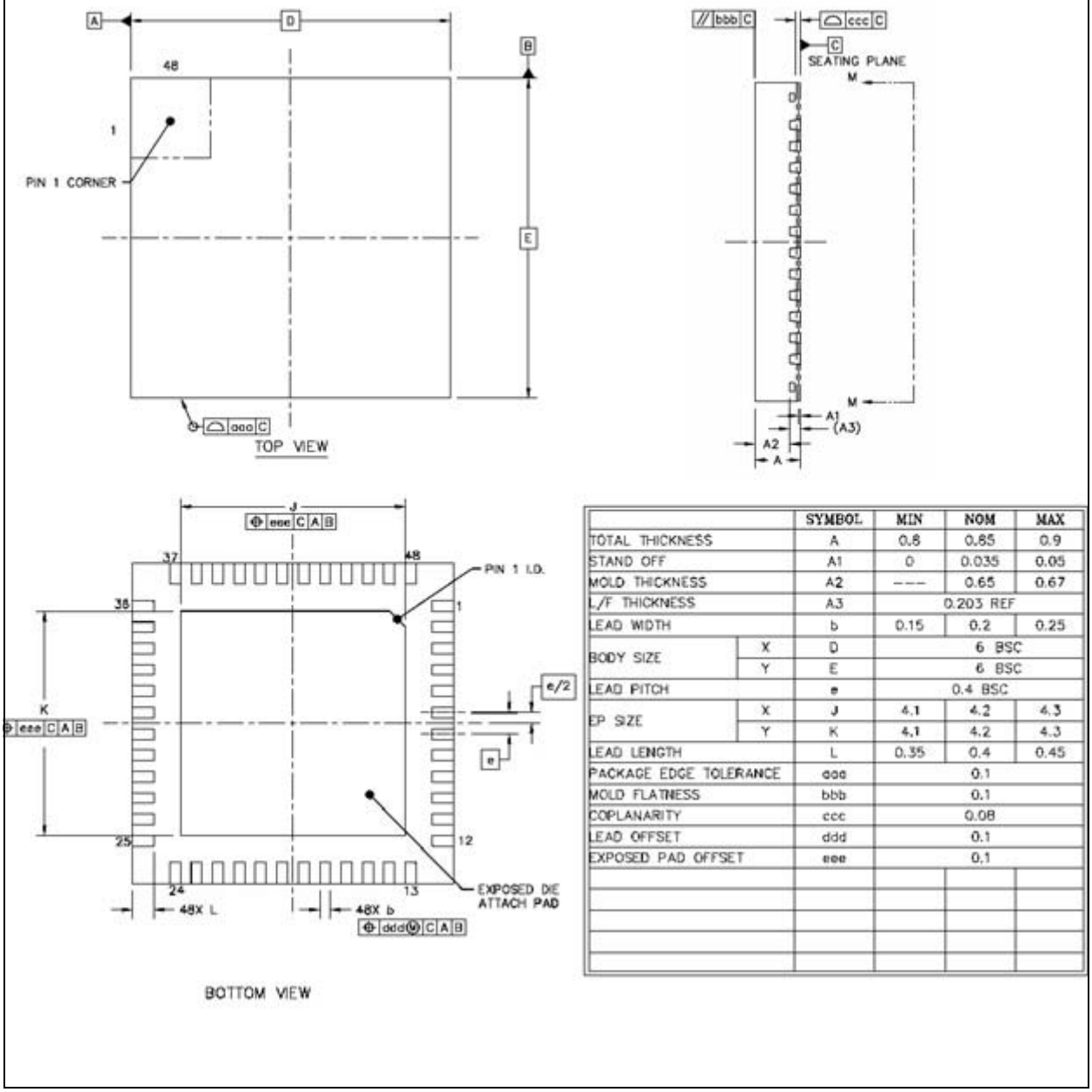

		SYMBOL	MIN	NOM	MAX
TOTAL THICKNESS		A	0.8	0.85	0.9
STAND OFF		A1	0	0.035	0.05
MOLD THICKNESS		A2	---	0.65	0.67
L/F THICKNESS		A3		0.203 REF	
LEAD WIDTH		b	0.15	0.2	0.25
BODY SIZE	X	D		6 BSC	
	Y	E		6 BSC	
LEAD PITCH		e		0.4 BSC	
EP SIZE	X	J	4.1	4.2	4.3
	Y	K	4.1	4.2	4.3
LEAD LENGTH		L	0.35	0.4	0.45
PACKAGE EDGE TOLERANCE		aaa		0.1	
MOLD FLATNESS		bbb		0.1	
COPLANARITY		ccc		0.08	
LEAD OFFSET		ddd		0.1	
EXPOSED PAD OFFSET		eee		0.1	

FIGURE 4-2: 48QFN, 6X6 MM FOOTPRINT INFORMATION (IS1870SF)

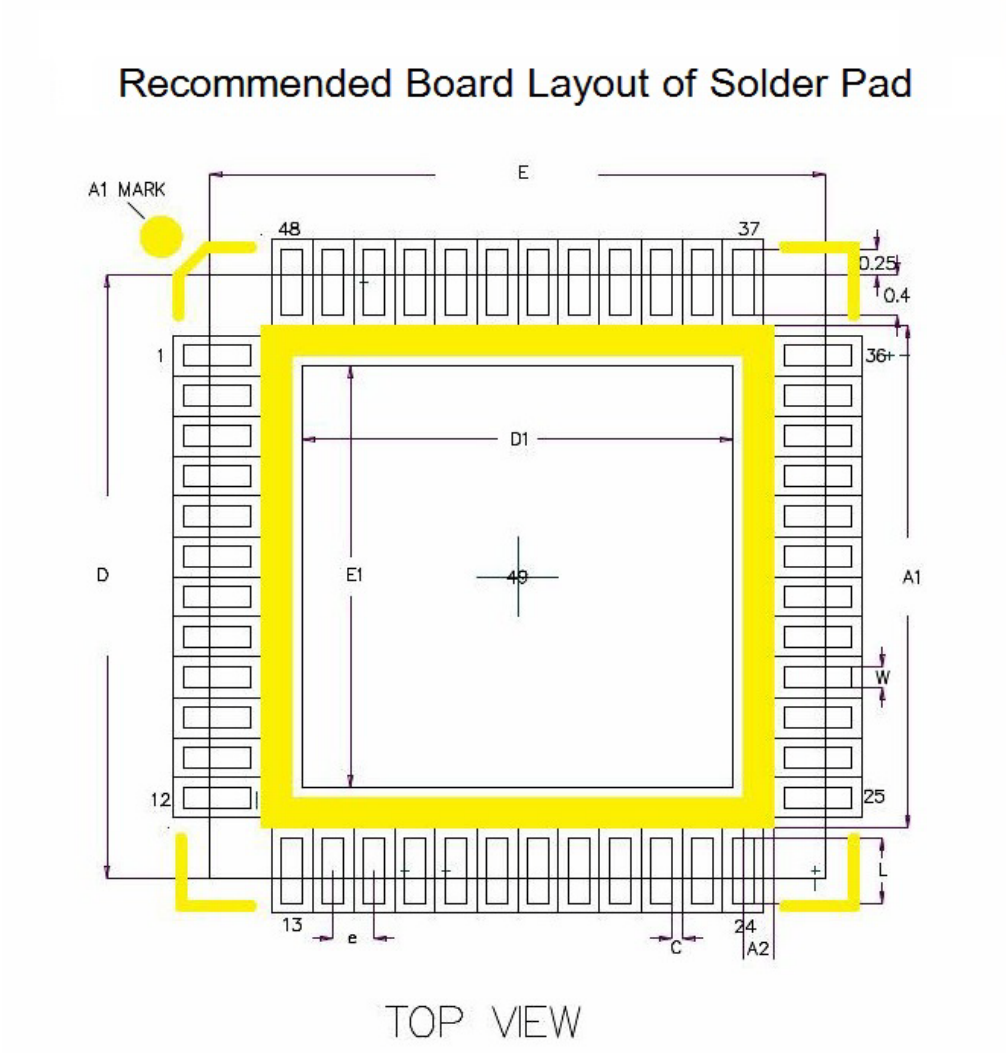

	SYMBOL	COMMON DIMENSIONS		
		MIN.	NOR.	MAX.
SLKSCREEN TOP L	A1		5	REF
SLKSCREEN TOP W	A2		0.3	REF
BODY SIZE	D		6	BSC
	E		6	BSC
EXPOSED PAD SIZE	D1		4.2	BSC
	E1		4.2	BSC
LEAD LENGTH	L		0.65	
LEAD WIDTH	W		0.2	
SOLDER MASKER OPEN	c		0.1	
LEAD PICTH	e		0.4	
LEAD COUNT	n1		48	

UNIT : MM

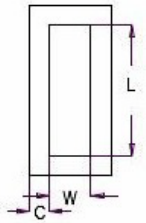

SOLDERMASK OPENING OUTSIDE OF LAND

SCALE 2:1

© 2015-2016 Microchip Technology Inc.

4.2 32QFN, 4x4 mm Chip Outline (IS1871SF)

FIGURE 4-3: 32QFN, 4X4 MM PACKAGE SIZE INFORMATION (IS1871SF)

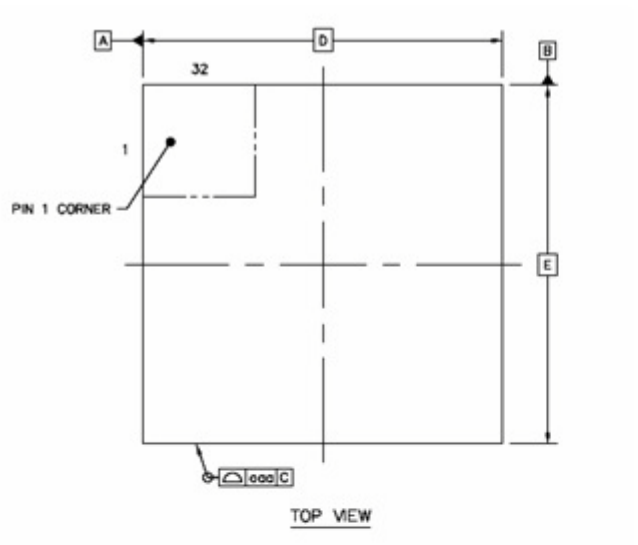

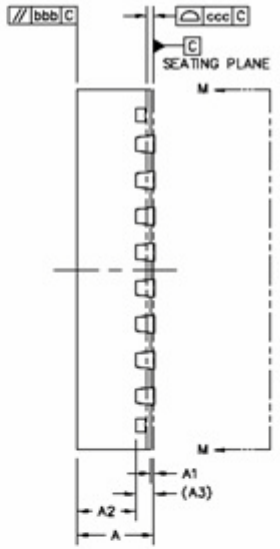

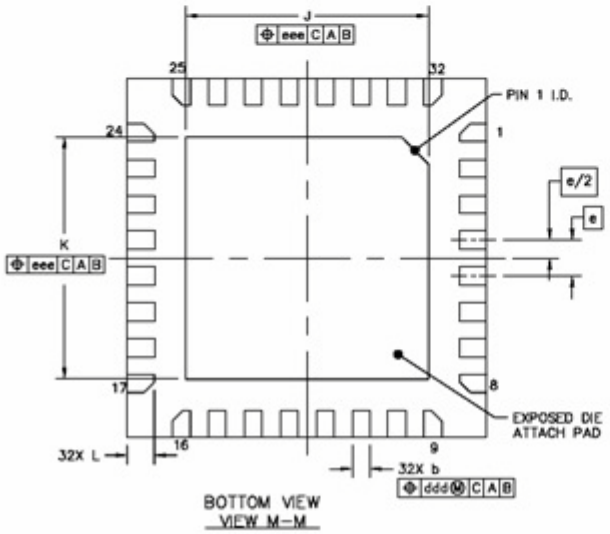

		SYMBOL	MIN	NOM	MAX
TOTAL THICKNESS		A	0.8	0.85	0.9
STAND OFF		A1	0	0.035	0.05
MOLD THICKNESS		A2	---	0.65	0.67
L/F THICKNESS		A3		0.203 REF	
LEAD WIDTH		b	0.15	0.2	0.25
BODY SIZE	X	D		4 BSC	
	Y	E		4 BSC	
LEAD PITCH		e		0.4 BSC	
EP SIZE	X	J	2.6	2.7	2.8
	Y	K	2.6	2.7	2.8
LEAD LENGTH		L	0.25	0.3	0.35
PACKAGE EDGE TOLERANCE		aaa		0.1	
MOLD FLATNESS		bbb		0.1	
COPLANARITY		ccc		0.08	
LEAD OFFSET		ddd		0.1	
EXPOSED PAD OFFSET		eee		0.1	

FIGURE 4-4: 32QFN FOOTPRINT INFORMATION (IS1871SF)

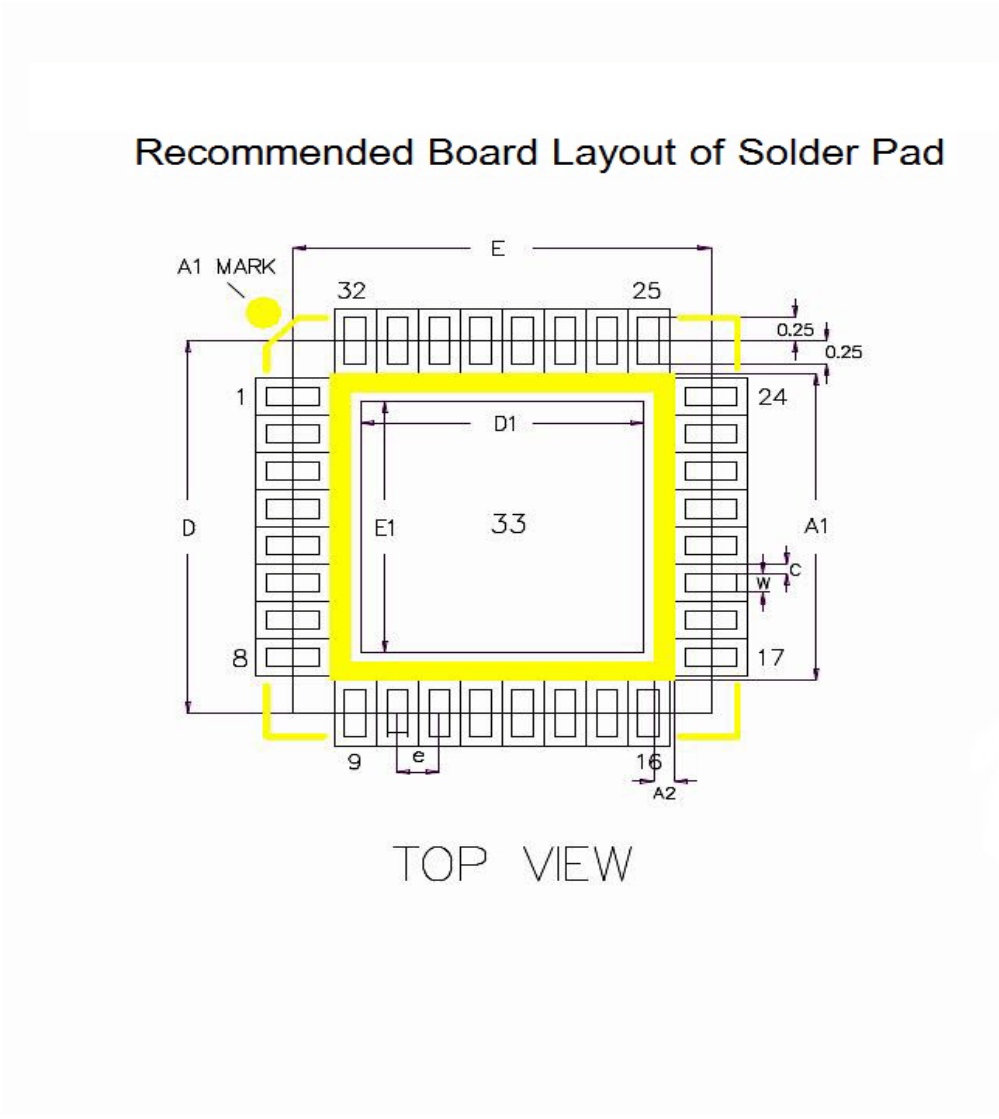

	SYMBOL	COMMON DIMENSIONS		
		MIN.	NOR.	MAX.
SILKSCREEN TOP L	A1		3.3	REF
SILKSCREEN TOP W	A2		0.2	REF
BODY SIZE	D		4	BSC
	E		4	BSC
EXPOSED PAD SIZE	D1		2.7	BSC
	E1		2.7	BSC
LEAD LENGTH	L		0.5	
LEAD WIDTH	W		0.2	
SOLDER MASKER OPEN	c		0.1	
LEAD PICTH	e		0.4	
LEAD COUNT	n1		32	

UNIT : MM

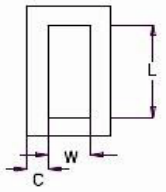

SOLDERMASK OPENING OUTSIDE OF LAND

SCALE 2:1

© 2015-2016 Microchip Technology Inc.

FIGURE 4-5: PACKAGE MARKING INFORMATION

48-Lead QFN (6x6x0.9 mm)

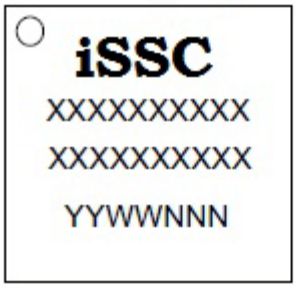

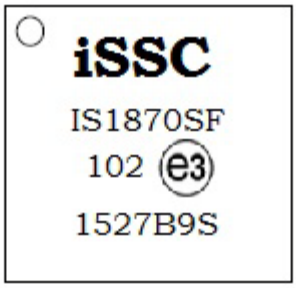

32-Lead QFN (4x4x0.9 mm)

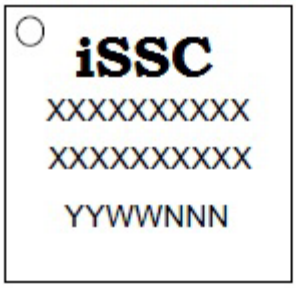

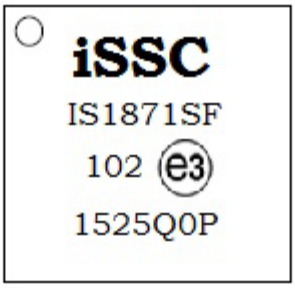

Legend:	XX...X	Customer-specific information
	Y	Year code (last digit of calendar year)
	YY	Year code (last 2 digits of calendar year)
	WW	Week code (week of January 1 is week '01')
	NNN	Alphanumeric traceability code
		Pb-free JEDEC designator for Matte Tin (Sn)
	*	This package is Pb-free. The Pb-free JEDEC designator (e3) can be found on the outer packaging for this package.

Note: In the event the full Microchip part number cannot be marked on one line, it will be carried over to the next line, thus limiting the number of available characters for customer-specific information.

NOTES:

© 2015-2016 Microchip Technology Inc.

5.0 REFLOW PROFILE AND STORAGE CONDITION

Figure 5-1 and Figure 5-2 illustrate reflow profiles and stencil information of the IS1870/71 SoC.

5.1 Stencil of SMT Assembly Suggestion

5.1.1 STENCIL TYPE & THICKNESS

- Laser cutting
- Stainless steel
- Thickness: 0.5 mm pitch, thickness < 0.15 mm

5.1.2 APERTURE SIZE AND SHAPE FOR TERMINAL PAD

- Aspect ratio (width/thickness) >1.5
- Aperture shape
  - The stencil aperture is designed to match the pad size on the PCB.
  - Oval-shape opening should be used to get the optimum paste release.
  - Rounded corners to minimize clogging.
  - Positive taper walls (5° tapering) with bottom opening larger than the top.

5.1.3 APERTURE DESIGN FOR THERMAL PAD

- Small multiple openings should be used instead of one big opening.
- 60~80% solder paste coverage
- Rounded corners to minimize clogging
- Positive taper walls (5° tapering) with bottom opening larger than the top

FIGURE 5-1: REFLOW PROFILE

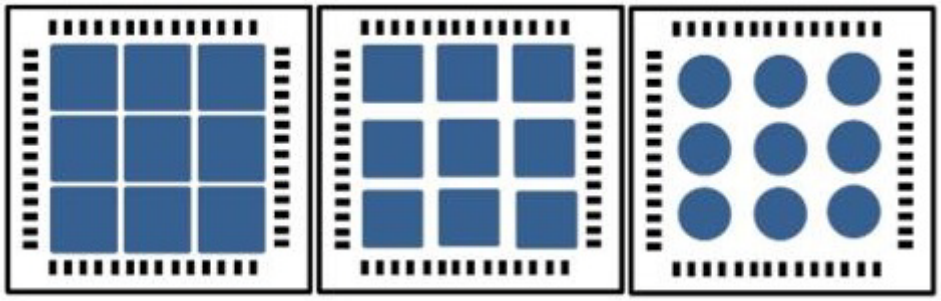

FIGURE 5-2: STENCIL TYPE

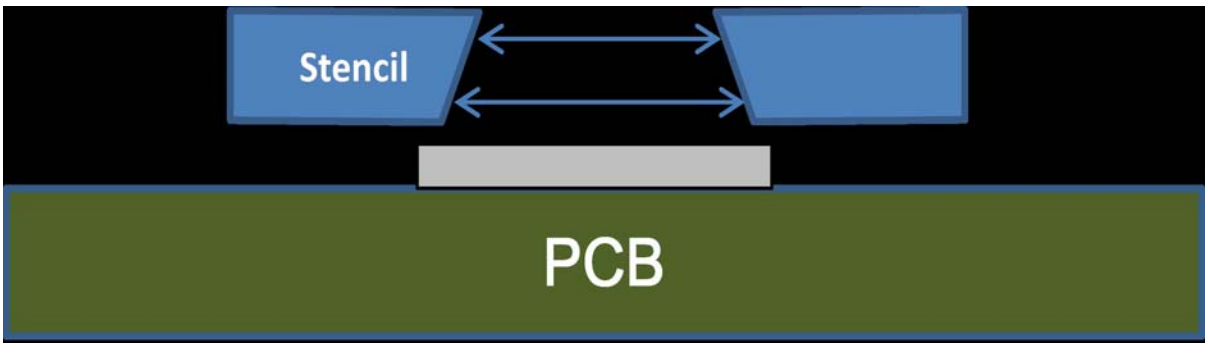

5.2 260 ℃ Reflow Profile

Figure 5-3 illustrates the reflow profile and the following are its specific features:

- Standard Condition: IPC/JEDEC J-STD-020
- Preheat: 150~200 ℃ ~60~120 seconds
- Average ramp-up rate (+217℃ to peak): +3℃/sec max
- Temperature maintained above 217: 60~150 seconds
- Time within +5 ℃ of peak temperature: 30 ~ 40 seconds
- Peak temperature: 260 +5/-0 ℃
- Ramp-down rate (peak to +217℃): +6℃/sec. max
- Time +25 ℃ to peak temperature: 8 minutes max
- Cycle interval: 5 minutes

FIGURE 5-3: REFLOW PROFILE

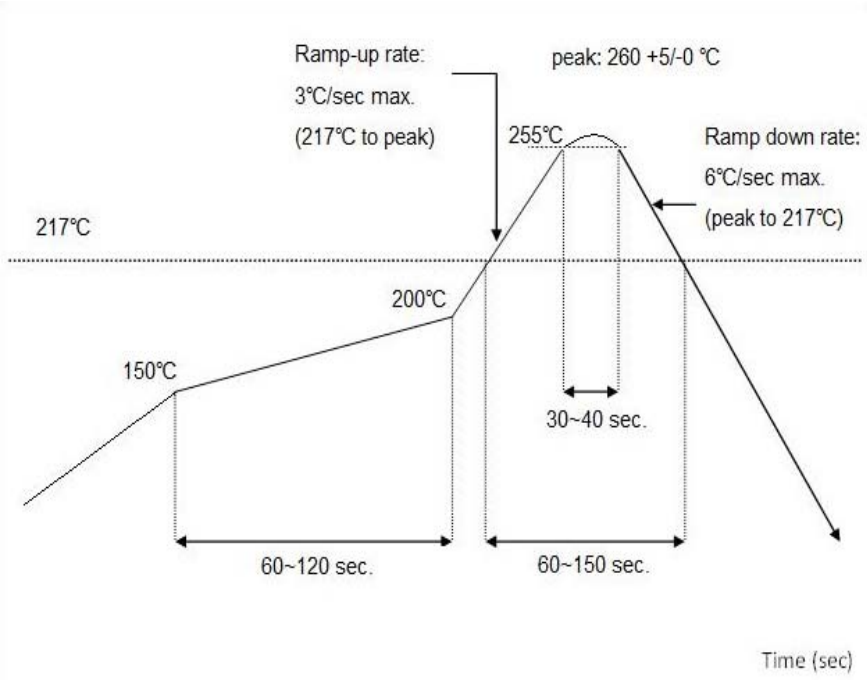

© 2015-2016 Microchip Technology Inc.

5.3 Storage Condition

Users need to follow these specific storage conditions for the IS1870x SoC.

- The calculated shelf life in the sealed bag is 24 months at <40 ℃ and <90% Relative Humidity (RH).
- After the bag is opened, devices that are subjected to reflow solder or other high temperature process must be mounted within 168 hours of factory conditions, i.e <30 ℃ /60% RH.

NOTES:

© 2015-2016 Microchip Technology Inc.

6.0 ORDERING GUIDE

Table 6-1 provides the ordering information for the IS1870/71.

TABLE 6-1: ORDERING GUIDE

Device	Bluetooth Version	Package	Part No.
IS1870	Bluetooth Low Energy SoC, BLE 4.2 compliant	48-Lead QFN, 6x6x0.9 mm^3, 0.4 mm pitch	IS1870SF
IS1871	Bluetooth Low Energy SoC, BLE 4.2 compliant	32-Lead QFN, 4x4x0.9 mm^3, 0.4 mm pitch	IS1871SF

NOTES:

© 2015-2016 Microchip Technology Inc.

APPENDIX A: REFERENCE CIRCUIT

Figure A-1 and Figure A-3 illustrate a typical application circuit of the IS1870 and IS1871.

The application circuit lists the RF matching circuit, PMU power tree, LED option, test points, and configuration table. The GPIOs can be configured to general I/O functions or the function of ADC, PTS, PWM, and external 32.768 kHz crystal.

FIGURE A-1: IS1870 APPLICATION CIRCUIT

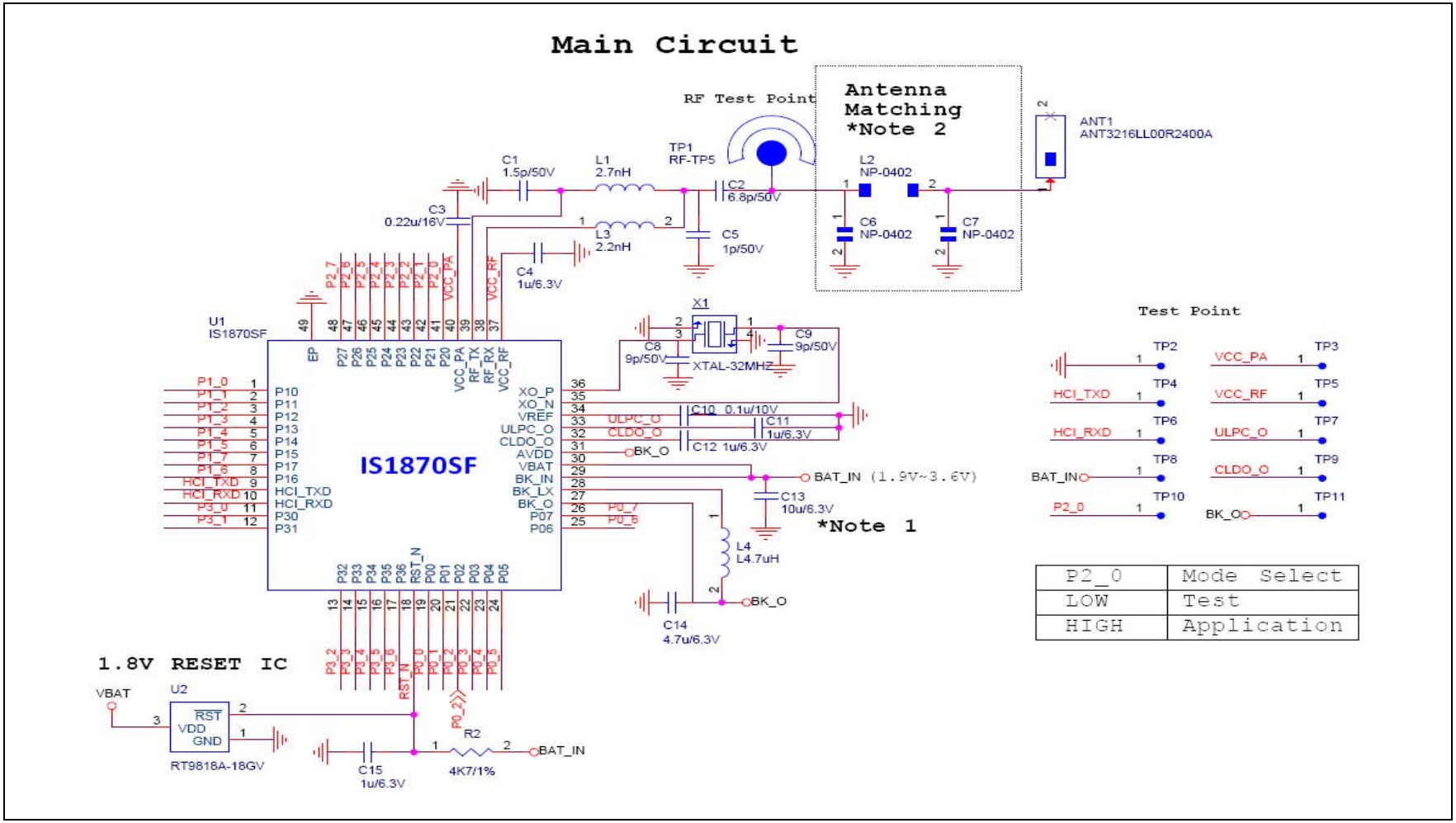

Note 1: The C13, C14, L4, C12, C11, C10, C3, and C4 should be as close to the chip as possible.

2: The value of the antenna matching component depends on the user's antenna and PCB layout.

© 2015-2016 Microchip Technology Inc.

FIGURE A-2: IS1870 APPLICATION CIRCUIT (OPTIONAL)

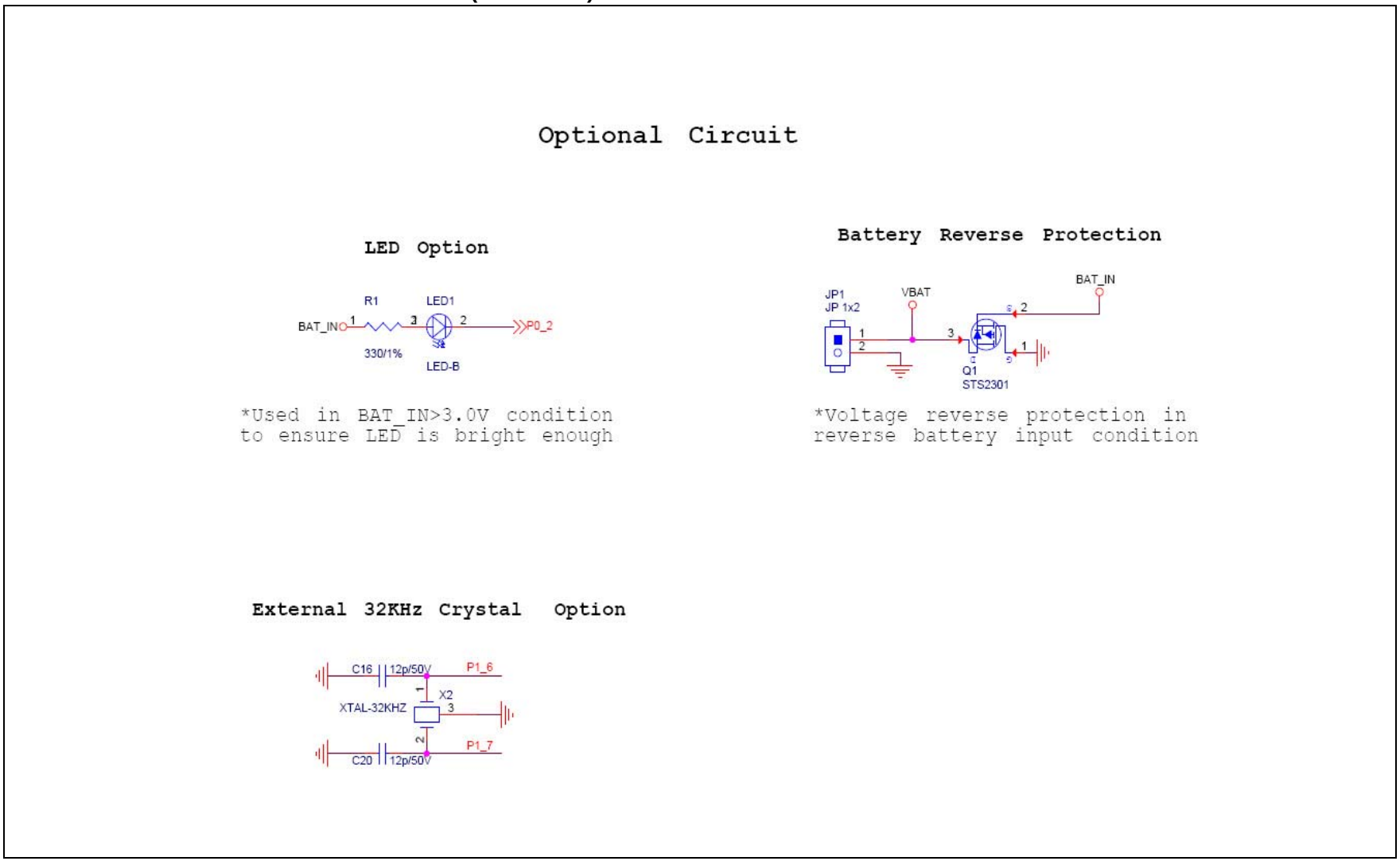

© 2015-2016 Microchip Technology Inc.

© 2015-2016 Microchip Technology Inc.

FIGURE A-3: IS1871 APPLICATION CIRCUIT

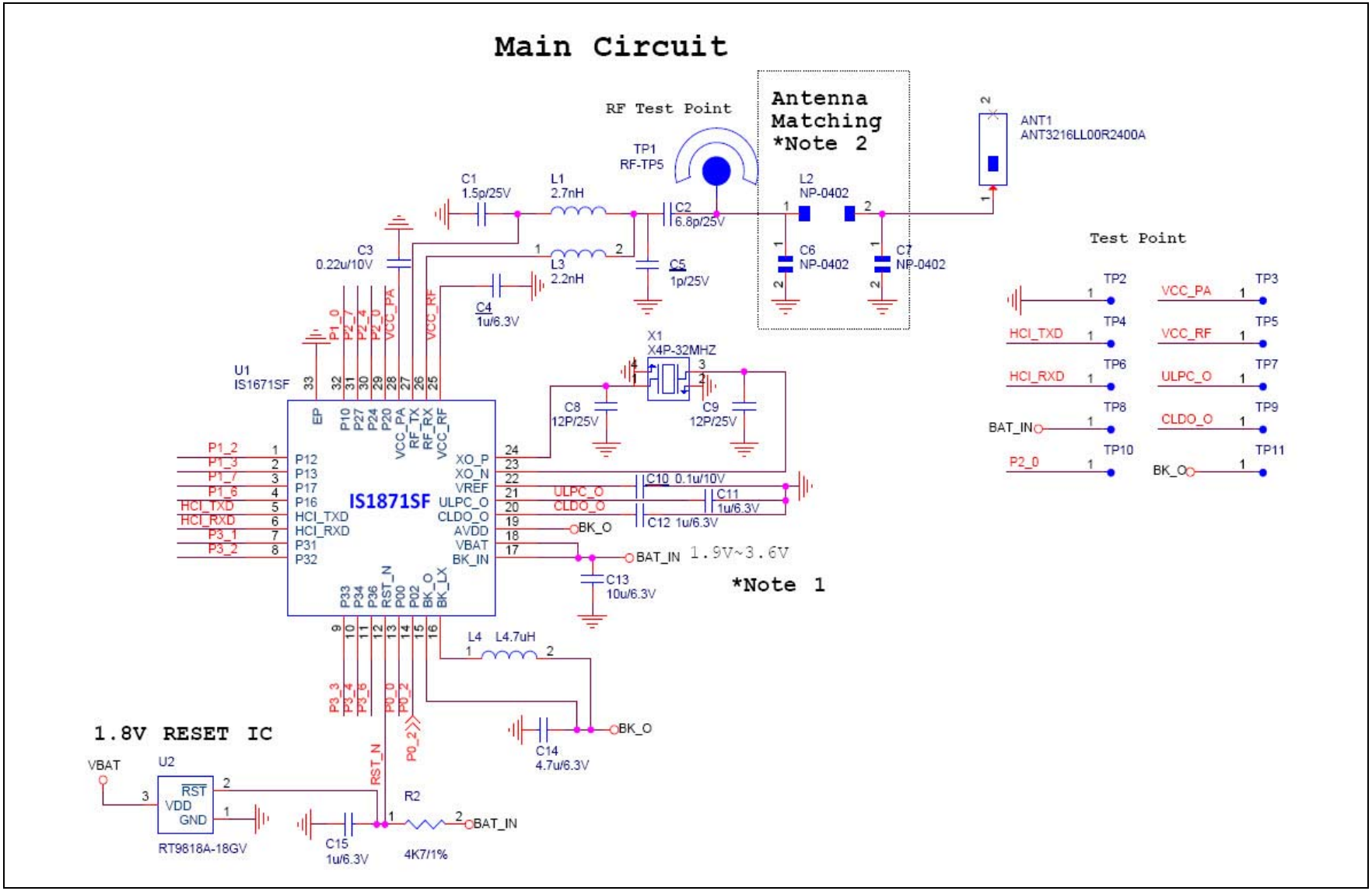

Note 1: The C13, C14, L4, C12, C11, C10, C3, and C4 should be as close to the chip as possible.

2: The value of the antenna matching component depends on the user's antenna and PCB layout.

FIGURE A-4: IS1871 APPLICATION CIRCUIT (OPTIONAL)

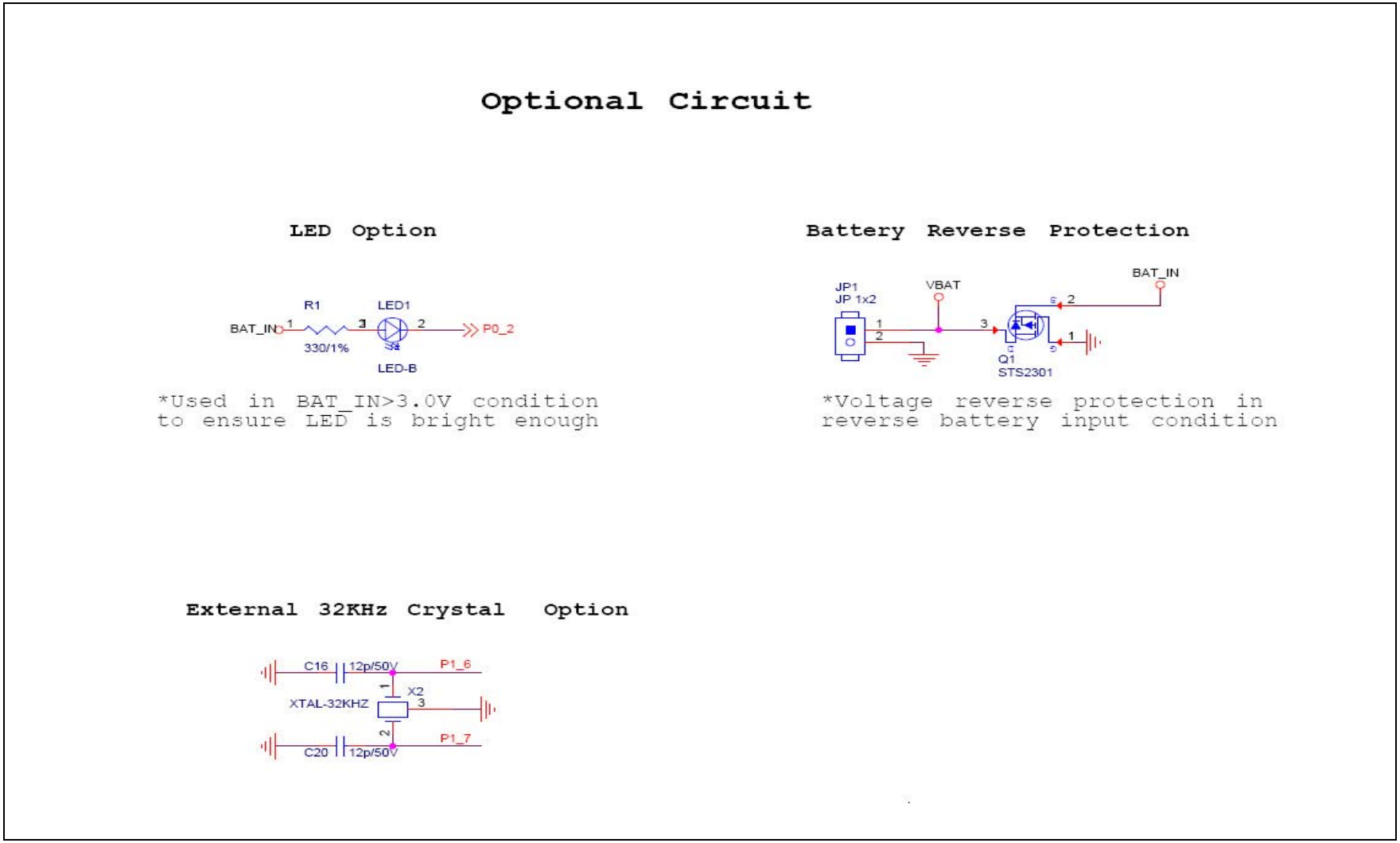

© 2015-2016 Microchip Technology Inc.

APPENDIX B: LAYOUT GUIDELINES

B.1 RF Matching

The RF traces (including Tx, Rx, and antenna path) on the PCB should match 50Ω impedance. In Figure A-1, value of L1, L3, C1, C2, and C5 are fixed. The antenna matching components C6, C7, and L2 should be adjusted to match the 50Ω 2.4 GHz antenna.

B.2 PMU

The PMU section components, such as V_{BAT}, BK_IN, BK_O, BK_LX, AV_{DD}, ULPC_O, CLDO_O, V_{REF} should be kept close to the IS1870/71.

For additional information on PCB design guidelines, contact your local Microchip sales office. A list of Microchip sales offices is given on the back page of this document,.

The L4 and C14 of Buck section, shown in Figure A-1, should be selected carefully. Capacitor C14 is either 4.7 µF/6.3V, X5R, or X7R type. The inductor L4 need to be high current (I_{DC}>300mA) and low DCR (<1Ω) type.

B.3 Crystal

The XI 32 MHz crystal specification should be within the ±10 ppm range, see Figure A-1.

NOTES:

© 2015-2016 Microchip Technology Inc.

APPENDIX C: REVISION HISTORY

Revision A (October 2015)

This is the initial released version of this document.

Revision B (October 2015)

This revision includes the following changes as well as minor updates to text and formatting, which were incorporated throughout the document.

Status	Description
Section "Features"	The section has been updated with new information.
Section "Packages"	The section is updated with the package information.
Section 1.0 "Device Overview"	Updated Figure 1-1 and Figure 1-2. Added Table 1-1

Revision C (March 2016)

This revision includes the following changes and minor updates to text and formatting, which were incorporated throughout the document.

Status	Description
Section "Features"	The section is updated with new information.
Section 1.0 "Device Overview"	Updated Figure 1-1 and Figure 1-2. Updated Table 1-1 and Table 1-2.
Section 2.0 "System Block Details"	Updated **2.2 "System Block Specification"** and **2.3 "Host MCU Interface Over UART"** with new information.
Section 3.0 "Electrical Characteristics"	Updated **3.1.1 "Tx/Rx Current Consumption Details"**. Updated Figure 3-1 and Figure 3-2. Updated Table 3-1 and Table 3-2.
Section 5.3 "Storage Condition"	Deleted Figure 5-4.
Section 6.0 "Ordering Guide"	Updated Table 6-1
Appendix A: "Reference Circuit"	Updated Figure A-1 and Figure A-3 Added Figure A-2 and Figure A-4
Appendix C: Bill of Material	Deleted

NOTES:

© 2015-2016 Microchip Technology Inc.

THE MICROCHIP WEB SITE

Microchip provides online support via our WWW site at www.microchip.com. This web site is used as a means to make files and information easily available to customers. Accessible by using your favorite Internet browser, the web site contains the following information:

- **Product Support** – Data sheets and errata, application notes and sample programs, design resources, user's guides and hardware support documents, latest software releases and archived software
- **General Technical Support** – Frequently Asked Questions (FAQ), technical support requests, online discussion groups, Microchip consultant program member listing
- **Business of Microchip** – Product selector and ordering guides, latest Microchip press releases, listing of seminars and events, listings of Microchip sales offices, distributors and factory representatives

CUSTOMER CHANGE NOTIFICATION SERVICE

Microchip's customer notification service helps keep customers current on Microchip products. Subscribers will receive e-mail notification whenever there are changes, updates, revisions or errata related to a specified product family or development tool of interest.

To register, access the Microchip web site at www.microchip.com. Under "Support", click on "Customer Change Notification" and follow the registration instructions.

CUSTOMER SUPPORT

Users of Microchip products can receive assistance through several channels:

- Distributor or Representative
- Local Sales Office
- Field Application Engineer (FAE)
- Technical Support

Customers should contact their distributor, representative or Field Application Engineer (FAE) for support. Local sales offices are also available to help customers. A listing of sales offices and locations is included in the back of this document.

Technical support is available through the web site at: **http://microchip.com/support.**

NOTES:

© 2015-2016 Microchip Technology Inc.

Note the following details of the code protection feature on Microchip devices:

- Microchip products meet the specification contained in their particular Microchip Data Sheet.
- Microchip believes that its family of products is one of the most secure families of its kind on the market today, when used in the intended manner and under normal conditions.
- There are dishonest and possibly illegal methods used to breach the code protection feature. All of these methods, to our knowledge, require using the Microchip products in a manner outside the operating specifications contained in Microchip's Data Sheets. Most likely, the person doing so is engaged in theft of intellectual property.
- Microchip is willing to work with the customer who is concerned about the integrity of their code.
- Neither Microchip nor any other semiconductor manufacturer can guarantee the security of their code. Code protection does not mean that we are guaranteeing the product as "unbreakable."

Code protection is constantly evolving. We at Microchip are committed to continuously improving the code protection features of our products. Attempts to break Microchip's code protection feature may be a violation of the Digital Millennium Copyright Act. If such acts allow unauthorized access to your software or other copyrighted work, you may have a right to sue for relief under that Act.

Information contained in this publication regarding device applications and the like is provided only for your convenience and may be superseded by updates. It is your responsibility to ensure that your application meets with your specifications. MICROCHIP MAKES NO REPRESENTATIONS OR WARRANTIES OF ANY KIND WHETHER EXPRESS OR IMPLIED, WRITTEN OR ORAL, STATUTORY OR OTHERWISE, RELATED TO THE INFORMATION, INCLUDING BUT NOT LIMITED TO ITS CONDITION, QUALITY, PERFORMANCE, MERCHANTABILITY OR FITNESS FOR PURPOSE**.** Microchip disclaims all liability arising from this information and its use. Use of Microchip devices in life support and/or safety applications is entirely at the buyer's risk, and the buyer agrees to defend, indemnify and hold harmless Microchip from any and all damages, claims, suits, or expenses resulting from such use. No licenses are conveyed, implicitly or otherwise, under any Microchip intellectual property rights unless otherwise stated.

Microchip received ISO/TS-16949:2009 certification for its worldwide headquarters, design and wafer fabrication facilities in Chandler and Tempe, Arizona; Gresham, Oregon and design centers in California and India. The Company's quality system processes and procedures are for its PIC® MCUs and dsPIC® DSCs, KEELOQ® code hopping devices, Serial EEPROMs, microperipherals, nonvolatile memory and analog products. In addition, Microchip's quality system for the design and manufacture of development systems is ISO 9001:2000 certified.

QUALITY MANAGEMENT SYSTEM
CERTIFIED BY DNV
═ ISO/TS 16949 ═

Trademarks

The Microchip name and logo, the Microchip logo, AnyRate, dsPIC, FlashFlex, flexPWR, Heldo, JukeBlox, KeeLoq, KeeLoq logo, Kleer, LANCheck, LINK MD, MediaLB, MOST, MOST logo, MPLAB, OptoLyzer, PIC, PICSTART, PIC32 logo, RightTouch, SpyNIC, SST, SST Logo, SuperFlash and UNI/O are registered trademarks of Microchip Technology Incorporated in the U.S.A. and other countries.

ClockWorks, The Embedded Control Solutions Company, ETHERSYNCH, Hyper Speed Control, HyperLight Load, IntelliMOS, mTouch, Precision Edge, and QUIET-WIRE are registered trademarks of Microchip Technology Incorporated in the U.S.A.

Analog-for-the-Digital Age, Any Capacitor, AnyIn, AnyOut, BodyCom, chipKIT, chipKIT logo, CodeGuard, dsPICDEM, dsPICDEM.net, Dynamic Average Matching, DAM, ECAN, EtherGREEN, In-Circuit Serial Programming, ICSP, Inter-Chip Connectivity, JitterBlocker, KleerNet, KleerNet logo, MiWi, motorBench, MPASM, MPF, MPLAB Certified logo, MPLIB, MPLINK, MultiTRAK, NetDetach, Omniscient Code Generation, PICDEM, PICDEM.net, PICkit, PICtail, PureSilicon, RightTouch logo, REAL ICE, Ripple Blocker, Serial Quad I/O, SQI, SuperSwitcher, SuperSwitcher II, Total Endurance, TSHARC, USBCheck, VariSense, ViewSpan, WiperLock, Wireless DNA, and ZENA are trademarks of Microchip Technology Incorporated in the U.S.A. and other countries.

SQTP is a service mark of Microchip Technology Incorporated in the U.S.A.

Silicon Storage Technology is a registered trademark of Microchip Technology Inc. in other countries.

GestIC is a registered trademarks of Microchip Technology Germany II GmbH & Co. KG, a subsidiary of Microchip Technology Inc., in other countries.

All other trademarks mentioned herein are property of their respective companies.

© 2015-2016, Microchip Technology Incorporated, Printed in the U.S.A., All Rights Reserved.

ISBN: 978-1-5224-0411-8

Worldwide Sales and Service

AMERICAS

Corporate Office
2355 West Chandler Blvd.
Chandler, AZ 85224-6199
Tel: 480-792-7200
Fax: 480-792-7277
Technical Support:
http://www.microchip.com/support
Web Address:
www.microchip.com

Atlanta
Duluth, GA
Tel: 678-957-9614
Fax: 678-957-1455

Austin, TX
Tel: 512-257-3370

Boston
Westborough, MA
Tel: 774-760-0087
Fax: 774-760-0088

Chicago
Itasca, IL
Tel: 630-285-0071
Fax: 630-285-0075

Cleveland
Independence, OH
Tel: 216-447-0464
Fax: 216-447-0643

Dallas
Addison, TX
Tel: 972-818-7423
Fax: 972-818-2924

Detroit
Novi, MI
Tel: 248-848-4000

Houston, TX
Tel: 281-894-5983

Indianapolis
Noblesville, IN
Tel: 317-773-8323
Fax: 317-773-5453

Los Angeles
Mission Viejo, CA
Tel: 949-462-9523
Fax: 949-462-9608

New York, NY
Tel: 631-435-6000

San Jose, CA
Tel: 408-735-9110

Canada - Toronto
Tel: 905-673-0699
Fax: 905-673-6509

ASIA/PACIFIC

Asia Pacific Office
Suites 3707-14, 37th Floor
Tower 6, The Gateway
Harbour City, Kowloon

Hong Kong
Tel: 852-2943-5100
Fax: 852-2401-3431

Australia - Sydney
Tel: 61-2-9868-6733
Fax: 61-2-9868-6755

China - Beijing
Tel: 86-10-8569-7000
Fax: 86-10-8528-2104

China - Chengdu
Tel: 86-28-8665-5511
Fax: 86-28-8665-7889

China - Chongqing
Tel: 86-23-8980-9588
Fax: 86-23-8980-9500

China - Dongguan
Tel: 86-769-8702-9880

China - Hangzhou
Tel: 86-571-8792-8115
Fax: 86-571-8792-8116

China - Hong Kong SAR
Tel: 852-2943-5100
Fax: 852-2401-3431

China - Nanjing
Tel: 86-25-8473-2460
Fax: 86-25-8473-2470

China - Qingdao
Tel: 86-532-8502-7355
Fax: 86-532-8502-7205

China - Shanghai
Tel: 86-21-5407-5533
Fax: 86-21-5407-5066

China - Shenyang
Tel: 86-24-2334-2829
Fax: 86-24-2334-2393

China - Shenzhen
Tel: 86-755-8864-2200
Fax: 86-755-8203-1760

China - Wuhan
Tel: 86-27-5980-5300
Fax: 86-27-5980-5118

China - Xian
Tel: 86-29-8833-7252
Fax: 86-29-8833-7256

ASIA/PACIFIC

China - Xiamen
Tel: 86-592-2388138
Fax: 86-592-2388130

China - Zhuhai
Tel: 86-756-3210040
Fax: 86-756-3210049

India - Bangalore
Tel: 91-80-3090-4444
Fax: 91-80-3090-4123

India - New Delhi
Tel: 91-11-4160-8631
Fax: 91-11-4160-8632

India - Pune
Tel: 91-20-3019-1500

Japan - Osaka
Tel: 81-6-6152-7160
Fax: 81-6-6152-9310

Japan - Tokyo
Tel: 81-3-6880- 3770
Fax: 81-3-6880-3771

Korea - Daegu
Tel: 82-53-744-4301
Fax: 82-53-744-4302

Korea - Seoul
Tel: 82-2-554-7200
Fax: 82-2-558-5932 or
82-2-558-5934

Malaysia - Kuala Lumpur
Tel: 60-3-6201-9857
Fax: 60-3-6201-9859

Malaysia - Penang
Tel: 60-4-227-8870
Fax: 60-4-227-4068

Philippines - Manila
Tel: 63-2-634-9065
Fax: 63-2-634-9069

Singapore
Tel: 65-6334-8870
Fax: 65-6334-8850

Taiwan - Hsin Chu
Tel: 886-3-5778-366
Fax: 886-3-5770-955

Taiwan - Kaohsiung
Tel: 886-7-213-7828

Taiwan - Taipei
Tel: 886-2-2508-8600
Fax: 886-2-2508-0102

Thailand - Bangkok
Tel: 66-2-694-1351
Fax: 66-2-694-1350

EUROPE

Austria - Wels
Tel: 43-7242-2244-39
Fax: 43-7242-2244-393

Denmark - Copenhagen
Tel: 45-4450-2828
Fax: 45-4485-2829

France - Paris
Tel: 33-1-69-53-63-20
Fax: 33-1-69-30-90-79

Germany - Dusseldorf
Tel: 49-2129-3766400

Germany - Karlsruhe
Tel: 49-721-625370

Germany - Munich
Tel: 49-89-627-144-0
Fax: 49-89-627-144-44

Italy - Milan
Tel: 39-0331-742611
Fax: 39-0331-466781

Italy - Venice
Tel: 39-049-7625286

Netherlands - Drunen
Tel: 31-416-690399
Fax: 31-416-690340

Poland - Warsaw
Tel: 48-22-3325737

Spain - Madrid
Tel: 34-91-708-08-90
Fax: 34-91-708-08-91

Sweden - Stockholm
Tel: 46-8-5090-4654

UK - Wokingham
Tel: 44-118-921-5800
Fax: 44-118-921-5820

07/14/15

© 2015-2016 Microchip Technology Inc.