IRU1030-33

3A LOW DROPOUT POSITIVE FIXED 3.3V REGULATOR

FEATURES

- Guaranteed < 1.3V Dropout at Full Load Current
- Fast Transient Response
- 1% Voltage Reference Initial Accuracy
- Output Current Limiting
- Built-In Thermal Shutdown

APPLICATIONS

- Standard 3.3V Chip Set and Logic Applications

DESCRIPTION

The IRU1030-33 is a low dropout three-terminal fixed 3.3V output regulator with minimum of 3A output current capability. This product is specifically designed to provide well regulated supply for low voltage IC applications requiring 3.3V output. The IRU1030-33 is guaranteed to have <1.3V dropout at full load current making it ideal to provide well regulated output with supply voltage as low as 4.6V input.

TYPICAL APPLICATION

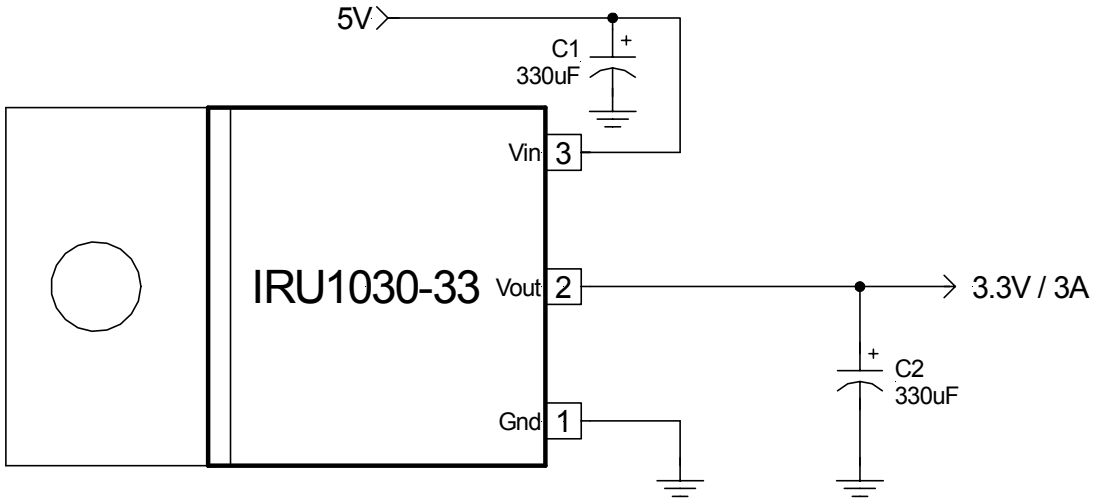

Figure 1 - Typical application of IRU1030-33

TYPICAL APPLICATION

Tj (°C)	3-PIN PLASTIC TO-220 (T)	3-PIN PLASTIC TO-263 (M)	2-PIN PLASTIC Ultra Thin-Pak (P)	2-PIN PLASTIC TO-252 (D-Pak)
0 To 150	IRU1030-33CT	IRU1030-33CM	IRU1030-33CP	IRU1030-33CD

ABSOLUTE MAXIMUM RATINGS

Input Voltage (Vin) 7V
Power Dissipation ..... Internally Limited
Storage Temperature Range ..... -65°C To 150°C
Operating Junction Temperature Range ..... 0°C To 150°C

PACKAGE INFORMATION

3-PIN PLASTIC TO-220 (T)	3-PIN PLASTIC TO-263 (M)	2-PIN PLASTIC ULTRA THIN-PAK (P)	2-PIN PLASTIC TO-252 (D-Pak)
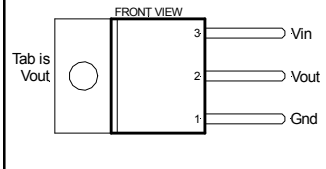	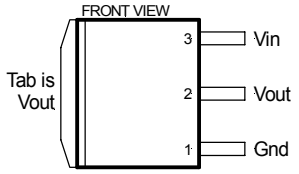	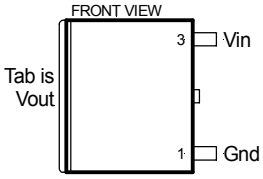	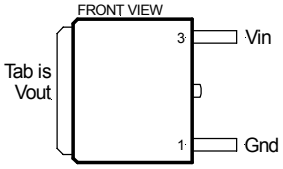
θ_{JT}=2.7°C/W θ_{JA}=60°C/W	θ_{JA}=35°C/W for 1" Square pad	θ_{JA}=70°C/W for 1" Square pad	θ_{JA}=70°C/W for 0.5" Sq pad

ELECTRICAL SPECIFICATIONS

Unless otherwise specified, these specifications apply over Cin=1μF, Cout=10μF, and Tj=0 to 150°C. Typical values refer to Tj=25°C.

PARAMETER	SYM	TEST CONDITION	MIN	TYP	MAX	UNITS
Output Voltage	Vo	Io=10mA,Tj=25°C,Vin=5V	3.267	3.300	3.333	V
		Io=10mA, Vin=5V	3.234	3.300	3.366	
Line Regulation		Io=10mA, 4.7V<Vin<7V			0.2	%
Load Regulation (Note 1)		Vin=5V, Vadj=0, 10mA<Io<3A			0.4	%
Dropout Voltage (Note 2)	ΔVo	Note 2, Io=3A		1.1	1.3	V
Current Limit		Vin=5V, dVo=100mV	3.1			A
Minimum Load Current (Note 3)		Vin=5V		5	10	mA
Thermal Regulation		30ms Pulse, Vin-Vo=3V, Io=3A		0.01	0.02	%/W
Ripple Rejection		f=120Hz, Co=25μF Tantalum, Io=1.5A, Vin-Vo=3V	60	70		dB
Adjust Pin Current Change		Io=10mA, Vin-Vo=1.5V, Tj=25°C		0.2	5	μA
Temperature Stability		Vin=5V, Vadj=0V,Io=10mA		0.5		%
Long Term Stability		Tj=125°C, 1000Hrs		0.3	1	%
RMS Output Noise		Tj=25°C, 10Hz<f<10KHz		0.003		%Vo

Note 1: Low duty cycle pulse testing with Kelvin connections is required in order to maintain accurate data.

Note 2: Dropout voltage is defined as the minimum differential voltage between Vin and Vout required to maintain regulation at Vout. It is measured when the output voltage drops 1% below its nominal value.

Note 3: Minimum load current is defined as the minimum current required at the output in order for the output voltage to maintain regulation. Typically the resistor dividers are selected such that it automatically maintains this current.

PIN DESCRIPTIONS

PIN #	PIN SYMBOL	PIN DESCRIPTION
1	Gnd	This pin must be connected to ground plane using a low inductance short connection.
2	Vout	The output of the regulator. A minimum of 10μF capacitor must be connected from this pin to ground to insure stability.
3	Vin	The input pin of the regulator. Typically a large storage capacitor is connected from this pin to ground to insure that the input voltage does not sag below the minimum drop out voltage during the load transient response. This pin must always be 1.3V higher than Vout in order for the device to regulate properly.

BLOCK DIAGRAM

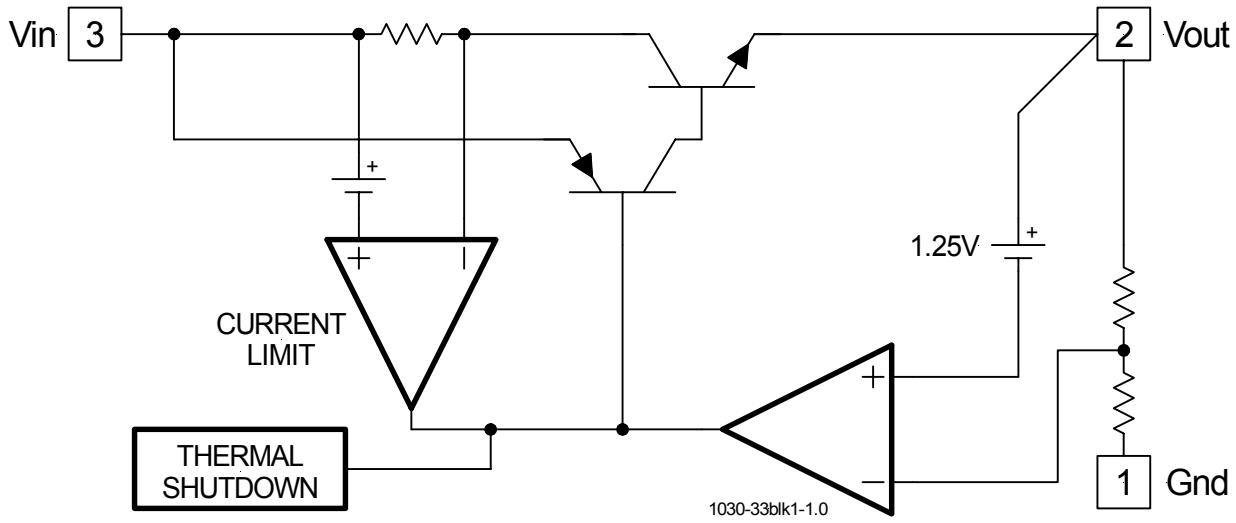

Figure 2 - Simplified block diagram of the IRU1030-33

APPLICATION INFORMATION

Stability

The IRU1030-33 requires the use of an output capacitor as part of the frequency compensation in order to make the regulator stable. Typical designs for microprocessor applications use standard electrolytic capacitors with a typical ESR in the range of 50 to 100mΩ and an output capacitance of 500 to 1000μF. Fortunately as the capacitance increases, the ESR decreases resulting in a fixed RC time constant. The IRU1030-33 takes advantage of this phenomena in making the overall regulator loop stable. For most applications a minimum of 100μF aluminum electrolytic capacitor such as Sanyo MVGX series, Panasonic FA series as well as the Nichicon PL series insures both stability and good transient response.

International
IOR Rectifier

IR WORLD HEADQUARTERS : 233 Kansas St., El Segundo, California 90245, USA Tel: (310) 252-7105
TAC Fax: (310) 252-7903
Visit us at www.irf.com for sales contact information.
Data and specifications subject to change without notice. 02/01