PROTECTED DIGITAL AUDIO AMPLIFIER

Features

- Integrated analog input Class D audio amplifier driver in a small 16 pin package
- Floating inputs enable easy half bridge implementation
- Programmable bidirectional over-current protection with self-reset function
- Programmable preset deadtime for improved THD performances
- Start and stop click noise reduction
- High noise immunity
- ±100 V ratings deliver up to 500 W in output power
- Operates up to 800 kHz
- RoHS compliant

Product Summary

V_{OFFSET} (max)		± 100 V
Gate driver	Io+	1.0 A
	Io-	1.2 A
Selectable Deadtime		25/40/65/105 ns
OC protection delay (max)		500 ns
DC offset		<20 mV
PWM frequency		~800 kHz
Error amplifier open loop gain		>60 dB
THD+N* (1kHz, 50W, 4Ω)		0.01 %
Residual Noise* (AES-17 Filter)		200 µVrms

* Measured with recommended circuit

Typical Applications

- Home theater systems
- Mini component stereo systems
- Powered speaker systems
- General purpose audio power amplifiers

Package Options



SOIC16N



PDIP16

Typical Connection Diagram

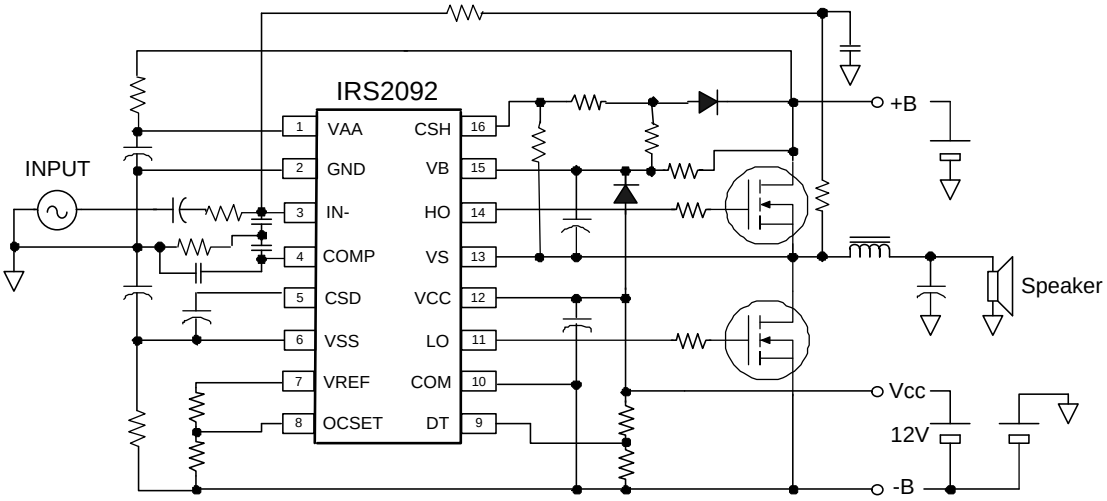

 © 2013 International Rectifier

Table of Contents	Page
Description	3
Simplified Block Diagram	4
Typical Application Diagram	4
Qualification Information	5
Absolute Maximum Ratings	6
Recommended Operating Conditions	7
Electrical Characteristics	8
Waveform Definitions	11
Functional Block Diagram	12
Input/Output Pin Equivalent Circuit Diagram	13
Lead Definitions	14
Lead Assignments	14
Package Details	15
Tape and Reel Details	16
Part Marking Information	17
Ordering Information	17

 © 2013 International Rectifier

Description

The IRS2092 is a high voltage, high performance Class D audio amplifier driver with PWM modulator and protection. In conjunction with two external MOSFET and a few external components, a complete Class D audio amplifier with protection can be realized.

International Rectifier's proprietary noise isolation technology allows high current gate drive stage and high speed low noise error amplifier reside on a single small silicon die.

Open elements of PWM modulator section allow flexible PWM topology implementation

 © 2013 International Rectifier

Simplified Block Diagram

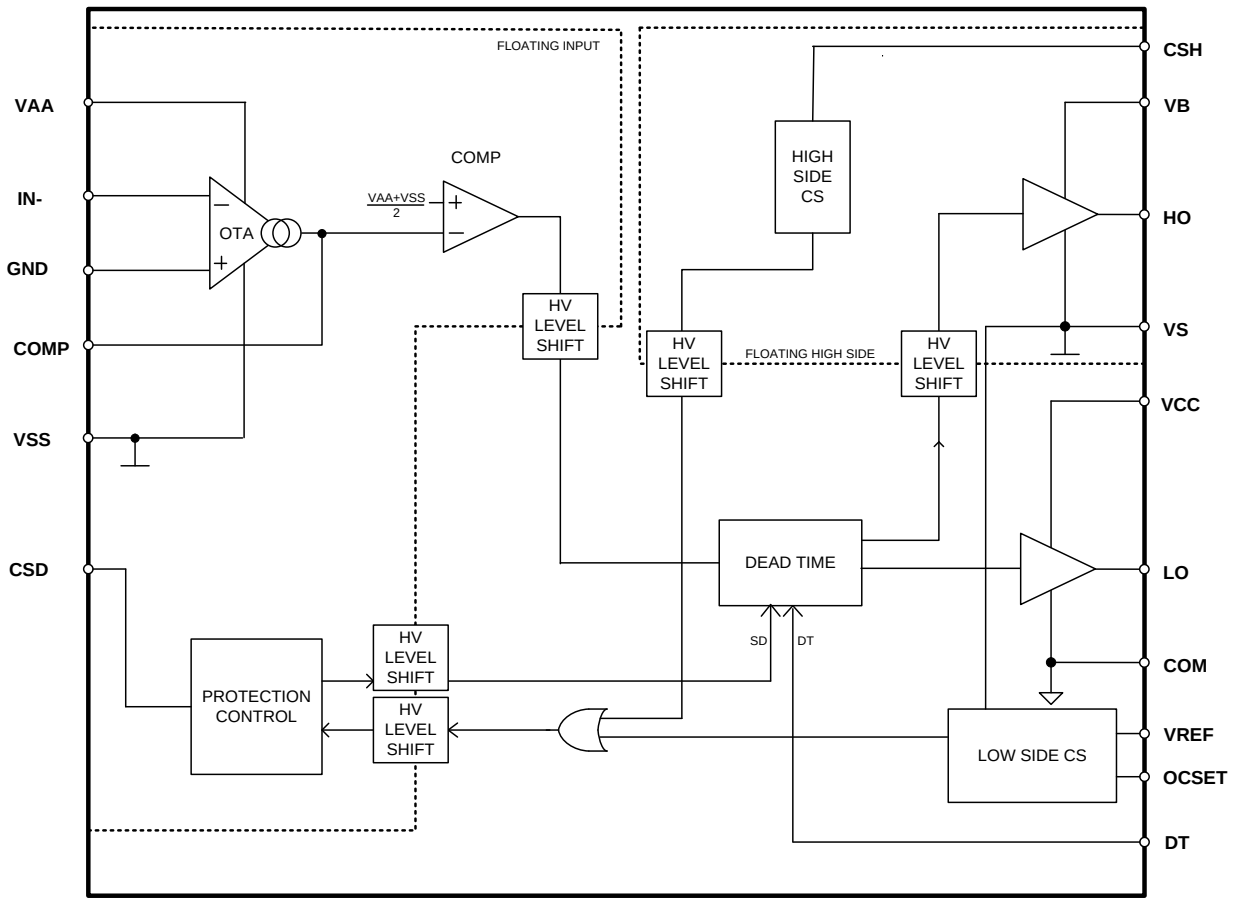

Typical Application Diagram

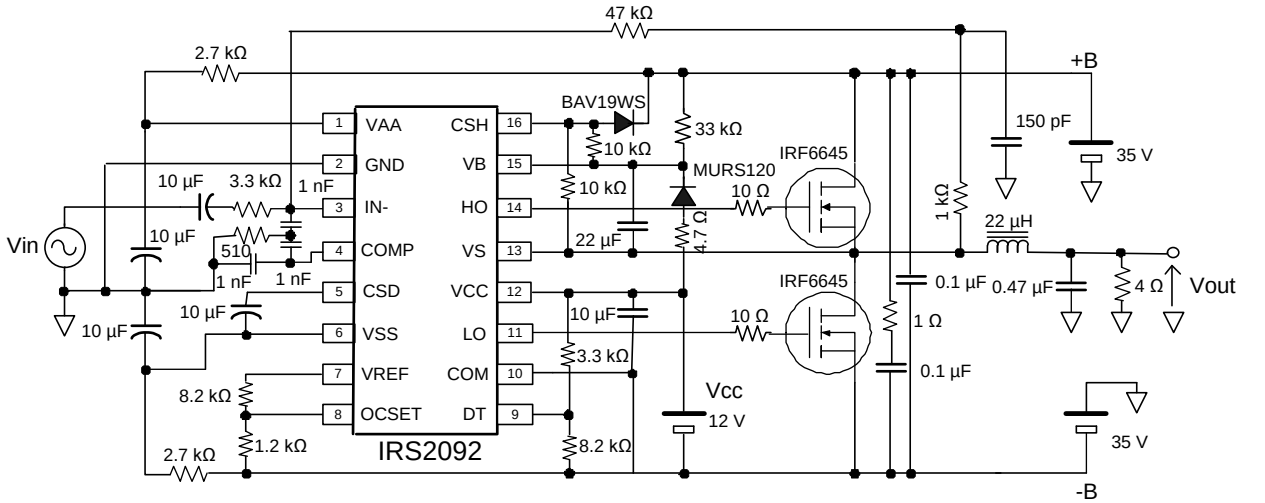

 © 2013 International Rectifier

Qualification Information

Qualification Level		Industrial†† (per JEDEC JESD 47E)	
		Comments: This IC has passed JEDEC's Industrial qualification. IR's Consumer qualification level is granted by extension of the higher Industrial level.	
Moisture Sensitivity Level		SOIC16N	MSL2††† (per IPC/JEDEC J-STD-020C)
		DIP16	Not applicable
ESD	**Machine Model**	Class B (per JEDEC standard JESD22-A114D)	
	Human Body Model	Class 2 (per EIA/JEDEC standard EIA/JESD22-A115-A)	
	Charged Device Model	Class IV (per JEDEC standard JESD22-C101C)	
IC Latch-Up Test		Class I, Level A (per JESD78A)	
RoHS Compliant		Yes	

† Qualification standards can be found at International Rectifier's web site http://www.irf.com/

†† Higher qualification ratings may be available should the user have such requirements. Please contact your International Rectifier sales representative for further information.

††† Higher MSL ratings may be available for the specific package types listed here. Please contact your International Rectifier sales representative for further information.

 © 2013 International Rectifier

Absolute Maximum Ratings

Absolute Maximum Ratings indicate sustained limits beyond which damage to the device may occur. All voltage parameters are absolute voltages referenced to COM; all currents are defined positive into any lead. The Thermal Resistance and Power Dissipation ratings are measured under board mounted and still air conditions

Symbol	Definition		Min	Max	Units
V_B	High side floating supply voltage		-0.3	220	V
V_S	High side floating supply voltage ††		V_B -20	V_B +0.3	
V_{HO}	High side floating output voltage		V_S -0.3	V_B +0.3	
V_{CSH}	CSH pin input voltage		V_S -0.3	V_B +0.3	
V_{CC}	Low side fixed supply voltage ††		-0.3	20	
V_{LO}	Low side output voltage		-0.3	Vcc+0.3	
V_{AA}	Floating input positive supply voltage ††		(See I_{AAZ})	210	
V_{SS}	Floating input negative supply voltage ††		-1 (See I_{SSZ})	GND +0.3	
V_{GND}	Floating input supply ground voltage		V_{SS} -0.3 (See I_{SSZ})	V_{AA} +0.3 (See I_{AAZ})	
I_{IN-}	Inverting input current †		---	±3	mA
V_{CSD}	SD pin input voltage		V_{SS} -0.3	V_{AA} +0.3	V
V_{COMP}	COMP pin input voltage		V_{SS} -0.3	V_{AA} +0.3	
V_{DT}	DT pin input voltage		-0.3	V_{CC} +0.3	
V_{OCSET}	OCSET pin input voltage		-0.3	V_{CC}+0.3	
I_{AAZ}	Floating input positive supply zener clamp current ††		---	20	mA
I_{SSZ}	Floating input negative supply zener clamp current ††		---	20	
I_{CCZ}	Low side supply zener clamp current †††		---	10	
I_{BSZ}	Floating supply zener clamp current †††		---	10	
I_{OREF}	Reference output current		---	5	
dV_S/dt	Allowable Vs voltage slew rate		---	50	V/ns
dV_{SS}/dt	Allowable Vss voltage slew rate †††		---	50	V/ms
Pd	Maximum power dissipation @ $T_A \leq +25°C$	SOIC16N	---	1.0	W
		DIP16	---	1.6	
Rth_{JA}	Thermal resistance, Junction to ambient	SOIC16N	---	115	°C/W
		DIP16	---	75	
T_J	Junction Temperature		---	150	°C
T_S	Storage Temperature		-55	150	°C
T_L	Lead temperature (soldering, 10 seconds)		---	300	°C

† IN- contains clamping diode to GND.

†† V_{DD} – IN+, GND -V_{SS}, V_{CC}-COM and V_B-V_S contain internal shunt zener diodes. Please note that the voltage ratings of these can be limited by the clamping current.

††† For the rising and falling edges of step signal of 10 V. V_{SS}=15 V to 200 V.

 © 2013 International Rectifier

Recommended Operating Conditions

For proper operation, the device should be used within the recommended conditions below. The Vs and COM offset ratings are tested with supplies biased at V_{AA}-V_{SS}=10 V, V_{CC}=12 V and V_B-V_S=12 V. All voltage parameters are absolute voltages referenced to COM; all currents are defined positive into any lead.

Symbol	Definition	Min.	Max.	Units
V_B	High side floating supply absolute voltage	V_S +10	V_S +18	V
V_S	High side floating supply offset voltage	†	200	
I_{AAZ}	Floating input positive supply zener clamp current	1	11	mA
I_{SSZ}	Floating input negative supply zener clamp current	1	11	
V_{SS}	Floating input supply absolute voltage	0	200	V
V_{HO}	High side floating output voltage	Vs	V_B	
V_{CC}	Low side fixed supply voltage	10	18	
V_{LO}	Low side output voltage	0	V_{CC}	
V_{GND}	GND pin input voltage	V_{SS} †††	V_{AA} †††	
V_{IN-}	Inverting input voltage	V_{GND} -0.5	V_{GND} +0.5	
V_{CSD}	CSD pin input voltage	V_{SS}	V_{AA}	
V_{COMP}	COMP pin input voltage	V_{SS}	V_{AA}	
C_{COMP}	COMP pin phase compensation capacitor to GND	1	-	nF
V_{DT}	DT pin input voltage	0	V_{CC}	V
I_{OREF}	Reference output current to COM ††	0.3	0.8	mA
V_{OCSET}	OCSET pin input voltage	0.5	5	V
V_{CSH}	CSH pin input voltage	Vs	V_B	
dVss/dt	Allowable Vss voltage slew rate upon power-up ††††	-	50	V/ms
I_{PW}	Input pulse width	10 †††††	-	ns
f_{SW}	Switching Frequency	-	800	kHz
T_A	Ambient Temperature	-40	125	°C

† Logic operational for Vs equal to –5 V to +200 V. Logic state held for Vs equal to –5 V to –V_{BS}.

†† Nominal voltage for V_{REF} is 5.1 V. I_{OREF} of 0.3 – 0.8 mA dictates total external resistor value on VREF to be 6.3 kΩ to 16.7 kΩ.

††† GND input voltage is limited by I_{AAZ} and I_{SSZ}.

†††† V_{SS} ramps up from 0 V to 200 V.

††††† Output logic status may not respond correctly if input pulse width is smaller than the minimum pulse width.

 © 2013 International Rectifier

Electrical Characteristics

V_{CC},V_{BS}= 12 V, V_{SS}=V_S=COM=0 V, V_{AA}=10 V, C_L=1 nF and T_A=25 °C unless otherwise specified.

Symbol	Definition	Min	Typ	Max	Units	Test Conditions
Low Side Supply						
UV_{CC+}	Vcc supply UVLO positive threshold	8.4	8.9	9.4	V	
UV_{CC-}	Vcc supply UVLO negative threshold	8.2	8.7	9.2		
UV_{CCHYS}	UV_{CC} hysteresis	-	0.2	-		
I_{QCC}	Low side quiescent current	-	-	3	mA	V_{DT}=V_{CC}
V_{CLAMPL}	Low side zener diode clamp voltage	19.6	20.4	21.6	V	I_{CC}=5 mA
High Side Floating Supply						
UV_{BS+}	High side well UVLO positive threshold	8.0	8.5	9.0	V	
UV_{BS-}	High side well UVLO negative threshold	7.8	8.3	8.8		
UV_{BSHYS}	UV_{BS} hysteresis	-	0.2	-		
I_{QBS}	High side quiescent current	-	-	1	mA	
I_{LKH}	High to Low side leakage current	-	-	50	µA	V_B=V_S =200 V
V_{CLAMPH}	High side zener diode clamp voltage	19.6	20.4	21.6	V	I_{BS}=5 mA
Floating Input Supply						
UV_{AA+}	VA+, VA- floating supply UVLO positive threshold from V_{SS}	8.2	8.7	9.2	V	V_{SS} =0 V, GND pin floating
UV_{AA-}	VA+, VA- floating supply UVLO negative threshold from V_{SS}	7.7	8.2	8.7		V_{SS} =0 V, GND pin floating
UV_{AAHYS}	UV_{AA} hysteresis	-	0.5	-		V_{SS} =0 V, GND pin floating
I_{QAA0}	Floating Input positive quiescent supply current	-	0.5	2	mA	V_{AA}=10 V, V_{SS} =0 V, V_{CSD} =VSS
I_{QAA1}	Floating Input positive quiescent supply current	-	8	11		V_{AA}=10 V, V_{SS} =0 V, V_{CSD} =VAA
I_{QAA2}	Floating Input positive quiescent supply current	-	8	11		V_{AA}=10 V, V_{SS} =0 V, V_{CSD} =GND
I_{LKM}	Floating input side to Low side leakage current	-	-	50	µA	V_{AA}=V_{SS}=V_{GND}= 100 V
$V_{CLAMPM+}$	V_{AA} floating supply zener diode clamp voltage, positive, with respect to GND	6.0	7.0	8.0	V	I_{AA}=5 mA, I_{SS}=5 mA, V_{GND}=0 V, V_{CSD} =VSS
$V_{CLAMPM-}$	V_{SS} floating supply zener diode clamp voltage, negative, with respect to GND	-8.0	-7.0	-6.0		I_{AA}=5 mA, I_{SS}=5 mA, V_{GND}=0 V, V_{CSD} =VSS

 © 2013 International Rectifier

Electrical Characteristics (cont'd)

V_{CC},V_{BS}= 12 V, V_{SS}=V_S=COM=0 V, V_{AA}=10 V, C_L=1 nF and T_A=25 °C unless otherwise specified.

Audio Input (V_{GND}=0, V_{AA}=5V, V_{SS}=-5V)						
V_{OS}	Input offset voltage	-15	0	15	mV	
I_{BIN}	Input bias current	-	-	40	nA	
BW	Small signal bandwidth	-	9	-	MHz	C_{COMP}=2 nF, Rf=3.3 kΩ
V_{COMP}	OTA Output voltage	VAA-1	-	VSS+1	V	
g_m	OTA transconductance	-	100	-	mS	V_{IN-}=10 mV
G_V	OTA gain	60	-	-	dB	
V_{Nrms}	OTA input noise voltage	-	250	-	mVrms	BW=20 kHz, Resolution BW=22 Hz Fig.5
SR	Slew rate	-	±5	-	V/us	C_{COMP}=1 nF
CMRR	Common-mode rejection ratio	-	60	-	dB	
PSRR	Supply voltage rejection ratio	-	65	-		
PWM comparator						
Vth_{PWM}	PWM comparator threshold in COMP	-	(V_{AA}-V_{SS})/2	-	V	
f_{OTA}	COMP pin star-up local oscillation frequency	0.7	1.0	1.5	MHz	V_{CSD} =GND
Protection						
V_{REF}	Reference output voltage	4.8	5.1	5.4	V	I_{OREF} =0.5 mA
Vth_{OCL}	Low side OC threshold in Vs	1.1	1.2	1.3		OCSET=1.2 V, Fig.6
Vth_{OCH}	High side OC threshold in V_{CSH}	1.1+ Vs	1.2+ Vs	1.3+ Vs		Vs=200 V,
Vth1	CSD pin shutdown release threshold	0.62xV_{AA}	0.70xV_{AA}	0.78xV_{AA}		
Vth2	CSD pin self reset threshold	0.26xV_{AA}	0.30xV_{AA}	0.34xV_{AA}		
I_{CSD+}	CSD pin discharge current	70	100	130	µA	V_{CSD} = V_{SS} +5 V
I_{CSD-}	CSD pin charge current	70	100	130		V_{CSD} = V_{SS} +5 V
t_{SD}	Shutdown propagation delay from V_{CSD} > V_{SS} + Vth_{OCH} to Shutdown	-	-	250	ns	
t_{OCH}	Propagation delay time from V_{CSH} > Vth_{OCH} to Shutdown	-	-	500		Fig.3
t_{OCL}	Propagation delay time from Vs> Vth_{OCL} to Shutdown	-	-	500		Fig.4

 © 2013 International Rectifier

Electrical Characteristics (cont'd)

V_{CC},V_{BS}= 12 V, V_{SS}=V_S=COM=0 V, V_{AA}=10 V, C_L=1 nF and T_A=25 °C unless otherwise specified.

Gate Driver						
Io+	Output high short circuit current (Source)	-	1.0	-	A	Vo=0 V, PW≤10 µs
Io-	Output low short circuit current (Sink)	-	1.2	-	A	Vo=12 V, PW≤10 µs
V_{OL}	Low level out put voltage LO – COM, HO - VS	-	-	0.1	V	Io=0 A
V_{OH}	High level out put voltage VCC – LO, VB - HO	-	-	1.4		
ton	High and low side turn-on propagation delay	-	360	-	ns	V_{DT} = V_{CC}
toff	High and low side turn-off propagation delay	-	335	-		V_{DT} = V_{CC}
tr	Turn-on rise time	-	20	50		
tf	Turn-off fall time	-	15	35		
DT1	Deadtime: LO turn-off to HO turn-on (DT_{LO-HO}) & HO turn-off to LO turn-on (DT_{HO-LO})	15	25	35		V_{DT}>$V_{DT1,}$
DT2	Deadtime: LO turn-off to HO turn-on (DT_{LO-HO}) & HO turn-off to LO turn-on (DT_{HO-LO})	25	40	55		V_{DT1}>V_{DT}> $V_{DT2,}$
DT3	Deadtime: LO turn-off to HO turn-on (DT_{LO-HO}) & HO turn-off to LO turn-on (DT_{HO-LO})	50	65	85		V_{DT2}>V_{DT}> $V_{DT3,}$
DT4	Deadtime: LO turn-off to HO turn-on (DT_{LO-HO}) & HO turn-off to LO turn-on (DT_{HO-LO})V_{DT}= V_{DT4}	85	105	135		V_{DT3}>V_{DT}> $V_{DT4,}$
V_{DT1}	DT mode select threshold 2	0.51xVcc	0.57xVcc	0.63xVcc	V	
V_{DT2}	DT mode select threshold 3	0.32xVcc	0.36xVcc	0.40xVcc		
V_{DT3}	DT mode select threshold 4	0.21xVcc	0.23xVcc	0.25xVcc		

 © 2013 International Rectifier

Waveform Definitions

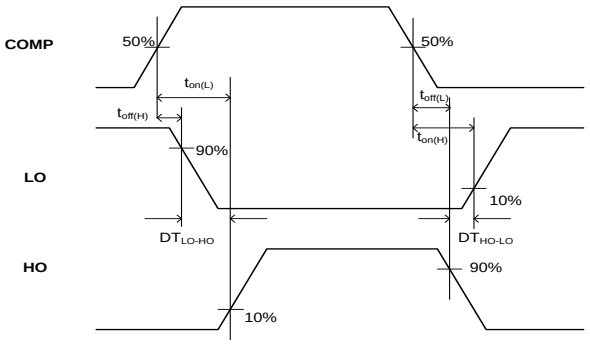

Figure 1: Switching Time Waveform Definitions

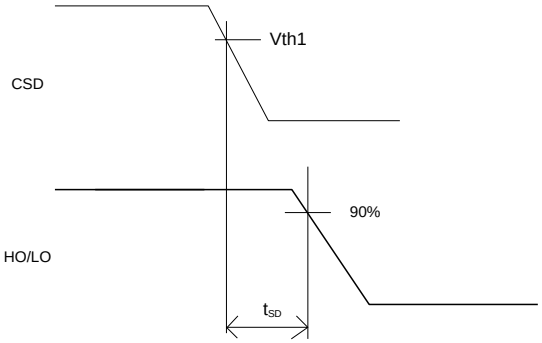

Figure 2: CSD to Shutdown Waveform Definitions

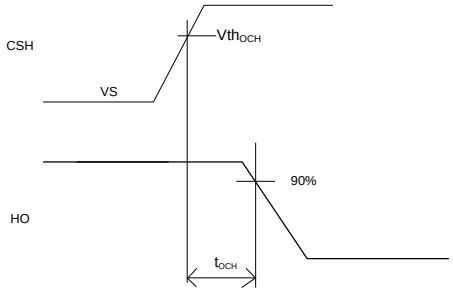

Figure 3: V_S > Vth_{OCL} to Shutdown Waveform

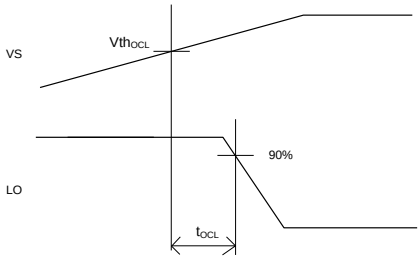

Figure 4: V_{CSH} > Vth_{OCH} to Shutdown Waveform

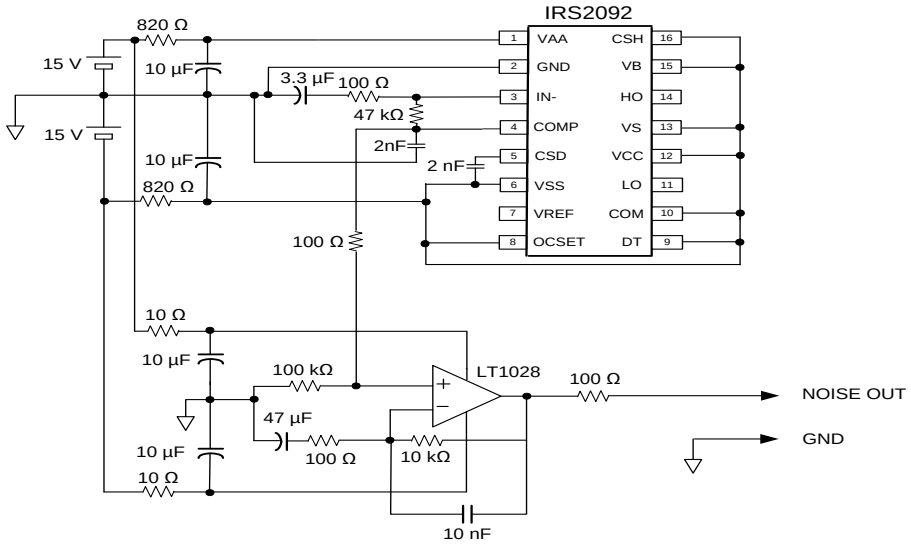

Figure 5: OTA input noise voltage mesurent circuit

 © 2013 International Rectifier

Functional Block Diagram: IRS2092

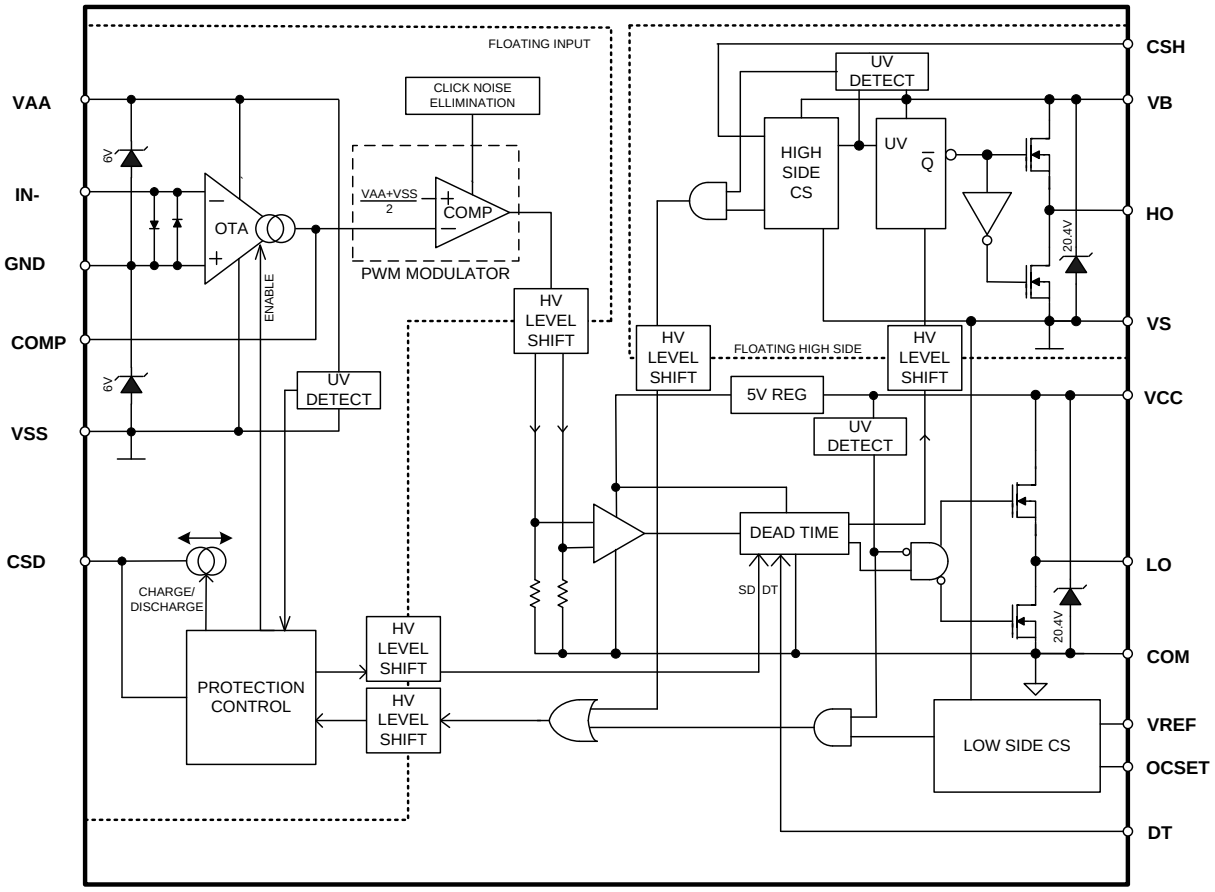

 © 2013 International Rectifier

Input/Output Pin Equivalent Circuit Diagrams: IRS2092

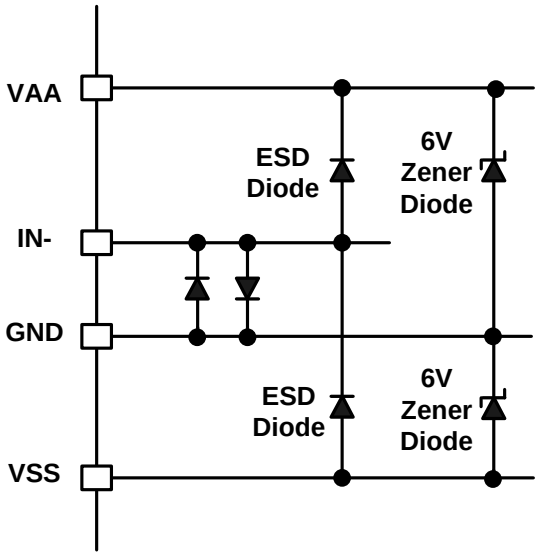

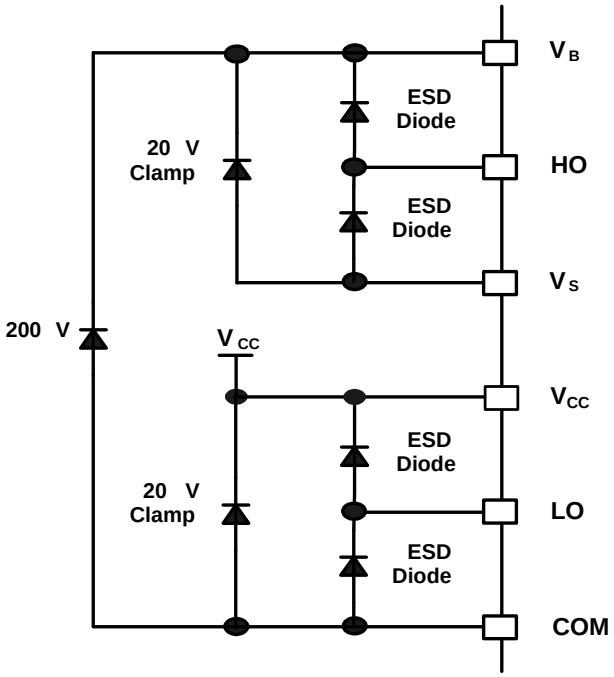

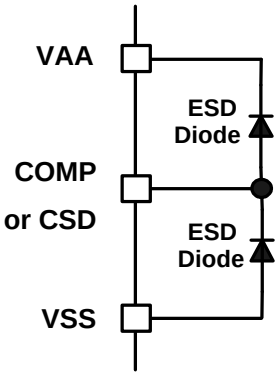

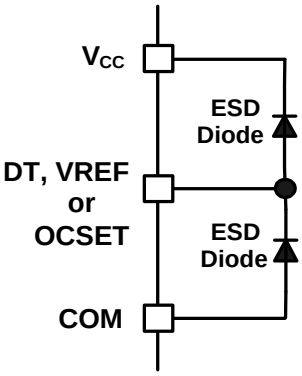

 © 2013 International Rectifier

Lead Definitions: IRS2092

Pin #	Symbol	Description
1	VAA	Floating input positive supply
2	GND	Floating input supply return
3	IN-	Analog inverting input
4	COMP	Phase compensation input, comparator input
5	CSD	Shutdown timing capacitor
6	VSS	Floating input negative supply
7	VREF	5V reference voltage to program OCSET pin
8	OCSET	Low side over current threshold setting
9	DT	Deadtime program input
10	COM	Low side supply return
11	LO	Low side output
12	VCC	Low side supply
13	VS	High side floating supply return
14	HO	High side output
15	VB	High side floating supply
16	CSH	High side over current sensing input

Lead Assignments

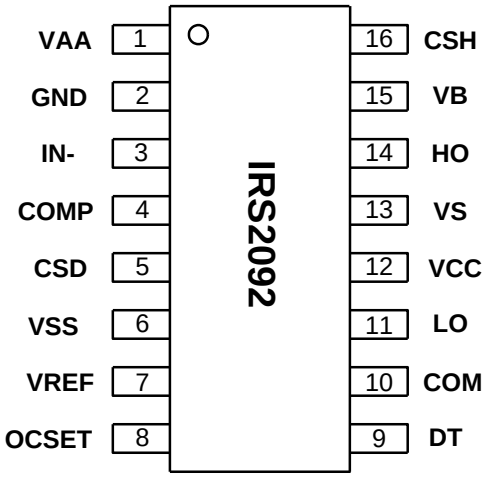

PDIP16 and SOIC16N

 © 2013 International Rectifier

Package Details: PDIP16

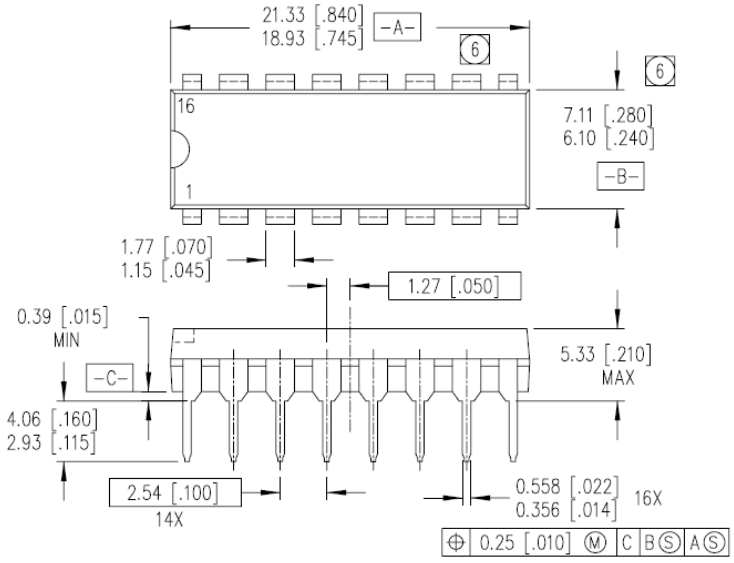

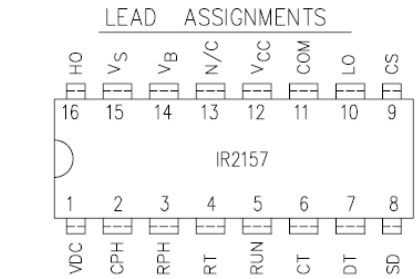

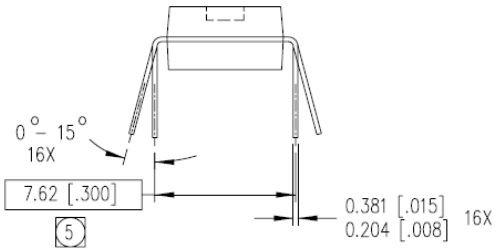

NOTES:

1. DIMENSIONING & TOLERANCING PER ANSI Y14.5M-1982.
2. CONTROLLING DIMENSION: INCH.
3. DIMENSIONS ARE SHOWN IN MILLIMETERS [INCHES].
4. OUTLINE CONFORMS TO JEDEC OUTLINE MS-001AA.

(5) MEASURED WITH THE LEADS CONSTRAINED TO BE PERPENDICULAR TO DATUM PLANE C.

(6) DIMENSION DOES NOT INCLUDE MOLD PROTUSIONS. MOLD PROTUSIONS SHALL NOT EXCEED 0.25 [.010].

Package Details: SOIC16N

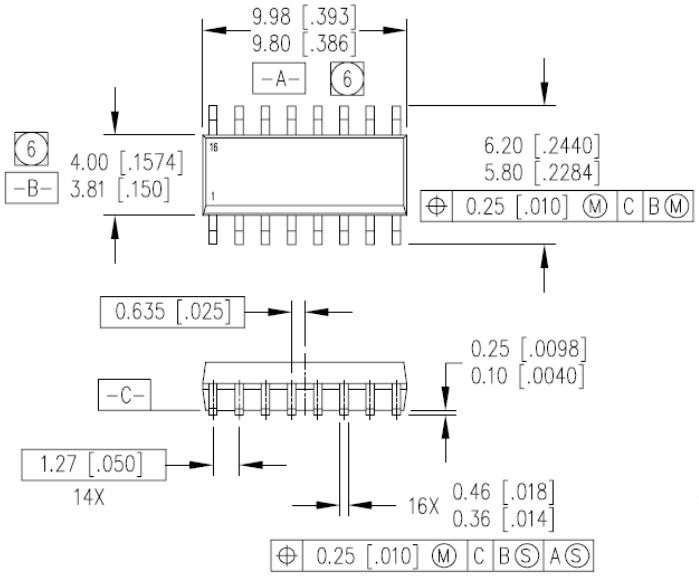

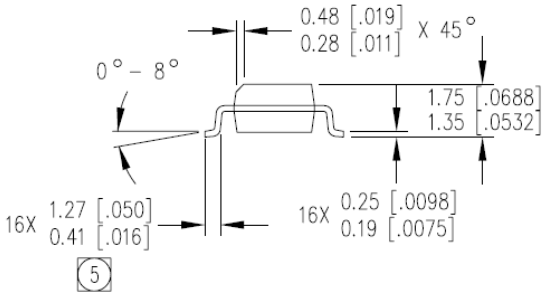

NOTES:

1. DIMENSIONING & TOLERANCING PER ANSI Y14.5M-1982.
2. CONTROLLING DIMENSION: MILLIMETER
3. DIMENSIONS ARE SHOWN IN MILLIMETERS [INCHES].
4. OUTLINE CONFORMS TO JEDEC OUTLINE MS-012AC.

(5) DIMENSION IS THE LENGTH OF LEAD FOR SOLDERING TO A SUBSTRATE.

(6) DIMENSION DOES NOT INCLUDE MOLD PROTUSIONS. MOLD PROTUSIONS SHALL NOT EXCEED 0.15 [.006].

 © 2013 International Rectifier

Tape and Reel Details: SOIC16N

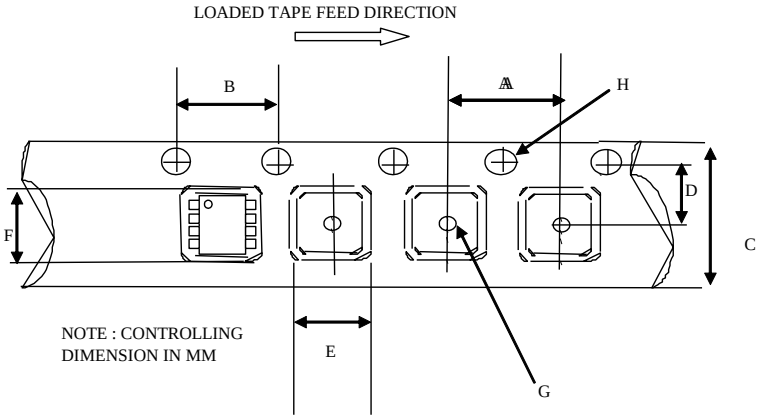

CARRIER TAPE DIMENSION FOR 16SOICN

	Metric		Imperial	
Code	Min	Max	Min	Max
A	7.90	8.10	0.311	0.318
B	3.90	4.10	0.153	0.161
C	15.70	16.30	0.618	0.641
D	7.40	7.60	0.291	0.299
E	6.40	6.60	0.252	0.260
F	10.20	10.40	0.402	0.409
G	1.50	n/a	0.059	n/a
H	1.50	1.60	0.059	0.062

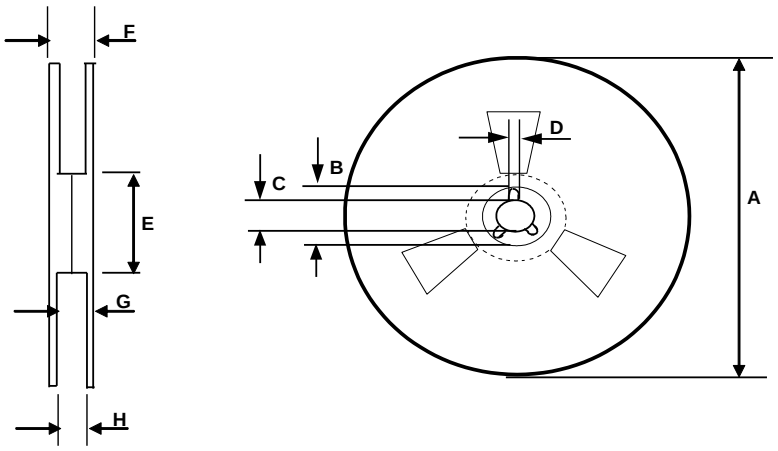

REEL DIMENSIONS FOR 16SOICN

	Metric		Imperial	
Code	Min	Max	Min	Max
A	329.60	330.25	12.976	13.001
B	20.95	21.45	0.824	0.844
C	12.80	13.20	0.503	0.519
D	1.95	2.45	0.767	0.096
E	98.00	102.00	3.858	4.015
F	n/a	22.40	n/a	0.881
G	18.50	21.10	0.728	0.830
H	16.40	18.40	0.645	0.724

 © 2013 International Rectifier

Part Marking Information

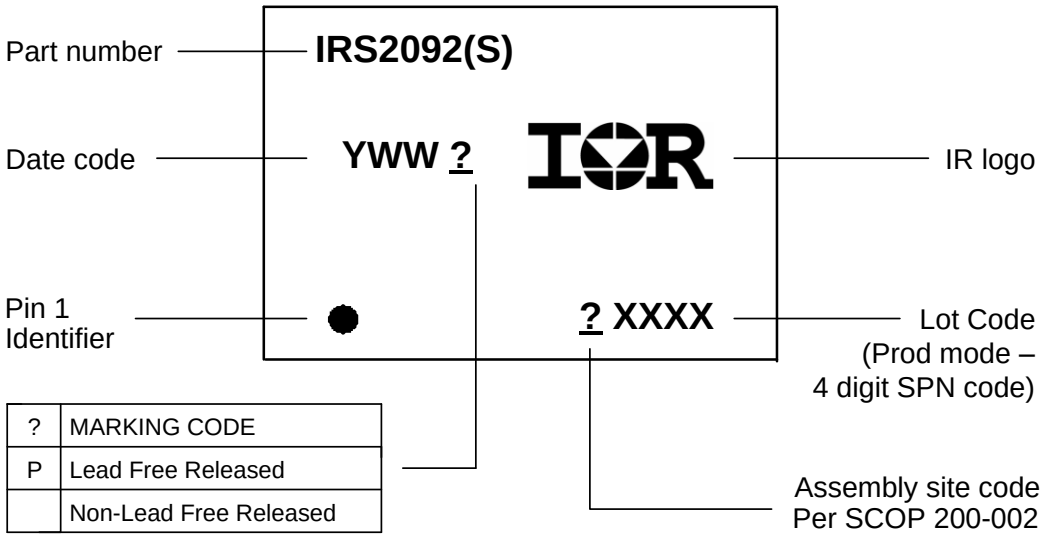

Ordering Information

Base Part Number	Package Type	Standard Pack		Complete Part Number
		Form	Quantity	
IRS2092	PDIP16	Tube/Bulk	25	IRS2092PBF
	SOIC16N	Tube/Bulk	45	IRS2092SPBF
		Tape and Reel	2500	IRS2092STRPBF

The information provided in this document is believed to be accurate and reliable. However, International Rectifier assumes no responsibility for the consequences of the use of this information. International Rectifier assumes no responsibility for any infringement of patents or of other rights of third parties which may result from the use of this information. No license is granted by implication or otherwise under any patent or patent rights of International Rectifier. The specifications mentioned in this document are subject to change without notice. This document supersedes and replaces all information previously supplied.

For technical support, please contact IR's Technical Assistance Center
http://www.irf.com/technical-info/

WORLD HEADQUARTERS:
233 Kansas St., El Segundo, California 90245
Tel: (310) 252-7105

 © 2013 International Rectifier