PD - 95779A

International
IOR Rectifier

IRLR8113PbF
IRLU8113PbF

HEXFET® Power MOSFET

V_{DSS}	$R_{DS(on)}$ max	Qg
30V	6.0mΩ	22nC

Applications

- High Frequency Synchronous Buck Converters for Computer Processor Power
- High Frequency Isolated DC-DC Converters with Synchronous Rectification for Telecom and Industrial Use
- Lead-Free

Benefits

- Very Low R_{DS}(on) at 4.5V V_{GS}
- Ultra-Low Gate Impedance
- Fully Characterized Avalanche Voltage and Current




D-Pak IRLR8113 | I-Pak IRLU8113

Absolute Maximum Ratings

	Parameter	Max.	Units
V_{DS}	Drain-to-Source Voltage	30	V
V_{GS}	Gate-to-Source Voltage	± 20	
I_D @ T_C = 25°C	Continuous Drain Current, V_{GS} @ 10V	94④	A
I_D @ T_C = 100°C	Continuous Drain Current, V_{GS} @ 10V	67④	
I_{DM}	Pulsed Drain Current ①	380	
P_D @T_C = 25°C	Maximum Power Dissipation	89	W
P_D @T_C = 100°C	Maximum Power Dissipation	44	
	Linear Derating Factor	0.59	W/°C
T_J T_{STG}	Operating Junction and Storage Temperature Range	-55 to + 175	°C
	Soldering Temperature, for 10 seconds	300 (1.6mm from case)	
	Mounting torque, 6-32 or M3 screw	10 lbf·in (1.1 N·m)	

Thermal Resistance

	Parameter	Typ.	Max.	Units
$R_{\theta JC}$	Junction-to-Case	—	1.69	°C/W
$R_{\theta JA}$	Junction-to-Ambient (PCB Mount) ⑤	—	50	
$R_{\theta JA}$	Junction-to-Ambient	—	110	

Notes ① through ⑤ are on page 11

Static @ T_J = 25°C (unless otherwise specified)

	Parameter	Min.	Typ.	Max.	Units	Conditions
BV_{DSS}	Drain-to-Source Breakdown Voltage	30	—	—	V	V_{GS} = 0V, I_D = 250µA
$\Delta BV_{DSS}/\Delta T_J$	Breakdown Voltage Temp. Coefficient	—	21	—	mV/°C	Reference to 25°C, I_D = 1mA
$R_{DS(on)}$	Static Drain-to-Source On-Resistance	—	4.8	6.0	mΩ	V_{GS} = 10V, I_D = 15A ③
		—	5.8	7.4		V_{GS} = 4.5V, I_D = 12A ③
$V_{GS(th)}$	Gate Threshold Voltage	1.35	—	2.25	V	V_{DS} = V_{GS}, I_D = 250µA
$\Delta V_{GS(th)}/\Delta T_J$	Gate Threshold Voltage Coefficient	—	-5.6	—	mV/°C	
I_{DSS}	Drain-to-Source Leakage Current	—	—	1.0	µA	V_{DS} = 24V, V_{GS} = 0V
		—	—	150		V_{DS} = 24V, V_{GS} = 0V, T_J = 175°C
I_{GSS}	Gate-to-Source Forward Leakage	—	—	100	nA	V_{GS} = 20V
	Gate-to-Source Reverse Leakage	—	—	-100		V_{GS} = -20V
gfs	Forward Transconductance	74	—	—	S	V_{DS} = 15V, I_D = 12A
Q_g	Total Gate Charge	—	22	32		
Q_{gs1}	Pre-Vth Gate-to-Source Charge	—	6.1	—		V_{DS} = 15V
Q_{gs2}	Post-Vth Gate-to-Source Charge	—	1.7	—	nC	V_{GS} = 4.5V
Q_{gd}	Gate-to-Drain Charge	—	6.8	—		I_D = 12A
Q_{godr}	Gate Charge Overdrive	—	7.4	—		See Fig. 16
Q_{sw}	Switch Charge (Q_{gs2} + Q_{gd})	—	8.5	—		
Q_{oss}	Output Charge	—	14	—	nC	V_{DS} = 16V, V_{GS} = 0V
$t_{d(on)}$	Turn-On Delay Time	—	9.2	—		V_{DD} = 15V, V_{GS} = 4.5V ③
t_r	Rise Time	—	3.8	—		I_D = 12A
$t_{d(off)}$	Turn-Off Delay Time	—	15	—	ns	Clamped Inductive Load
t_f	Fall Time	—	10	—		
C_{iss}	Input Capacitance	—	2920	—		V_{GS} = 0V
C_{oss}	Output Capacitance	—	610	—	pF	V_{DS} = 15V
C_{rss}	Reverse Transfer Capacitance	—	260	—		f = 1.0MHz

Avalanche Characteristics

	Parameter	Typ.	Max.	Units
E_{AS}	Single Pulse Avalanche Energy②	—	145	mJ
I_{AR}	Avalanche Current ①	—	13	A
E_{AR}	Repetitive Avalanche Energy ①	—	8.9	mJ

Diode Characteristics

	Parameter	Min.	Typ.	Max.	Units	Conditions
I_S	Continuous Source Current (Body Diode)	—	—	94④	A	MOSFET symbol showing the integral reverse p-n junction diode.
I_{SM}	Pulsed Source Current (Body Diode) ①	—	—	380		
V_{SD}	Diode Forward Voltage	—	—	1.0	V	T_J = 25°C, I_S = 12A, V_{GS} = 0V ③
t_{rr}	Reverse Recovery Time	—	33	49	ns	T_J = 25°C, I_F = 12A, V_{DD} = 15V
Q_{rr}	Reverse Recovery Charge	—	30	45	nC	di/dt = 100A/µs ③
t_{on}	Forward Turn-On Time	Intrinsic turn-on time is negligible (turn-on is dominated by LS+LD)				

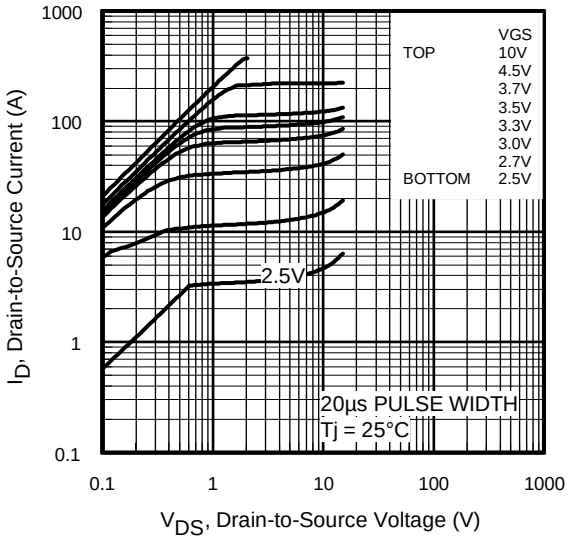

Fig 1. Typical Output Characteristics

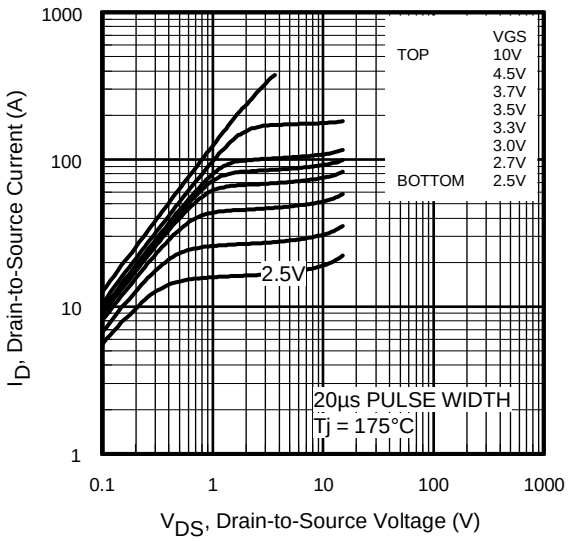

Fig 2. Typical Output Characteristics

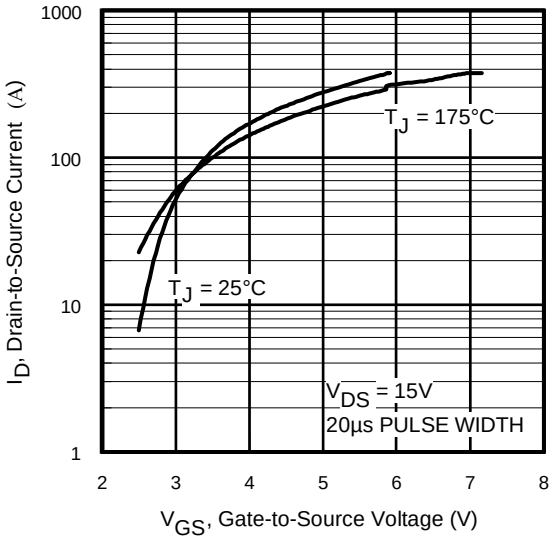

Fig 3. Typical Transfer Characteristics

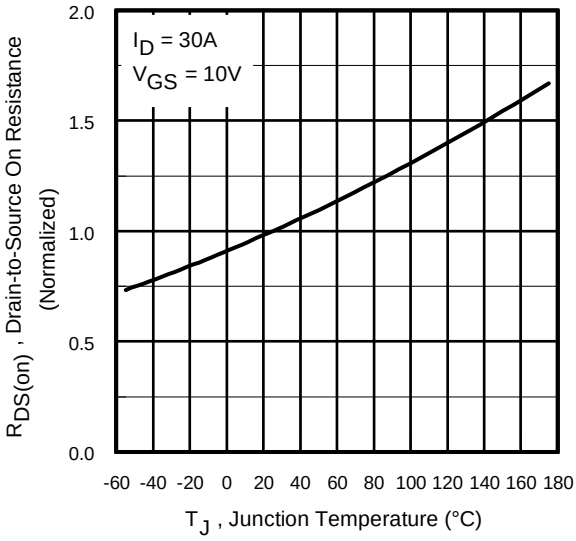

Fig 4. Normalized On-Resistance vs. Temperature

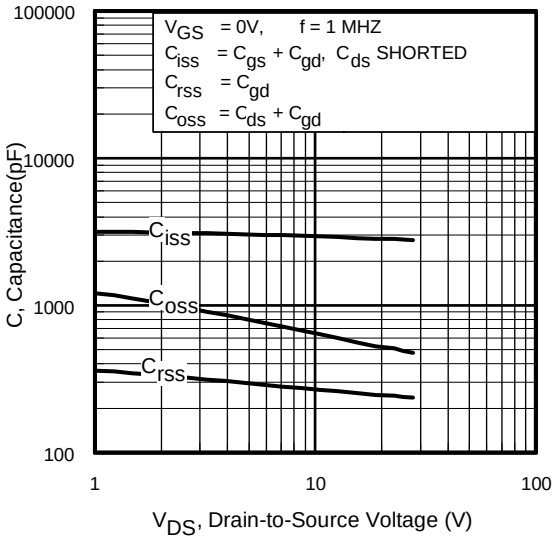

Fig 5. Typical Capacitance vs. Drain-to-Source Voltage

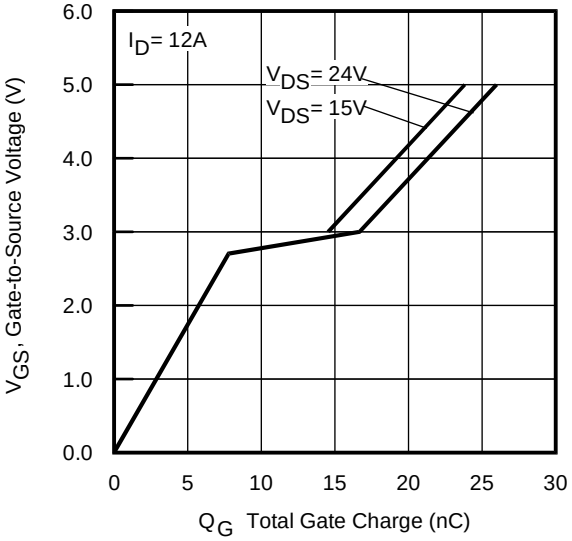

Fig 6. Typical Gate Charge vs. Gate-to-Source Voltage

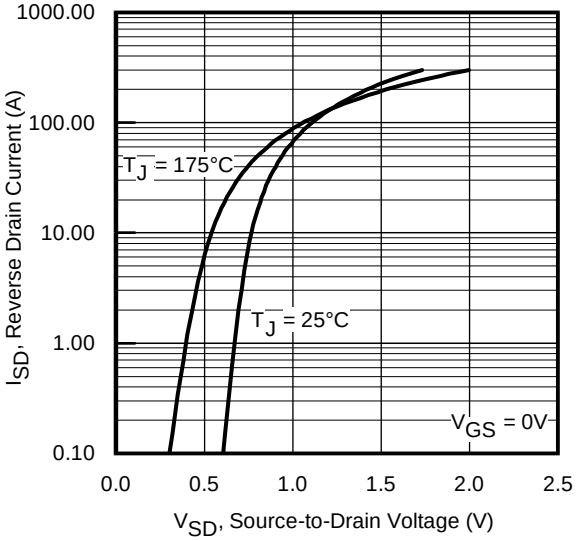

Fig 7. Typical Source-Drain Diode Forward Voltage

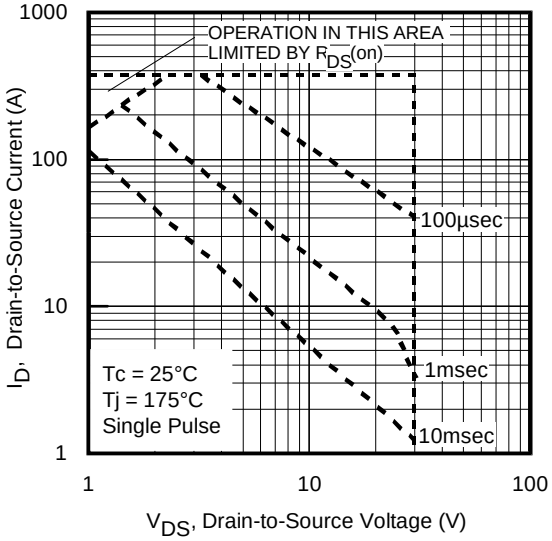

Fig 8. Maximum Safe Operating Area

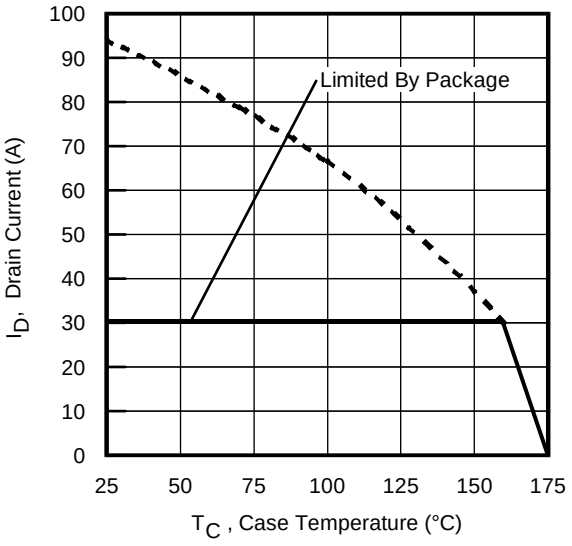

Fig 9. Maximum Drain Current vs. Case Temperature

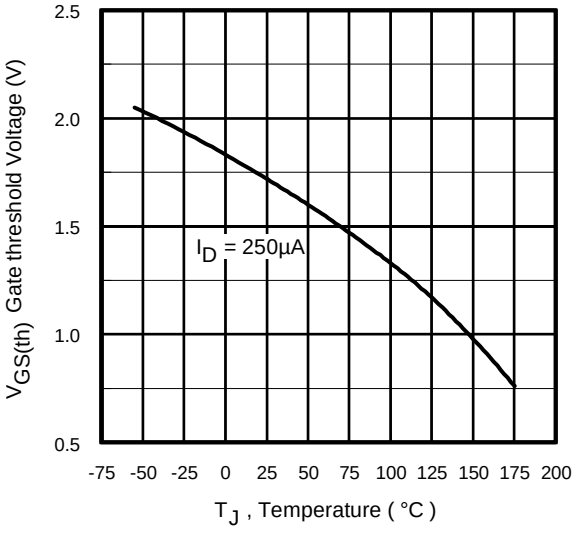

Fig 10. Threshold Voltage vs. Temperature

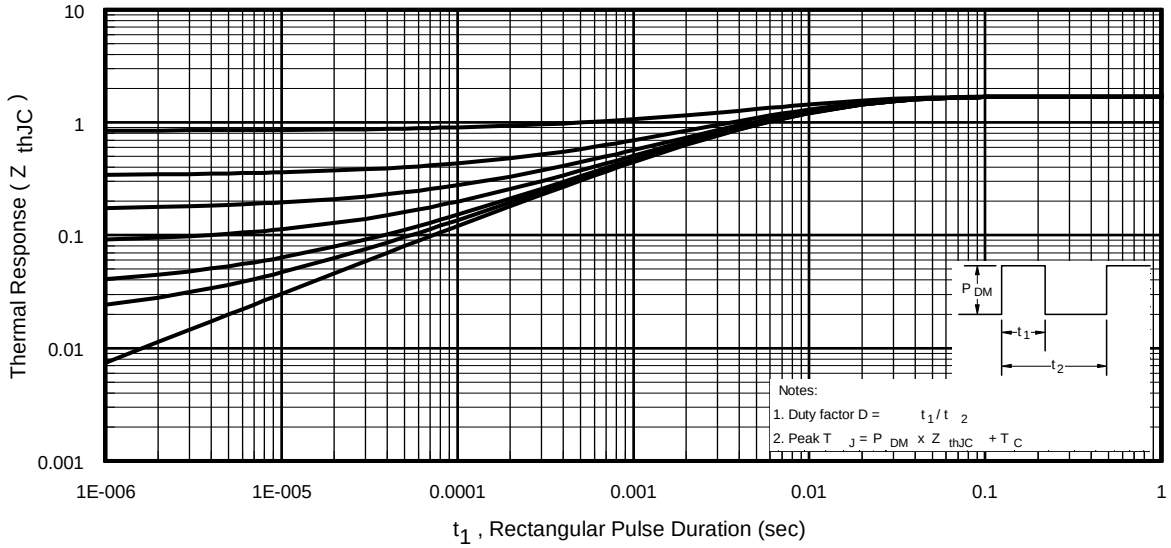

Fig 11. Maximum Effective Transient Thermal Impedance, Junction-to-Case

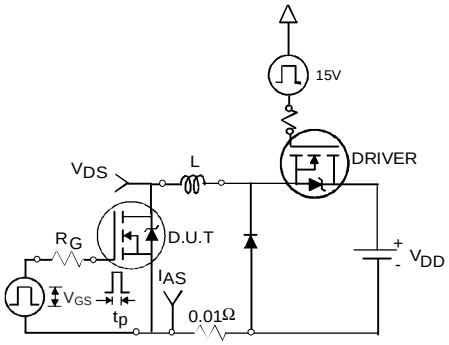

Fig 12a. Unclamped Inductive Test Circuit

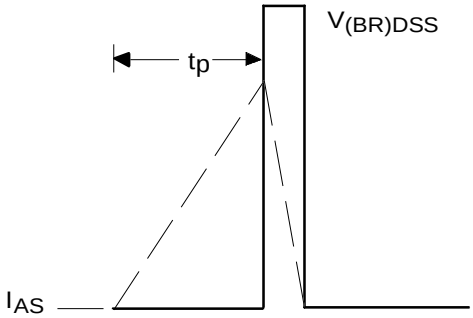

Fig 12b. Unclamped Inductive Waveforms

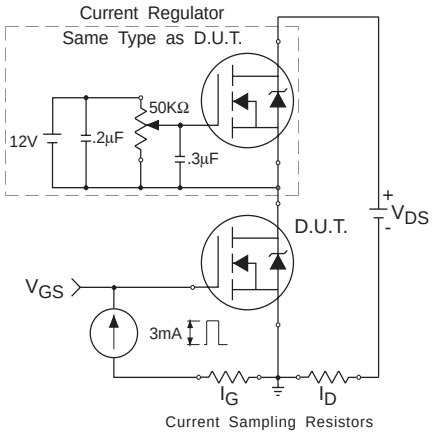

Fig 13. Gate Charge Test Circuit

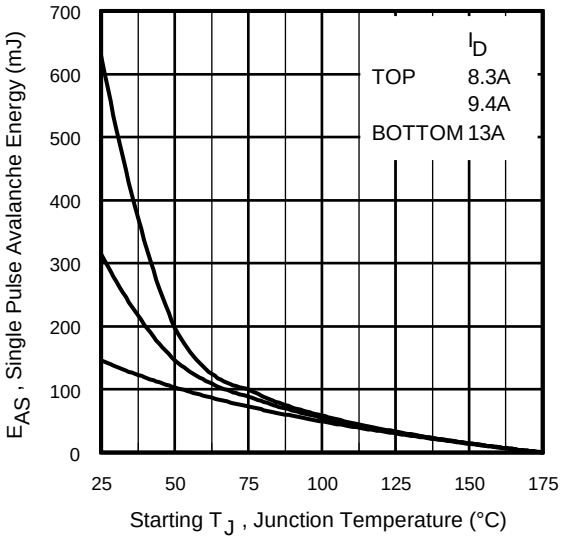

Fig 12c. Maximum Avalanche Energy Vs. Drain Current

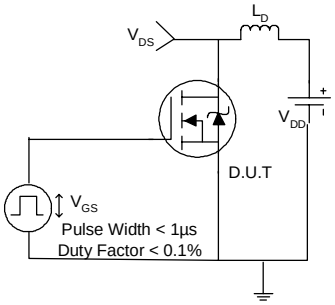

Fig 14a. Switching Time Test Circuit

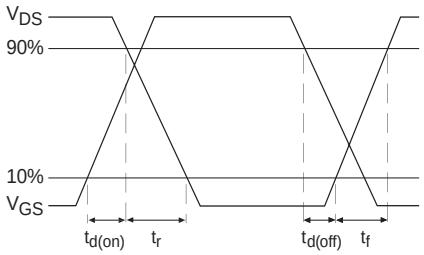

Fig 14b. Switching Time Waveforms

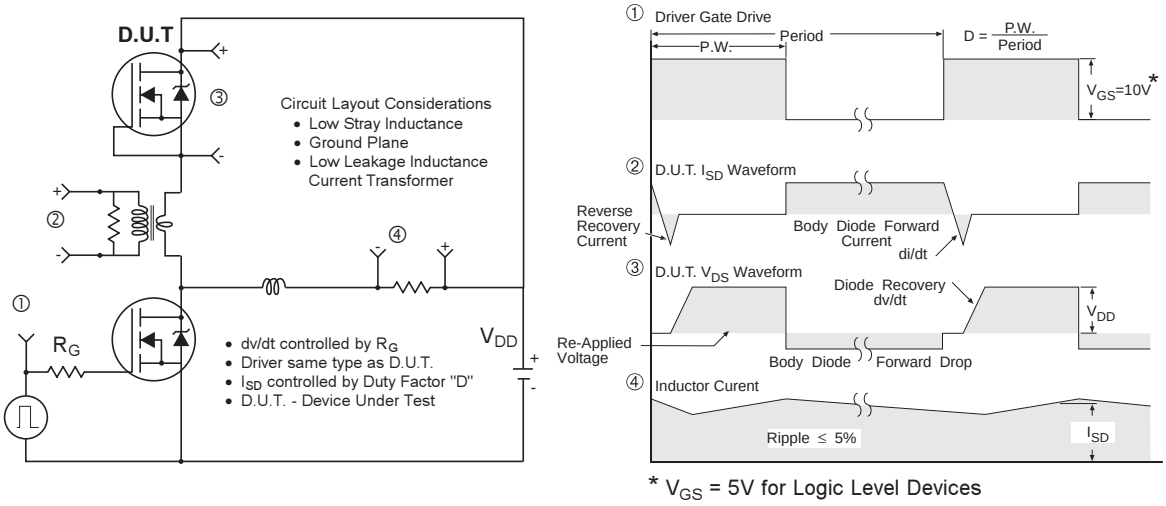

Fig 15. Peak Diode Recovery dv/dt Test Circuit for N-Channel HEXFET® Power MOSFETs

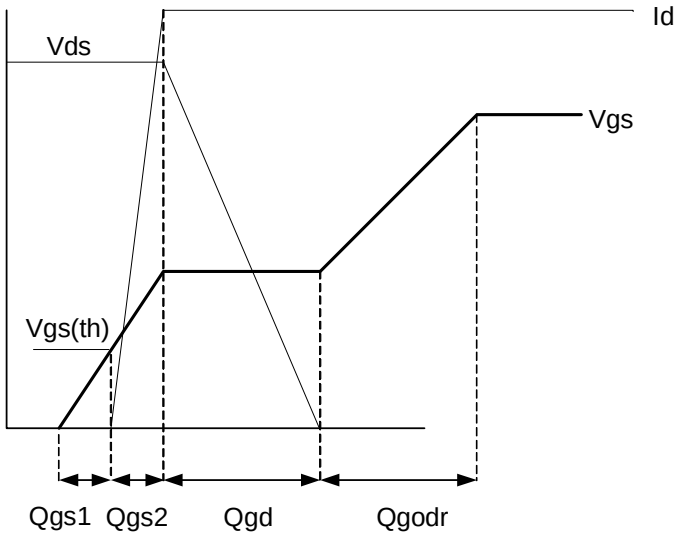

Fig 16. Gate Charge Waveform

Power MOSFET Selection for Non-Isolated DC/DC Converters

Control FET

Special attention has been given to the power losses in the switching elements of the circuit - Q1 and Q2. Power losses in the high side switch Q1, also called the Control FET, are impacted by the $R_{ds(on)}$ of the MOSFET, but these conduction losses are only about one half of the total losses.

Power losses in the control switch Q1 are given by;

$$P_{loss} = P_{conduction} + P_{switching} + P_{drive} + P_{output}$$

This can be expanded and approximated by;

$$P_{loss} = \left(I_{rms}{}^2 \times R_{ds(on)}\right) + \left(I \times \frac{Q_{gd}}{i_g} \times V_{in} \times f\right) + \left(I \times \frac{Q_{gs2}}{i_g} \times V_{in} \times f\right) + \left(Q_g \times V_g \times f\right) + \left(\frac{Q_{oss}}{2} \times V_{in} \times f\right)$$

This simplified loss equation includes the terms Q_{gs2} and Q_{oss} which are new to Power MOSFET data sheets.

Q_{gs2} is a sub element of traditional gate-source charge that is included in all MOSFET data sheets. The importance of splitting this gate-source charge into two sub elements, Q_{gs1} and Q_{gs2}, can be seen from Fig 16.

Q_{gs2} indicates the charge that must be supplied by the gate driver between the time that the threshold voltage has been reached and the time the drain current rises to I_{dmax} at which time the drain voltage begins to change. Minimizing Q_{gs2} is a critical factor in reducing switching losses in Q1.

Q_{oss} is the charge that must be supplied to the output capacitance of the MOSFET during every switching cycle. Figure A shows how Q_{oss} is formed by the parallel combination of the voltage dependant (non-linear) capacitance's C_{ds} and C_{dg} when multiplied by the power supply input buss voltage.

Synchronous FET

The power loss equation for Q2 is approximated by;

$$P_{loss} = P_{conduction} + P_{drive} + P^*_{output}$$

$$P_{loss} = \left(I_{rms}{}^2 \times R_{ds(on)}\right) + \left(Q_g \times V_g \times f\right) + \left(\frac{Q_{oss}}{2} \times V_{in} \times f\right) + \left(Q_{rr} \times V_{in} \times f\right)$$

*dissipated primarily in Q1.

For the synchronous MOSFET Q2, $R_{ds(on)}$ is an important characteristic; however, once again the importance of gate charge must not be overlooked since it impacts three critical areas. Under light load the MOSFET must still be turned on and off by the control IC so the gate drive losses become much more significant. Secondly, the output charge Q_{oss} and reverse recovery charge Q_{rr} both generate losses that are transfered to Q1 and increase the dissipation in that device. Thirdly, gate charge will impact the MOSFETs' susceptibility to Cdv/dt turn on.

The drain of Q2 is connected to the switching node of the converter and therefore sees transitions between ground and V_{in}. As Q1 turns on and off there is a rate of change of drain voltage dV/dt which is capacitively coupled to the gate of Q2 and can induce a voltage spike on the gate that is sufficient to turn the MOSFET on, resulting in shoot-through current . The ratio of Q_{gd}/Q_{gs1} must be minimized to reduce the potential for Cdv/dt turn on.

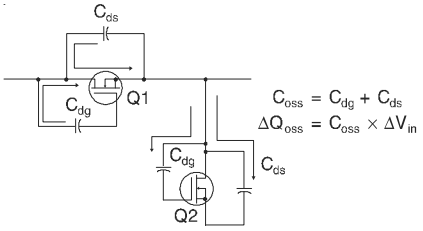

Figure A: Q_{oss} Characteristic

D-Pak (TO-252AA) Package Outline

Dimensions are shown in millimeters (inches)

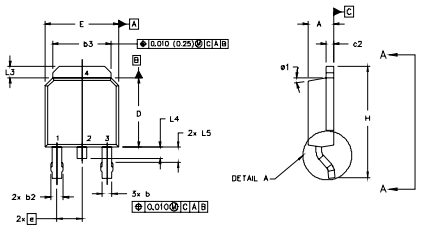

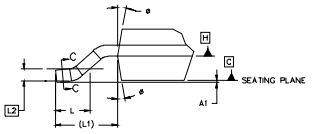

DETAIL "A"
ROTATED 90°

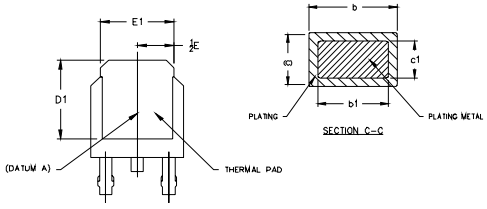

VIEW A–A

SECTION C–C

NOTES:

1.0 DIMENSIONING AND TOLERANCING PER ASME Y14.5 M- 1994.
2.0 DIMENSIONS ARE SHOWN IN INCHES [MILLIMETERS].
3.0 LEAD DIMENSION UNCONTROLLED IN L5
4.0 DIMENSION D1 AND E1 ESTABLISH A MINIMUM MOUNTING SURFACE FOR THERMAL PAD.
5.0 SECTION C-C DIMENSIONS APPLY TO THE FLAT SECTION OF THE LEAD BETWEEN .005 [0.127] AND .010 [0.2540 FROM THE LEAD TIP.
6.0 DIMENSION D & E DO NOT INCLUDE MOLD FLASH. MOLD FLASH SHALL NOT EXCEED .005" (0.127) PER SIDE. THESE DIMENSIONS ARE MEASURED AT THE OUTERMOST EXTREMES OF THE PLASTIC BODY.
7.0 OUTLINE CONFORMS TO JEDEC OUTLINE TO-252AA.

SYMBOL	DIMENSIONS				NOTES
	MILLIMETERS		INCHES		
	MIN.	MAX.	MIN.	MAX.	
A	2.18	2.39	.086	.094	
A1		0.13		.005	
b	0.64	0.89	.025	.035	5
b1	0.64	0.79	.025	0.031	5
b2	0.76	1.14	.030	.045	
b3	4.95	5.46	.195	.215	
c	0.46	0.61	.018	.024	5
c1	0.41	0.56	.016	.022	5
c2	.046	0.89	.018	.035	5
D	5.97	6.22	.235	.245	6
D1	5.21	-	.205	-	4
E	6.35	6.73	.250	.265	6
E1	4.32	-	.170		4
e	2.29		.090 BSC		
H	9.40	10.41	.370	.410	
L	1.40	1.78	.055	.070	
L1	2.74 REF.		.108 REF.		
L2	0.051 BSC		.020 BSC		
L3	0.89	1.27	.035	.050	
L4		1.02		.040	
L5	1.14	1.52	.045	.060	3
ø	0°	10°	0°	10°	
ø1	0°	15°	0°	15°	

LEAD ASSIGNMENTS

HEXFET

1.- GATE
2.- DRAIN
3.- SOURCE
4.- DRAIN

IGBTs, CoPACK

1.- GATE
2.- COLLECTOR
3.- EMITTER
4.- COLLECTOR

D-Pak (TO-252AA) Part Marking Information

EXAMPLE: THIS IS AN IRFR120
WITH ASSEMBLY
LOT CODE 1234
ASSEMBLED ON WW 16, 1999
IN THE ASSEMBLY LINE "A"

Note: "P" in assembly line position indicates "Lead-Free"

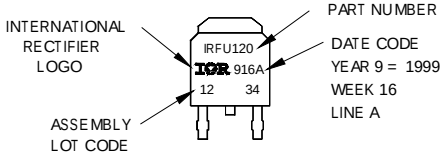

OR

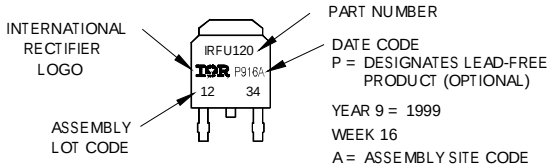

I-Pak (TO-251AA) Package Outline

Dimensions are shown in millimeters (inches)

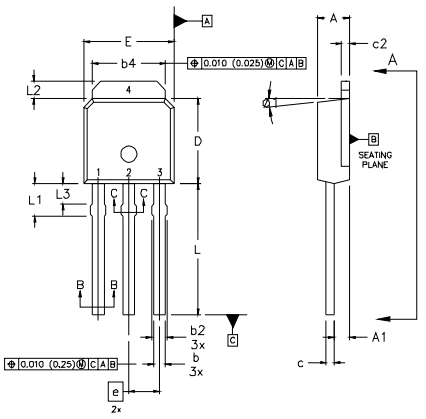

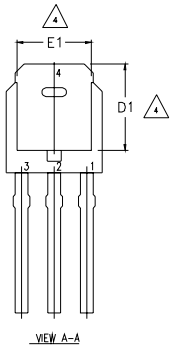

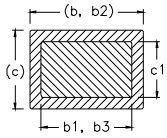

NOTES:

1. DIMENSIONING AND TOLERANCING PER ASME Y14.5 M- 1994.
2. DIMENSIONS ARE SHOWN IN MILLIMETERS [INCHES].
3. DIMENSION D & E DO NOT INCLUDE MOLD FLASH. MOLD FLASH SHALL NOT EXCEED 0.005" (0.127) PER SIDE. THESE DIMENSIONS ARE MEASURED AT THE OUTERMOST EXTREMES OF THE PLASTIC BODY.
4. THERMAL PAD CONTOUR OPTION WITHIN DIMENSION b4, L2, E1 & D1.
5. LEAD DIMENSION UNCONTROLLED IN L3.
6. DIMENSION b1, b3 APPLY TO BASE METAL ONLY.
7. OUTLINE CONFORMS TO JEDEC OUTLINE TO-251AA.
8. CONTROLLING DIMENSION : INCHES.

SYMBOL	DIMENSIONS				NOTES
	MILLIMETERS		INCHES		
	MIN.	MAX.	MIN.	MAX.	
A	2.18	2.39	0.086	.094	
A1	0.89	1.14	0.035	0.045	
b	0.64	0.89	0.025	0.035	
b1	0.64	0.79	0.025	0.031	4
b2	0.76	1.14	0.030	0.045	
b3	0.76	1.04	0.030	0.041	
b4	5.00	5.46	0.195	0.215	4
c	0.46	0.61	0.018	0.024	
c1	0.41	0.56	0.016	0.022	
c2	.046	0.86	0.018	0.035	
D	5.97	6.22	0.235	0.245	3, 4
D1	5.21	-	0.205	-	4
E	6.35	6.73	0.250	0.265	3, 4
E1	4.32	-	0.170	-	4
e	2.29		0.090 BSC		
L	8.89	9.60	0.350	0.380	
L1	1.91	2.29	0.075	0.090	
L2	0.89	1.27	0.035	0.050	4
L3	1.14	1.52	0.045	0.060	5
ø1	0°	15°	0°	15°	

LEAD ASSIGNMENTS

HEXFET

1.- GATE
2.- DRAIN
3.- SOURCE
4.- DRAIN

I-Pak (TO-251AA) Part Marking Information

EXAMPLE: THIS IS AN IRFU120
WITH ASSEMBLY
LOT CODE 5678
ASSEMBLED ON WW 19, 1999
IN THE ASSEMBLY LINE "A"

Note: "P" in assembly line position indicates "Lead-Free"

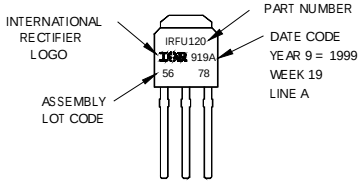

OR

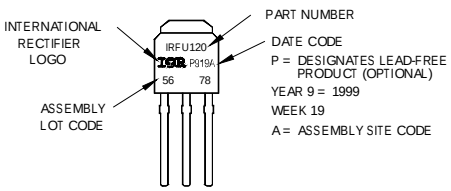

D-Pak (TO-252AA) Tape & Reel Information

Dimensions are shown in millimeters (inches)

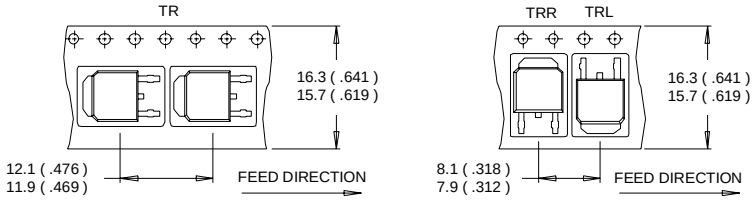

NOTES :
1. CONTROLLING DIMENSION : MILLIMETER.
2. ALL DIMENSIONS ARE SHOWN IN MILLIMETERS (INCHES).
3. OUTLINE CONFORMS TO EIA-481 & EIA-541.

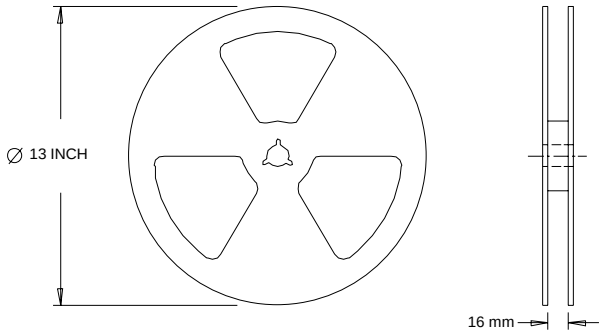

NOTES :
1. OUTLINE CONFORMS TO EIA-481.

Notes:

① Repetitive rating; pulse width limited by max. junction temperature.

② Starting T_J = 25°C, L = 1.8mH, R_G = 25Ω, I_{AS} = 13A.

③ Pulse width ≤ 400µs; duty cycle ≤ 2%.

④ Calculated continuous current based on maximum allowable junction temperature. Package limitation current is 30A.

⑤ When mounted on 1" square PCB (FR-4 or G-10 Material). For recommended footprint and soldering techniques refer to application note #AN-994.

Data and specifications subject to change without notice.
This product has been designed and qualified for the Industrial market.
Qualification Standards can be found on IR's Web site.

International
IOR Rectifier

IR WORLD HEADQUARTERS: 233 Kansas St., El Segundo, California 90245, USA Tel: (310) 252-7105
TAC Fax: (310) 252-7903
Visit us at www.irf.com for sales contact information.12/04