IRIS-A6351

INTEGRATED SWITCHER

Features

• Oscillator is provided on the monolithic control IC with adopting On-Chip-Trimming technology.

• Small temperature characteristics variation by adopting a comparator to compensate for temperature on the control part.

• Low start-up circuit current (50uA max)

• Built-in Active Low-Pass Filter for stabilizing the operation in case of light load

• Avalanche energy guaranteed MOSFET with high VDSS

  • The built-in power MOSFET simplifies the surge absorption circuit since the MOSFET guarantees the avalanche energy.

  • No VDSS de-rating is required.

• Built-in constant voltage drive circuit

• Various kinds of protection functions

  • Pulse-by-pulse Overcurrent Protection (OCP)

  • Overvoltage Protection with latch mode (OVP)

  • Thermal Shutdown with latch mode (TSD)

Package Outline

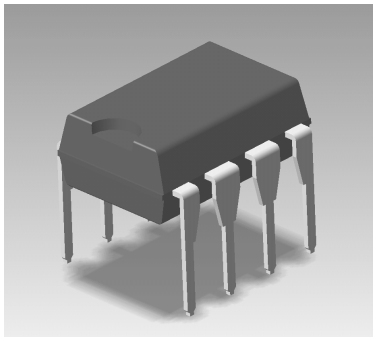

8 Lead PDIP

Key Specifications

Type	MOSFET VDSS(V)	RDS(ON) MAX	ACinput(V)	Pout(W) Note 1
IRIS-A6351	650	3.95Ω	230±15%	10
			85 to 264	8

Note 1: The Pout(W) represents the thermal rating at PRC Operation, and the peak power output is obtained by approximately 120 to 150% of the above listed. When the output voltage is low and ON-duty is narrow, the Pout(W) shall become lower than that of above.

Descriptions

IRIS-A6351 is a hybrid IC consists from power MOSFET and a controller IC, designed for PRC fly-back converter type SMPS (Switching Mode Power Supply) applications, applicable for PRC operation for small power SMPS. This IC realizes downsizing and standardizing of a power supply system reducing external components count and simplifying the circuit designs. (Note). PRC is abbreviation of "Pulse Ratio Control" (On-width control with fixed OFF-time).

Typical Connection Diagram

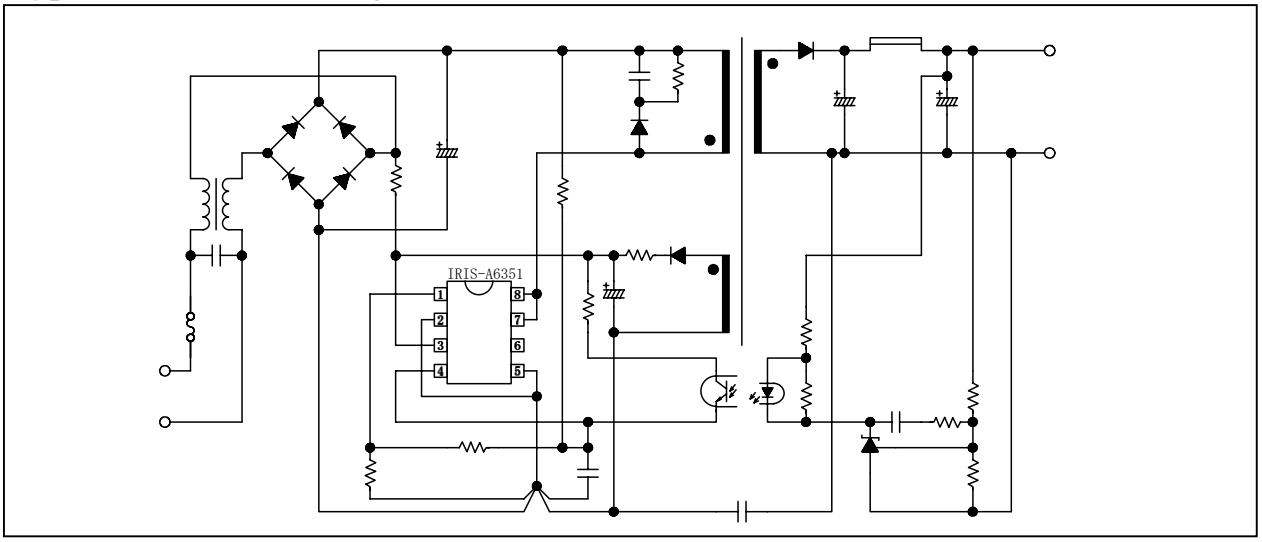

Absolute Maximum Ratings (Ta=25℃) (Refer Gnd 2 and 5)

Absolute maximum ratings indicate sustained limits beyond which damage to the device may occur. All voltage parameters are absolute voltages referenced to terminals stated, all currents are defined positive into any lead. The thermal resistance and power dissipation ratings are measured under board mounted and still air conditions.

Symbol	Definition	Terminals	Max. Ratings	Units	Note
I_{Dpeak}	Drain Current *1	8	2.36	A	Single Pulse
I_{DMAX}	Maximum switching current *5	8	2.36	A	V_{1-2}=0.82V Ta=-20~+125℃
E_{AS}	Single pulse avalanche energy *2	8-1	56	mJ	Single Pulse V_{DD}=99V,L=20mH I_L=2.36A
Vin	Input voltage for control part	3-2	35	V	
Vth	O.C.P/F.B Pin voltage	4-2	6	V	
P_{D1}	Power dissipation for MOSFET *3	8-1	1.35	W	*6
P_{D2}	Power dissipation for control part (Control IC) *4	3-2	0.14	W	Specified by Vin×Iin
T_F	Internal frame temperature in operation	-	-20 ~ +125	℃	Refer to recommended operating temperature
Top	Operating ambient temperature	-	-20 ~ +125	℃	
Tstg	Storage temperature	-	-40 ~ +125	℃	
Tch	Channel temperature	-	150	℃	

*1 Refer to MOS FET A.S.O curve

*2 MOS FET Tch-EAS curve

*3 Refer to MOS FET Ta-PD1 curve

*4 Refer to TF-PD2 curve for Control IC (See page 5)

Fig.1

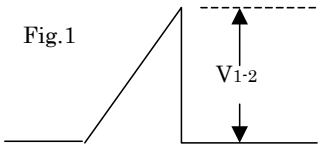

*5 Maximum switching current. The maximum switching current is the Drain current determined by the drive voltage of the IC and threshold voltage (Vth) of MOS FET. Therefore, in the event that voltage drop occurs between Pin 1and Pin 2 due to patterning, the maximum switching current decreases as shown by V_{1-2} in Fig.1 Accordingly please use this device within the decrease value, referring to the derating curve of the maximum switching current.

*6 When embedding this hybrid IC onto the printed circuit board (board size 15mm×15mm)

Electrical Characteristics (for Control IC)

Electrical characteristics for control part (Ta=25℃, Vin=20V,unless otherwise specified)

Symbol	Definition	Ratings			Units	Test Conditions
		MIN	TYP	MAX		
$V_{in(ON)}$	Operation start voltage	15.8	17.6	19.4	V	Vin=0→19.4V
$V_{in(OFF)}$	Operation stop voltage *7	9.1	10.1	11.1	V	Vin=19.4→9.1V
$I_{in(ON)}$	Circuit current in operation	-	-	5	mA	-
$I_{in(OFF)}$	Circuit current in non-operation	-	-	50	μA	Vin=15V
$T_{OFF(MAX)}$	Maximum OFF time	12	15	18	μsec	-
Vth	O.C.P/F.B Pin threshold voltage	0.7	0.76	0.82	V	-
$I_{OCP/FB}$	O.C.P/F.B Pin extraction current	0.7	0.8	0.9	mA	-
$V_{in(OVP)}$	O.V.P operation voltage	23.2	25.5	27.8	V	Vin=0→27.8V
$I_{in(H)}$	Latch circuit sustaining current *8	-	-	70	μA	Vin=27.8→ (Vin(OFF)-0.3)V
$V_{in(La.OFF)}$	Latch circuit release voltage *7,8	7.9	-	10.5	V	Vin=27.8→7.9V
$T_{j(TSD)}$	Thermal shutdown operating temperature	135	-	-	℃	-

*7 The relation of $V_{in(OFF)} > V_{in(La.OFF)}$ is applied for each product.
*8 The latch circuit means a circuit operated O.V.P and T.S.D.

Electrical Characteristics (for MOSFET)

(Ta=25℃) unless otherwise specified

Symbol	Definition	Ratings			Units	Test Conditions
		MIN	TYP	MAX		
V_{DSS}	Drain-to-Source breakdown voltage	650	-	-	V	ID=300μA V_{2-1}=0V(short)
I_{DSS}	Drain leakage current	-	-	300	μA	V_{DS}=650V V_{2-1}=0V(short)
$R_{DS(ON)}$	On-resistance	-	-	3.95	Ω	V_{3-2}=10V I_D=0.4A
tf	Switching time	-	-	250	nsec	-
θ_{ch-F}	Thermal resistance *9	-	-	52	℃/W	Between channel and internal frame

*9 Internal frame temperature (T_F) is measured at the root of the Pin 5.

IRIS-A6351
A.S.O. temperature derating coefficient curve

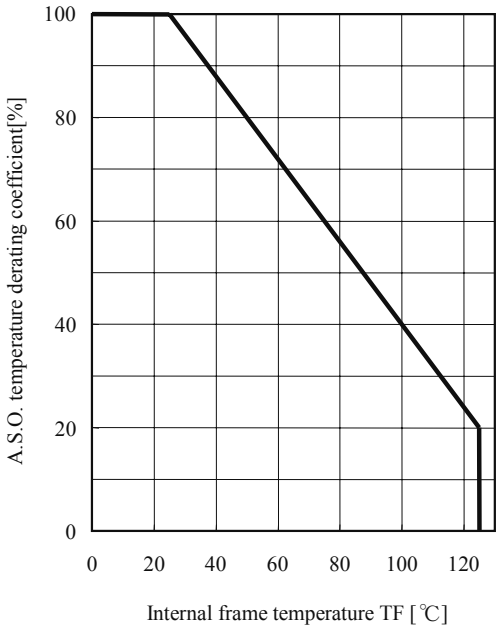

IRIS-A6351
MOSFET A.S.O. Curve
Ta=25ºC
Single Pulse

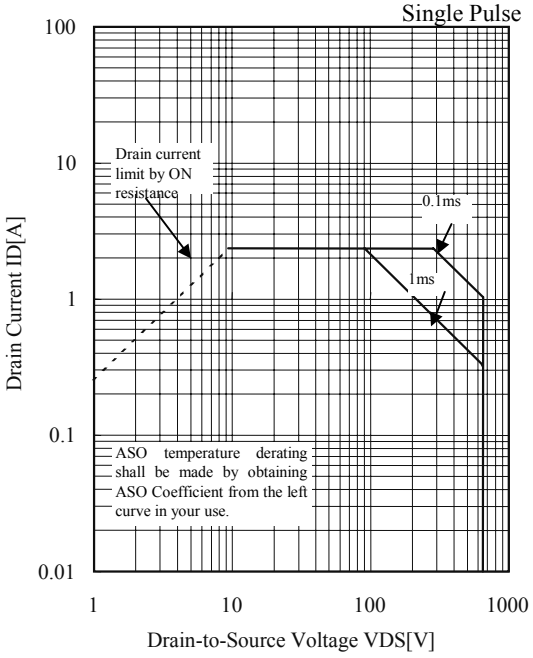

IRIS-A6351
Maximum Switching current derating curve
Ta= -20～+125℃

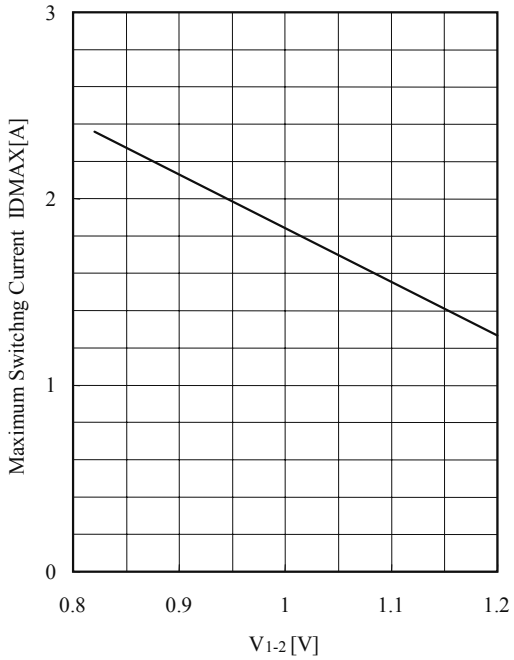

IRIS-A6351
Avalanche energy derating curve

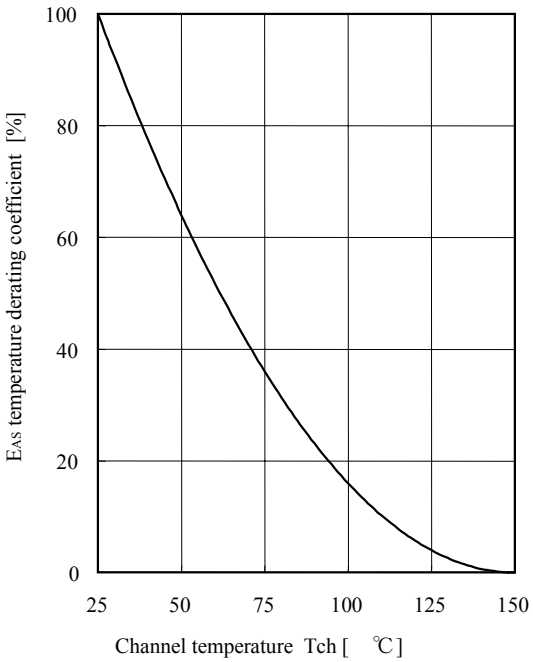

IRIS-A6351
MOSFET Ta-PD1 Curve

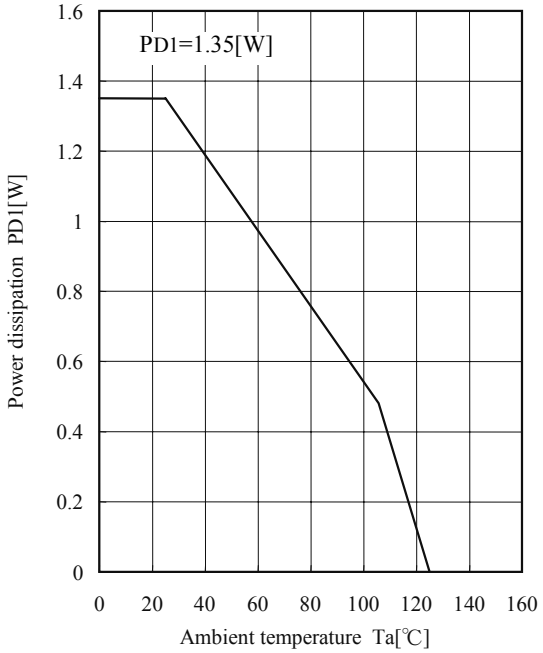

IRIS-A6351
TF-PD2 Curve for Control IC

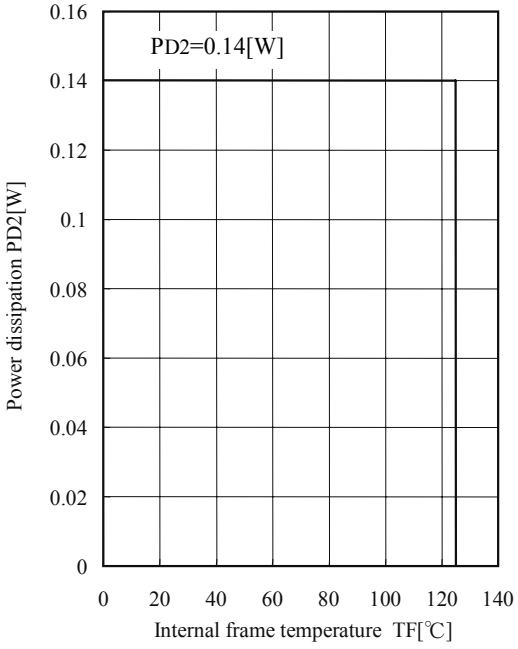

IRIS-A6351
Transient thermal resistance curve

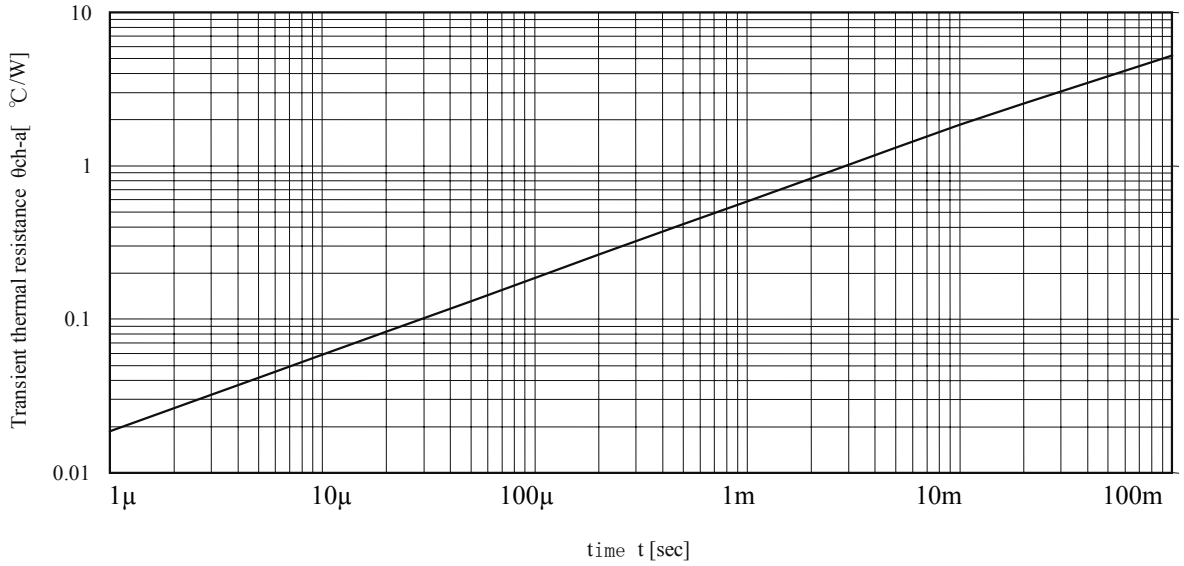

Block Diagram

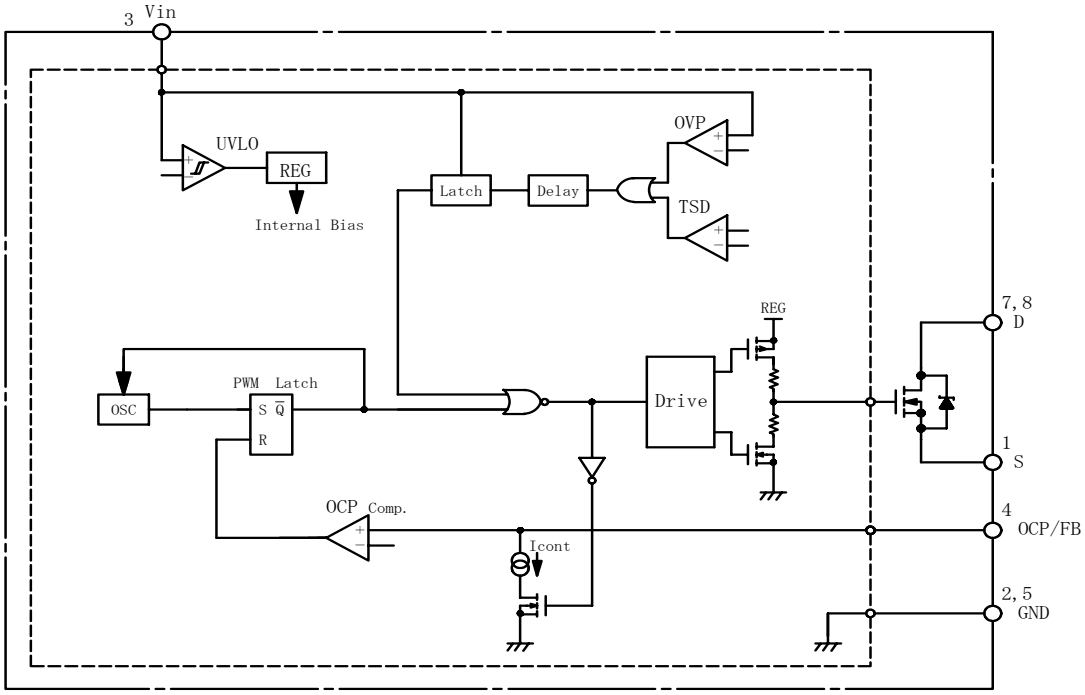

Lead Assignments

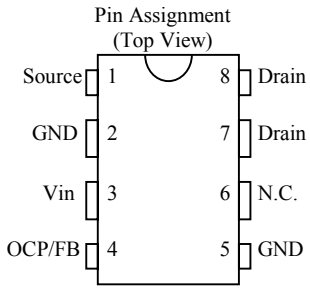

Pin No.	Symbol	Description	Function
1	S	Source Pin	MOSFET source
2	GND	Ground Pin	Ground
3	Vin	Power supply Pin	Input of power supply for control circuit
4	OCP/FB	Overcurrent / Feedback Pin	Input of overcurrent detection signal / constant voltage control signal
5	GND	Ground Pin	Ground
6	N.C.	-	Not Connected
7,8	D	Drain Pin	MOSFET drain

Other Functions

O.V.P. – Overvoltage Protection Circuit

T.S.D. – Thermal Shutdown Circuit

Case Outline

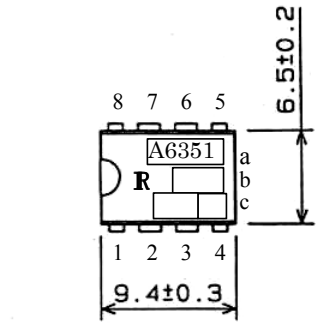

a. Type Number
b. Lot Number
1st letter : The last digit of year
2nd letter : Month
(1 to 9 for Jan. to Sept.,
O for Oct. N for Nov. D for Dec.)
3rd letter : Week
1～3 : Arabic numerals
c. Registration Number

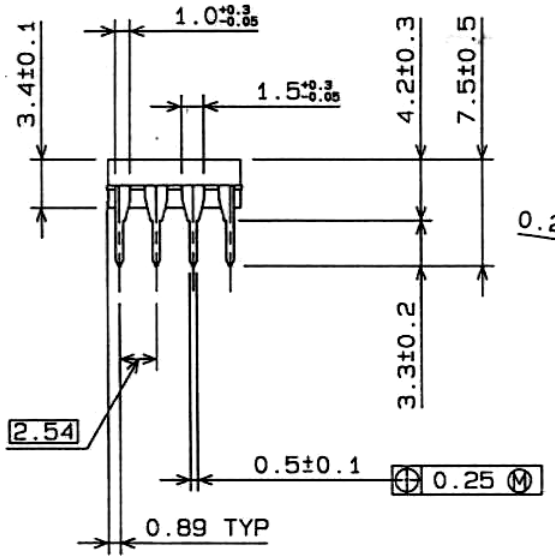

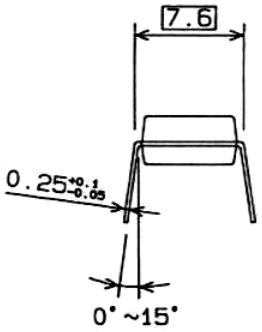

Material of Pin : Cu
Treatment of Pin : Solder plating
Weight: Approx. 0.51g

Data and specifications subject to change without notice.

International
IOR Rectifier

IR WORLD HEADQUARTERS: 233 Kansas St., El Segundo, California 90245, USA Tel: (310) 252-7105

TAC FAX: (310) 252-7903

Visit us at www.irf.com for sales contact information.