International
IOR Rectifier

PD - 91553F

IRFN9140
JANTX2N7236U
JANTXV2N7236U
JANS2N7236U
REF:MIL-PRF-19500/595
100V, P-CHANNEL
HEXFET® MOSFETTECHNOLOGY

POWER MOSFET
SURFACE MOUNT(SMD-1)

Product Summary

Part Number	$R_{DS(on)}$	I_D
IRFN9140	0.20Ω	-18A

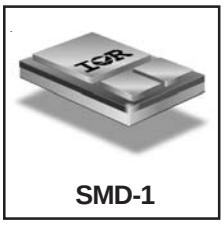

SMD-1

HEXFET® MOSFET technology is the key to International Rectifier's advanced line of power MOSFET transistors. The efficient geometry design achieves very low on-state resistance combined with high transconductance. HEXFET transistors also feature all of the well-established advantages of MOSFETs, such as voltage control, very fast switching, ease of paralleling and electrical parameter temperature stability. They are well-suited for applications such as switching power supplies, motor controls, inverters, choppers, audio amplifiers, high energy pulse circuits, and virtually any application where high reliability is required. The HEXFET transistor's totally isolated package eliminates the need for additional isolating material between the device and the heatsink. This improves thermal efficiency and reduces drain capacitance.

Features:

- Simple Drive Requirements
- Ease of Paralleling
- Hermetically Sealed
- Electrically Isolated
- Surface Mount
- Dynamic dv/dt Rating
- Light-weight

Absolute Maximum Ratings

	Parameter		Units
I_D @ V_{GS} = -10V, T_C = 25°C	Continuous Drain Current	-18	A
I_D @ V_{GS} = -10V, T_C = 100°C	Continuous Drain Current	-11	
I_{DM}	Pulsed Drain Current ①	-72	
P_D @ T_C = 25°C	Max. Power Dissipation	125	W
	Linear Derating Factor	1.0	W/°C
V_{GS}	Gate-to-Source Voltage	±20	V
E_{AS}	Single Pulse Avalanche Energy ②	500	mJ
I_{AR}	Avalanche Current ①	-18	A
E_{AR}	Repetitive Avalanche Energy ①	12.5	mJ
dv/dt	Peak Diode Recovery dv/dt ③	-5.0	V/ns
T_J	Operating Junction	-55 to 150	°C
T_{STG}	Storage Temperature Range		
	Package Mounting Surface Temperature	300 (for 5 S)	
	Weight	2.6(typical)	g

For footnotes refer to the last page

Electrical Characteristics @ Tj = 25°C (Unless Otherwise Specified)

	Parameter	Min	Typ	Max	Units	Test Conditions
BV_{DSS}	Drain-to-Source Breakdown Voltage	-100	—	—	V	V_{GS} = 0V, I_D = -1.0mA
$\Delta BV_{DSS}/\Delta T_J$	Temperature Coefficient of Breakdown Voltage	—	-0.087	—	V/°C	Reference to 25°C, I_D = -1.0mA
$R_{DS(on)}$	Static Drain-to-Source On-State Resistance	—	—	0.20	Ω	V_{GS} = -10V, I_D = -11A④
		—	—	0.22		V_{GS} = -10V, I_D = -18A ④
$V_{GS(th)}$	Gate Threshold Voltage	-2.0	—	-4.0	V	V_{DS} = V_{GS}, I_D = -250µA
g_{fs}	Forward Transconductance	6.2	—	—	S (℧)	V_{DS} > -15V, I_{DS} = -11A④
I_{DSS}	Zero Gate Voltage Drain Current	—	—	-25	µA	V_{DS}= -80V, V_{GS}= 0V
		—	—	-250		V_{DS} = -80V, V_{GS} = 0V, T_J = 125°C
I_{GSS}	Gate-to-Source Leakage Forward	—	—	-100	nA	V_{GS} = -20V
I_{GSS}	Gate-to-Source Leakage Reverse	—	—	100		V_{GS} = 20V
Q_g	Total Gate Charge	—	—	60	nC	V_{GS} = -10V, $ID_=$ -18A
Q_{gs}	Gate-to-Source Charge	—	—	13		V_{DS} = -50V
Q_{gd}	Gate-to-Drain ('Miller') Charge	—	—	35.2		
$t_{d(on)}$	Turn-On Delay Time	—	—	35	ns	V_{DD} = -50V, I_D = -18A
t_r	Rise Time	—	—	85		R_G = 9.1Ω, V_{GS} = -10V
$t_{d(off)}$	Turn-Off Delay Time	—	—	85		
t_f	Fall Time	—	—	65		
$L_S + L_D$	Total Inductance	—	4.0	—	nH	Measured from the center of drain pad to center of source pad
C_{iss}	Input Capacitance	—	1400		pF	V_{GS} = 0V, V_{DS} = -25V
C_{oss}	Output Capacitance	—	600	—		f = 1.0MHz
C_{rss}	Reverse Transfer Capacitance	—	200	—		

Source-Drain Diode Ratings and Characteristics

	Parameter	Min	Typ	Max	Units	Test Conditions
I_S	Continuous Source Current (Body Diode)	—	—	-18	A	
I_{SM}	Pulse Source Current (Body Diode) ①	—	—	-72		
V_{SD}	Diode Forward Voltage	—	—	-5.0	V	T_j = 25°C, I_S = -18A, V_{GS} = 0V ④
t_{rr}	Reverse Recovery Time	—	—	280	nS	T_j = 25°C, I_F = -18A, di/dt ≤-100A/µs
Q_{RR}	Reverse Recovery Charge	—	—	3.6	µc	V_{DD} ≤ -30V ④
t_{on}	Forward Turn-On Time	Intrinsic turn-on time is negligible. Turn-on speed is substantially controlled by L_S + L_D.				

Thermal Resistance

	Parameter	Min	Typ	Max	Units	Test Conditions
R_{thJC}	Junction to Case	—	—	1.0	°C/W	
$R_{thJ\text{-}PCB}$	Junction to PC Board	—	4.0	—		Soldered to a copper-clad PC board

Note: Corresponding Spice and Saber models are available on International Rectifier Website.

For footnotes refer to the last page

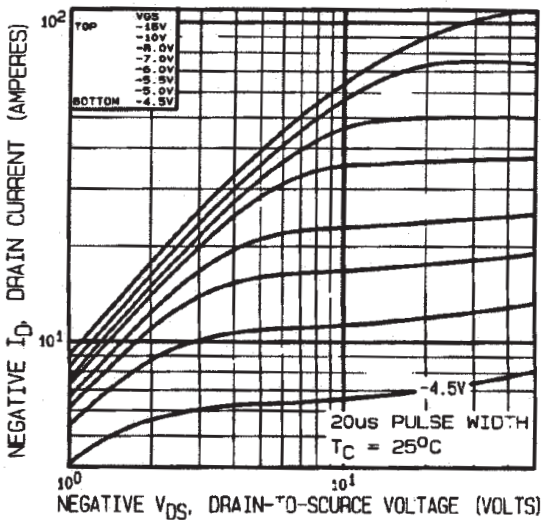

Fig 1. Typical Output Characteristics

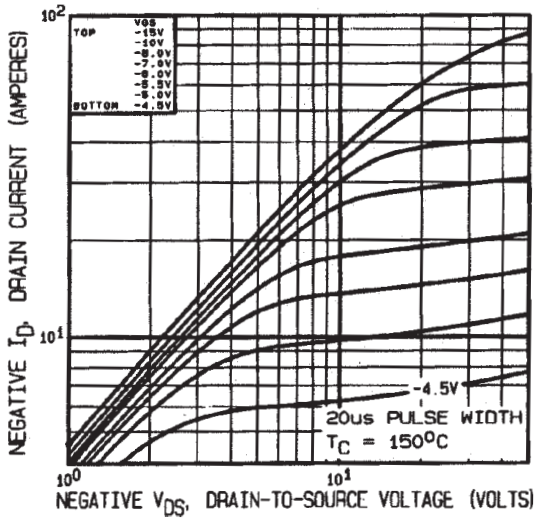

Fig 2. Typical Output Characteristics

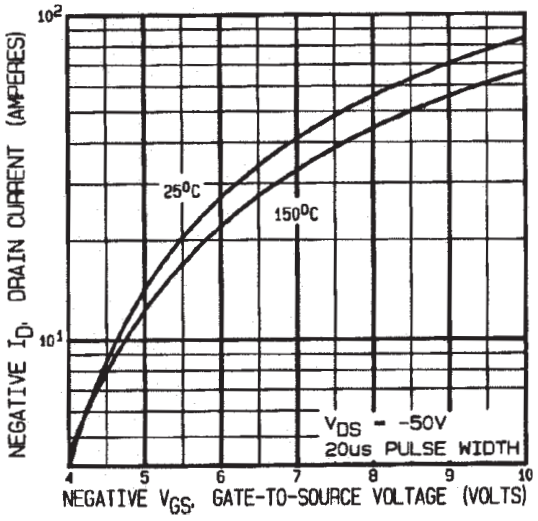

Fig 3. Typical Transfer Characteristics

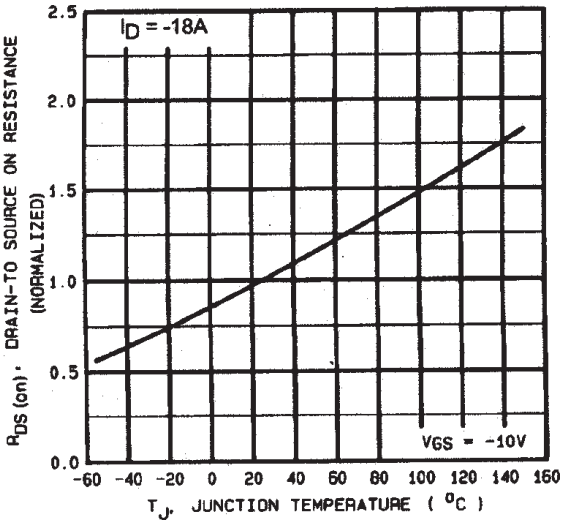

Fig 4. Normalized On-Resistance Vs. Temperature

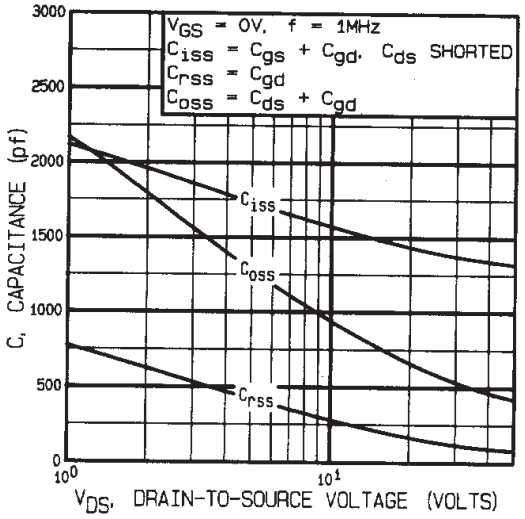

Fig 5. Typical Capacitance Vs. Drain-to-Source Voltage

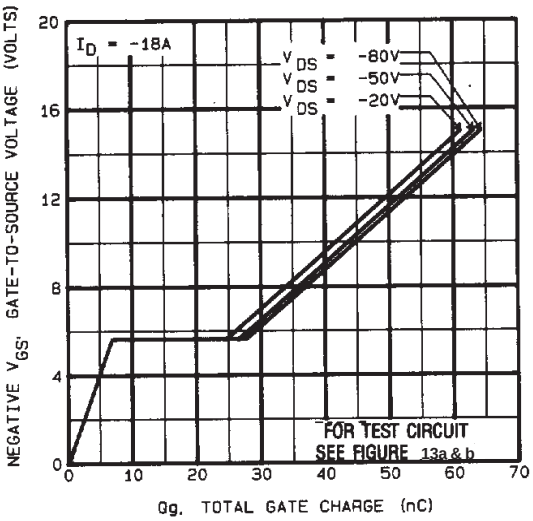

Fig 6. Typical Gate Charge Vs. Gate-to-Source Voltage

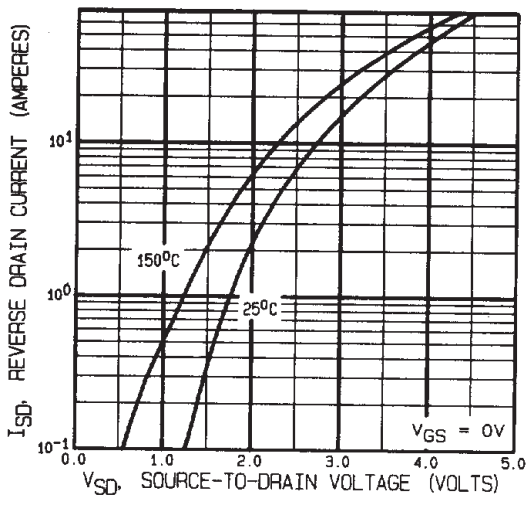

Fig 7. Typical Source-Drain Diode Forward Voltage

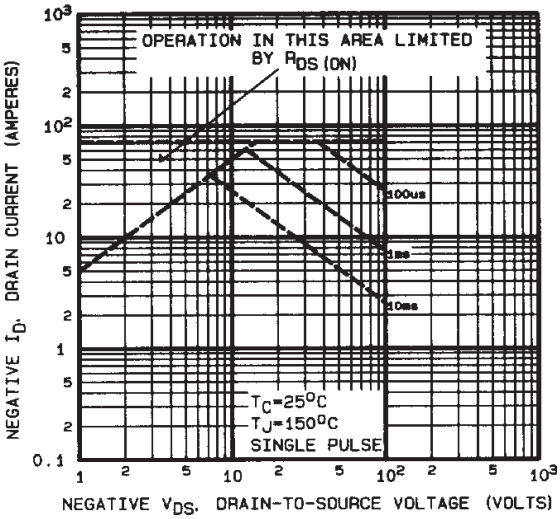

Fig 8. Maximum Safe Operating Area

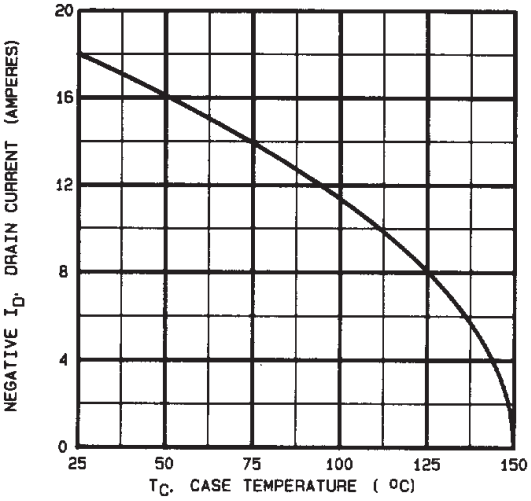

Fig 9. Maximum Drain Current Vs. Case Temperature

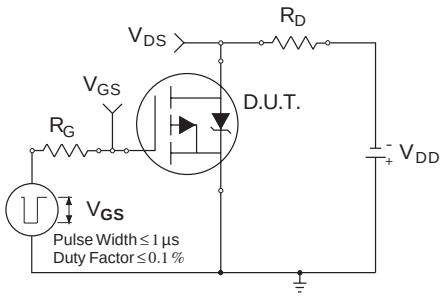

Fig 10a. Switching Time Test Circuit

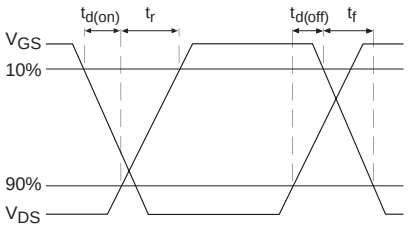

Fig 10b. Switching Time Waveforms

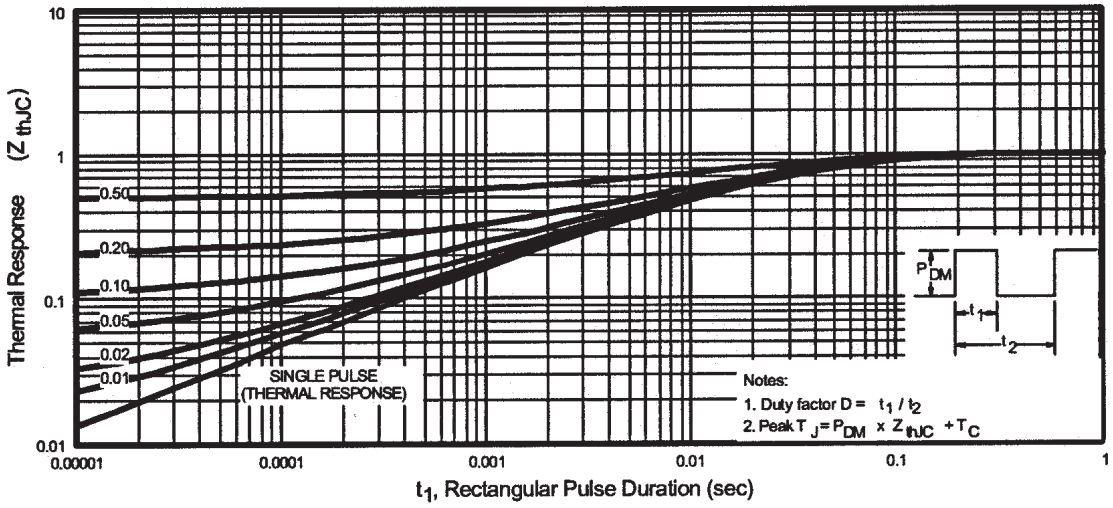

Fig 11. Maximum Effective Transient Thermal Impedance, Junction-to-Case

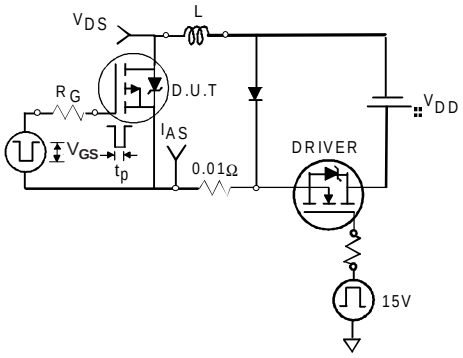

Fig 12a. Unclamped Inductive Test Circuit

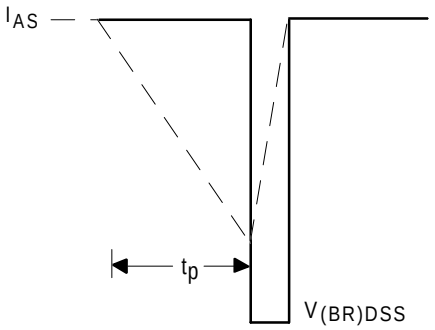

Fig 12b. Unclamped Inductive Waveforms

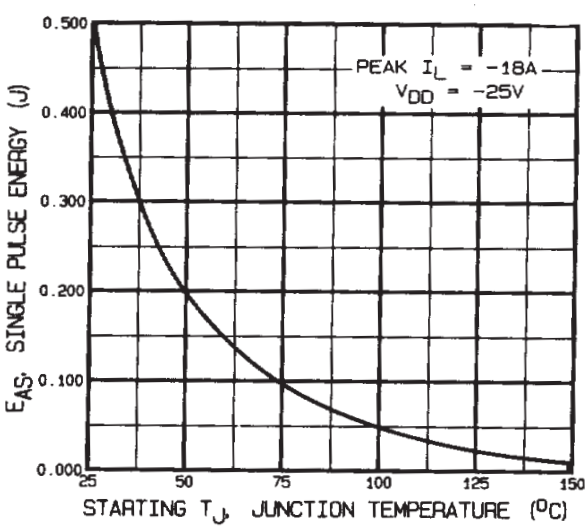

Fig 12c. Maximum Avalanche Energy Vs. Drain Current

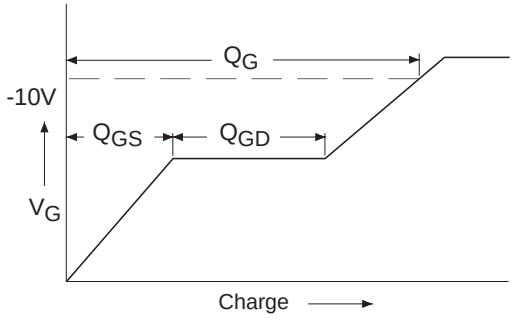

Fig 13a. Basic Gate Charge Waveform

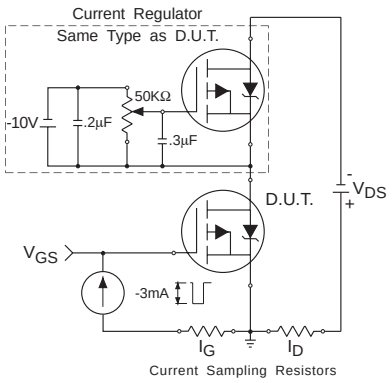

Fig 13b. Gate Charge Test Circuit

Foot Notes:

① Repetitive Rating; Pulse width limited by maximum junction temperature.

② V_{DD} =-25V, starting T_J = 25°C, L = 3.1mH Peak I_L = -18A, V_{GS} = -10V

③ I_{SD} ≤ -18A, di/dt ≤ –100A/μs, V_{DD}≤ -100V, T_J ≤ 150°C

④ Pulse width ≤ 300 μs; Duty Cycle ≤ 2%

Case Outline and Dimensions — SMD-1

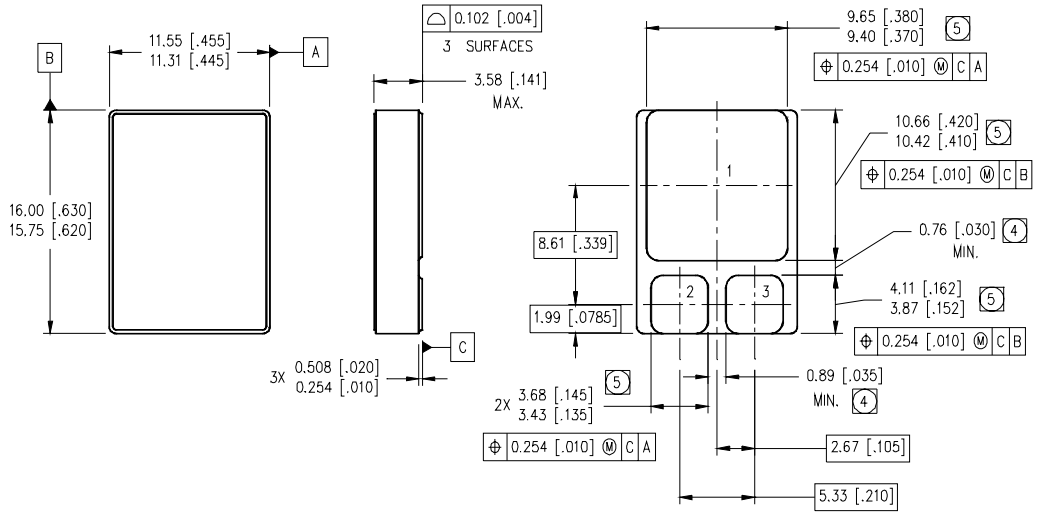

NOTES:

1. DIMENSIONING & TOLERANCING PER ASME Y14.5M–1994.
2. CONTROLLING DIMENSION: INCH.
3. DIMENSIONS ARE SHOWN IN MILLIMETERS [INCHES].
4. DIMENSION INCLUDES METALLIZATION FLASH.
5. DIMENSION DOES NOT INCLUDE METALLIZATION FLASH.

PAD ASSIGNMENTS
1- DRAIN
2- GATE
3- SOURCE

International
IOR Rectifier

IR WORLD HEADQUARTERS: 233 Kansas St., El Segundo, California 90245, USA Tel: (310) 252-7105
IR LEOMINSTER : 205 Crawford St., Leominster, Massachusetts 01453, USA Tel: (978) 534-5776
TAC Fax: (310) 252-7903
Visit us at www.irf.com for sales contact information.
Data and specifications subject to change without notice. 09/03