International
IOR Rectifier

PD - 95463

IRF3704ZPbF
IRF3704ZSPbF
IRF3704ZLPbF

HEXFET® Power MOSFET

Applications

- High Frequency Synchronous Buck Converters for Computer Processor Power
- Lead-Free

V_{DSS}	$R_{DS(on)}$ max	Qg
20V	7.9mΩ	8.7nC

Benefits

- Low $R_{DS(on)}$ at 4.5V V_{GS}
- Ultra-Low Gate Impedance
- Fully Characterized Avalanche Voltage and Current



TO-220AB
IRF3704Z



D^2Pak
IRF3704ZS



TO-262
IRF3704ZL

Absolute Maximum Ratings

	Parameter	Max.	Units
V_{DS}	Drain-to-Source Voltage	20	V
V_{GS}	Gate-to-Source Voltage	± 20	
I_D @ T_C = 25°C	Continuous Drain Current, V_{GS} @ 10V	67 ⑥	A
I_D @ T_C = 100°C	Continuous Drain Current, V_{GS} @ 10V	47 ⑥	
I_{DM}	Pulsed Drain Current ①	260	
P_D @T_C = 25°C	Maximum Power Dissipation	57	W
P_D @T_C = 100°C	Maximum Power Dissipation	28	
	Linear Derating Factor	0.38	W/°C
T_J T_{STG}	Operating Junction and Storage Temperature Range	-55 to + 175	°C
	Soldering Temperature, for 10 seconds	300 (1.6mm from case)	
	Mounting Torque, 6-32 or M3 screw ④	10 lbf•in (1.1N•m)	

Thermal Resistance

	Parameter	Typ.	Max.	Units
$R_{\theta JC}$	Junction-to-Case ⑦	—	2.65	°C/W
$R_{\theta CS}$	Case-to-Sink, Flat Greased Surface ④	0.50	—	
$R_{\theta JA}$	Junction-to-Ambient ④⑦	—	62	
$R_{\theta JA}$	Junction-to-Ambient (PCB Mount) ⑤⑦	—	40	

Notes ① through ⑦ are on page 12

Static @ T_J = 25°C (unless otherwise specified)

	Parameter	Min.	Typ.	Max.	Units	Conditions
BV_{DSS}	Drain-to-Source Breakdown Voltage	20	—	—	V	V_{GS} = 0V, I_D = 250µA
$\Delta BV_{DSS}/\Delta T_J$	Breakdown Voltage Temp. Coefficient	—	0.014	—	V/°C	Reference to 25°C, I_D = 1mA
$R_{DS(on)}$	Static Drain-to-Source On-Resistance	—	6.5	7.9	mΩ	V_{GS} = 10V, I_D = 21A ③
		—	9.1	11.1		V_{GS} = 4.5V, I_D = 17A ③
$V_{GS(th)}$	Gate Threshold Voltage	1.65	2.1	2.55	V	V_{DS} = V_{GS}, I_D = 250µA
$\Delta V_{GS(th)}/\Delta T_J$	Gate Threshold Voltage Coefficient	—	-5.6	—	mV/°C	
I_{DSS}	Drain-to-Source Leakage Current	—	—	1.0	µA	V_{DS} = 16V, V_{GS} = 0V
		—	—	150		V_{DS} = 16V, V_{GS} = 0V, T_J = 125°C
I_{GSS}	Gate-to-Source Forward Leakage	—	—	100	nA	V_{GS} = 20V
	Gate-to-Source Reverse Leakage	—	—	-100		V_{GS} = -20V
gfs	Forward Transconductance	48	—	—	S	V_{DS} = 10V, I_D = 17A
Q_g	Total Gate Charge	—	8.7	13		
Q_{gs1}	Pre-Vth Gate-to-Source Charge	—	2.9	—		V_{DS} = 10V
Q_{gs2}	Post-Vth Gate-to-Source Charge	—	1.1	—	nC	V_{GS} = 4.5V
Q_{gd}	Gate-to-Drain Charge	—	2.3	—		I_D = 17A
Q_{godr}	Gate Charge Overdrive	—	2.4	—		See Fig. 16
Q_{sw}	Switch Charge (Q_{gs2} + Q_{gd})	—	3.4	—		
Q_{oss}	Output Charge	—	5.6	—	nC	V_{DS} = 10V, V_{GS} = 0V
$t_{d(on)}$	Turn-On Delay Time	—	8.9	—		V_{DD} = 10V, V_{GS} = 4.5V ③
t_r	Rise Time	—	38	—		I_D = 17A
$t_{d(off)}$	Turn-Off Delay Time	—	11	—	ns	Clamped Inductive Load
t_f	Fall Time	—	4.2	—		
C_{iss}	Input Capacitance	—	1220	—		V_{GS} = 0V
C_{oss}	Output Capacitance	—	390	—	pF	V_{DS} = 10V
C_{rss}	Reverse Transfer Capacitance	—	190	—		f = 1.0MHz

Avalanche Characteristics

	Parameter	Typ.	Max.	Units
E_{AS}	Single Pulse Avalanche Energy②	—	36	mJ
I_{AR}	Avalanche Current ①	—	17	A
E_{AR}	Repetitive Avalanche Energy ①	—	5.7	mJ

Diode Characteristics

	Parameter	Min.	Typ.	Max.	Units	Conditions
I_S	Continuous Source Current (Body Diode)	—	—	67 ⑥	A	MOSFET symbol showing the integral reverse p-n junction diode.
I_{SM}	Pulsed Source Current (Body Diode) ①	—	—	260		
V_{SD}	Diode Forward Voltage	—	—	1.0	V	T_J = 25°C, I_S = 17A, V_{GS} = 0V ③
t_{rr}	Reverse Recovery Time	—	11	17	ns	T_J = 25°C, I_F = 17A, V_{DD} = 10V
Q_{rr}	Reverse Recovery Charge	—	2.3	3.5	nC	di/dt = 100A/µs ③

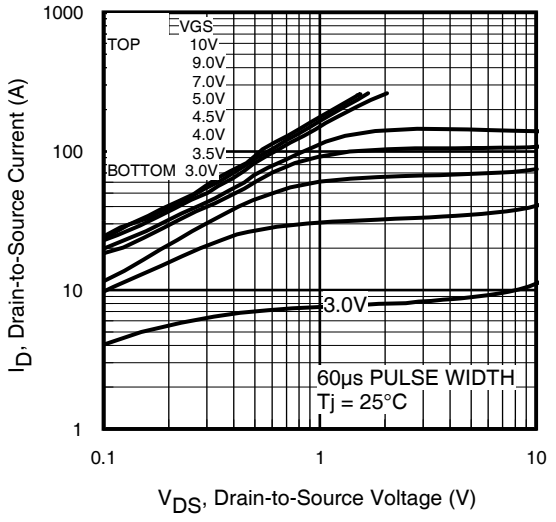

Fig 1. Typical Output Characteristics

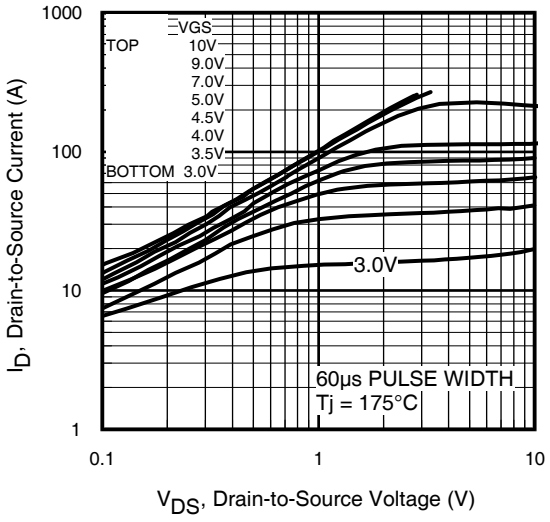

Fig 2. Typical Output Characteristics

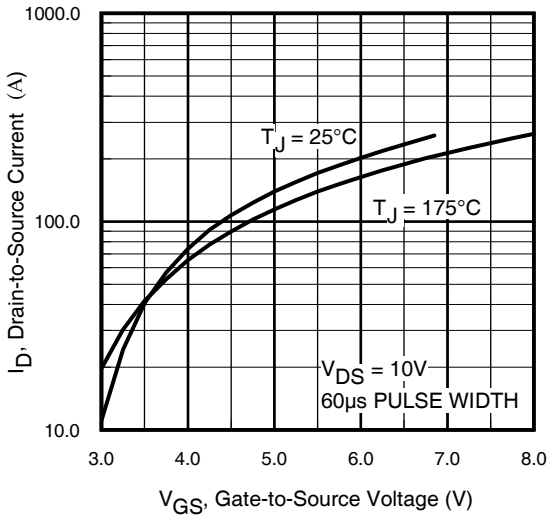

Fig 3. Typical Transfer Characteristics

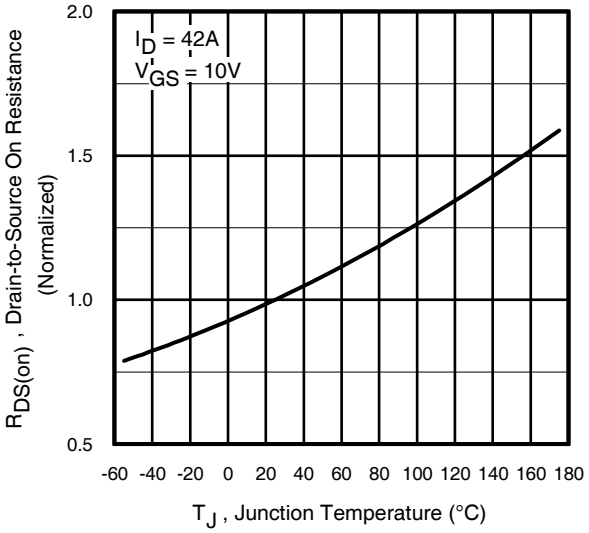

Fig 4. Normalized On-Resistance vs. Temperature

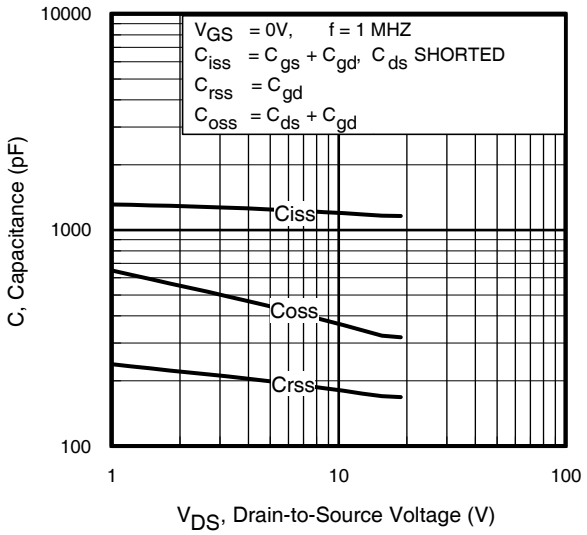

Fig 5. Typical Capacitance vs. Drain-to-Source Voltage

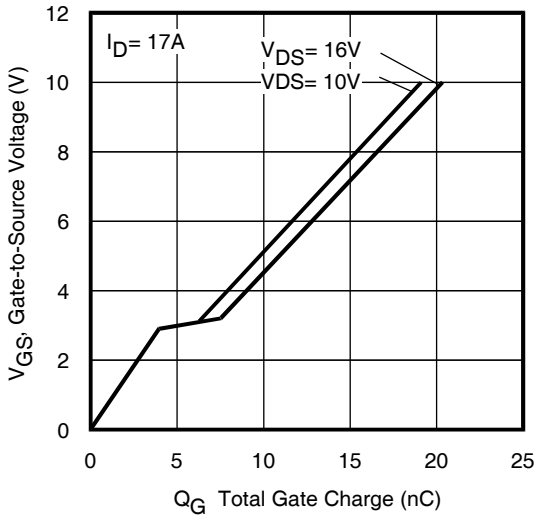

Fig 6. Typical Gate Charge vs. Gate-to-Source Voltage

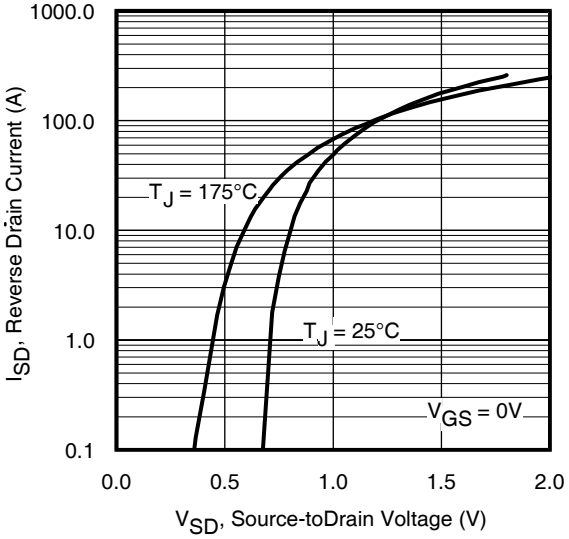

Fig 7. Typical Source-Drain Diode Forward Voltage

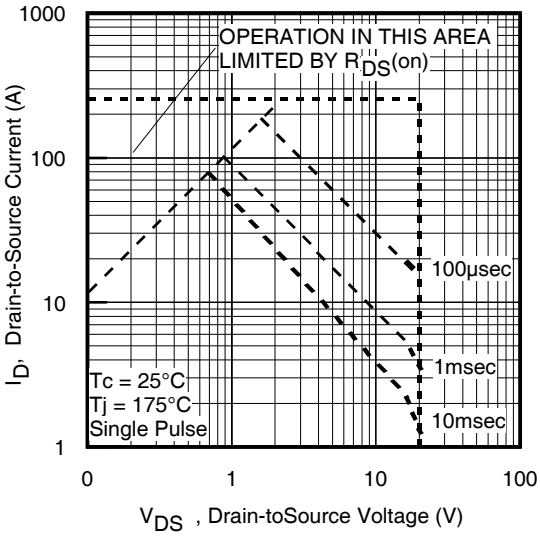

Fig 8. Maximum Safe Operating Area

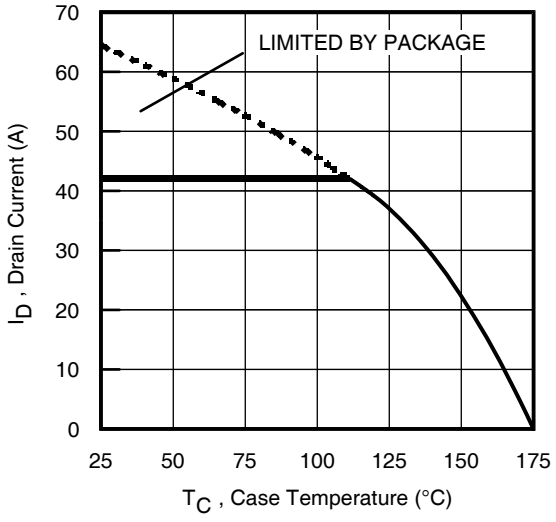

Fig 9. Maximum Drain Current vs. Case Temperature

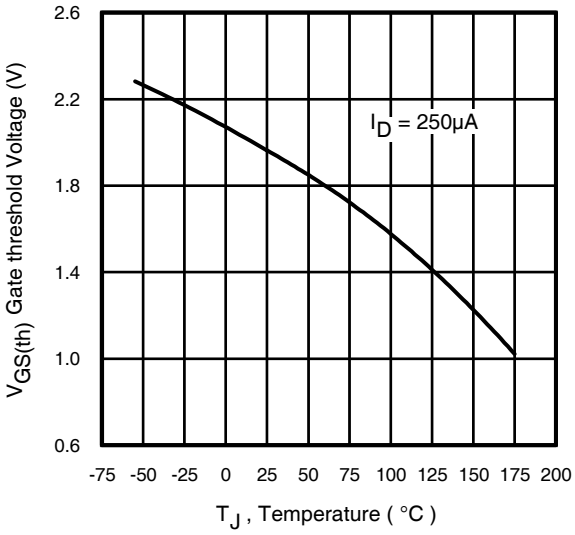

Fig 10. Threshold Voltage vs. Temperature

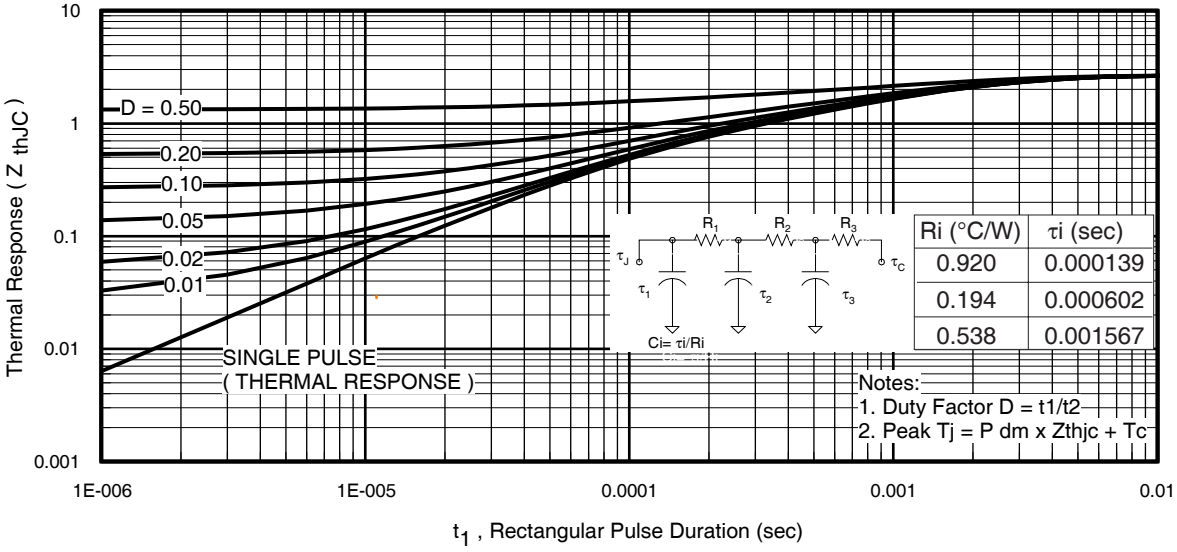

Fig 11. Maximum Effective Transient Thermal Impedance, Junction-to-Case

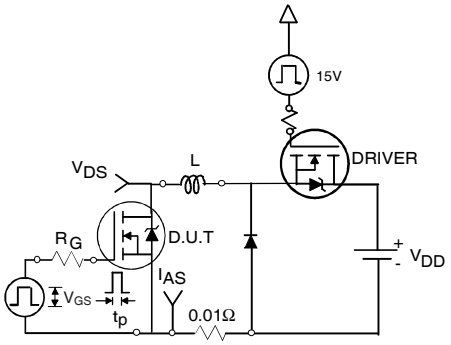

Fig 12a. Unclamped Inductive Test Circuit

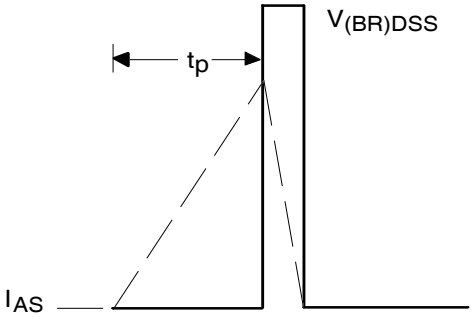

Fig 12b. Unclamped Inductive Waveforms

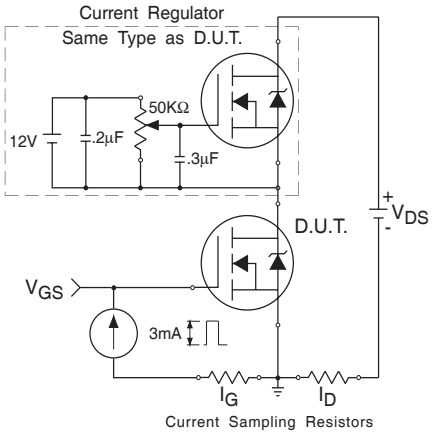

Fig 13. Gate Charge Test Circuit

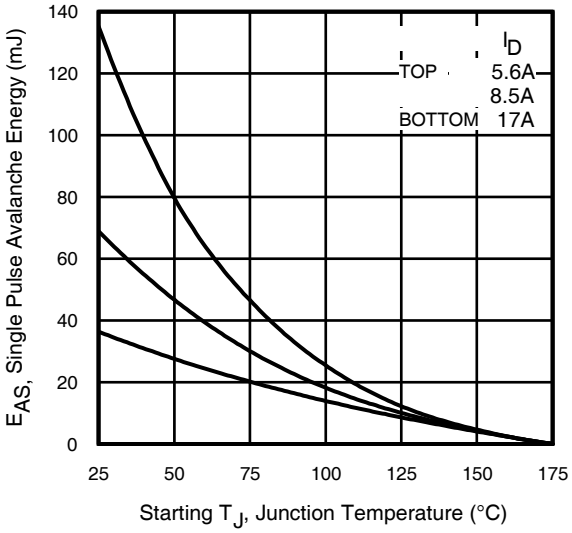

Fig 12c. Maximum Avalanche Energy vs. Drain Current

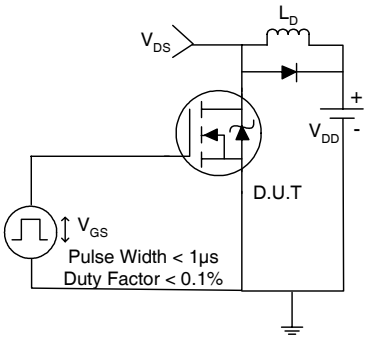

Fig 14a. Switching Time Test Circuit

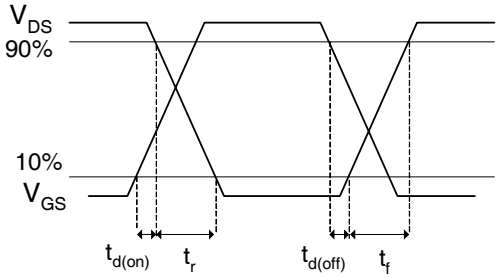

Fig 14b. Switching Time Waveforms

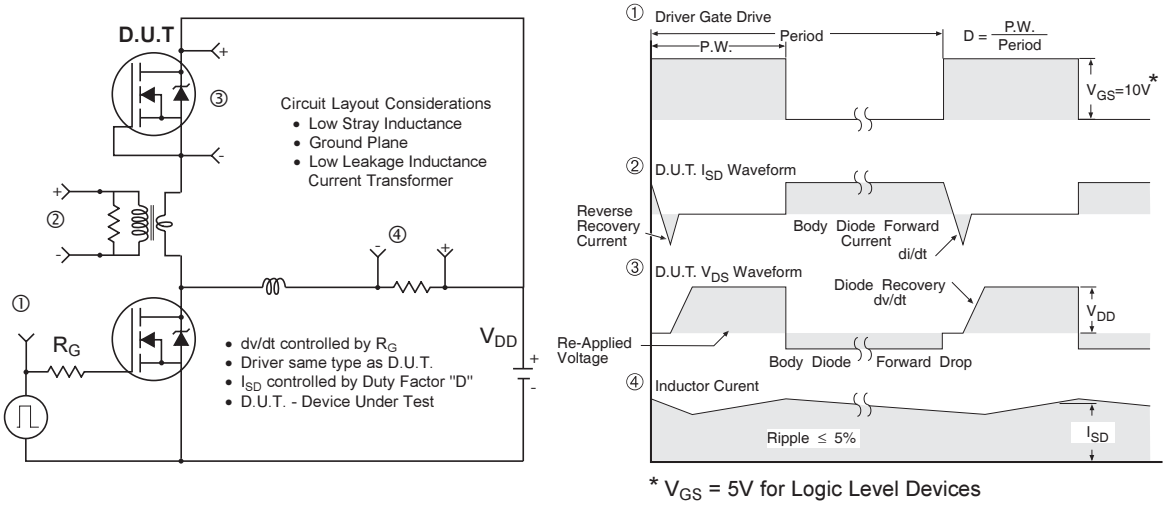

Fig 15. Peak Diode Recovery dv/dt Test Circuit for N-Channel HEXFET® Power MOSFETs

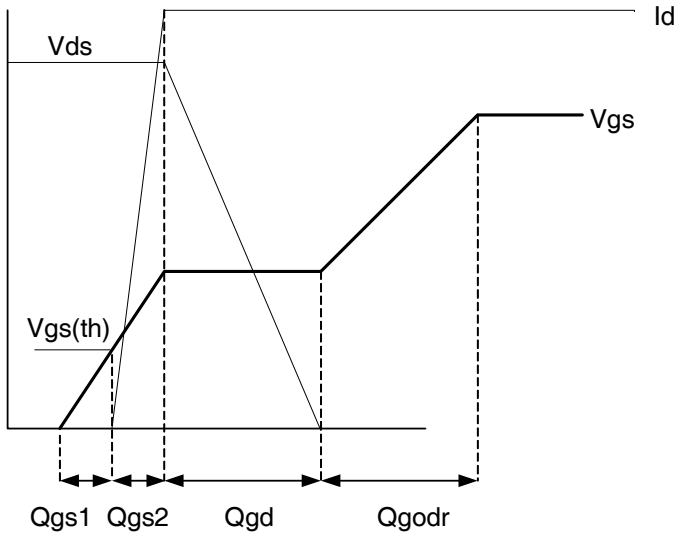

Fig 16. Gate Charge Waveform

Power MOSFET Selection for Non-Isolated DC/DC Converters

Control FET

Special attention has been given to the power losses in the switching elements of the circuit - Q1 and Q2. Power losses in the high side switch Q1, also called the Control FET, are impacted by the $R_{ds(on)}$ of the MOSFET, but these conduction losses are only about one half of the total losses.

Power losses in the control switch Q1 are given by;

$$P_{loss} = P_{conduction} + P_{switching} + P_{drive} + P_{output}$$

This can be expanded and approximated by;

$$P_{loss} = \left(I_{rms}^{\ 2} \times R_{ds(on)}\right) + \left(I \times \frac{Q_{gd}}{i_g} \times V_{in} \times f\right) + \left(I \times \frac{Q_{gs2}}{i_g} \times V_{in} \times f\right) + \left(Q_g \times V_g \times f\right) + \left(\frac{Q_{oss}}{2} \times V_{in} \times f\right)$$

This simplified loss equation includes the terms Q_{gs2} and Q_{oss} which are new to Power MOSFET data sheets.

Q_{gs2} is a sub element of traditional gate-source charge that is included in all MOSFET data sheets. The importance of splitting this gate-source charge into two sub elements, Q_{gs1} and Q_{gs2}, can be seen from Fig 16.

Q_{gs2} indicates the charge that must be supplied by the gate driver between the time that the threshold voltage has been reached and the time the drain current rises to I_{dmax} at which time the drain voltage begins to change. Minimizing Q_{gs2} is a critical factor in reducing switching losses in Q1.

Q_{oss} is the charge that must be supplied to the output capacitance of the MOSFET during every switching cycle. Figure A shows how Q_{oss} is formed by the parallel combination of the voltage dependant (non-linear) capacitance's C_{ds} and C_{dg} when multiplied by the power supply input buss voltage.

Synchronous FET

The power loss equation for Q2 is approximated by;

$$P_{loss} = P_{conduction} + P_{drive} + P^{*}_{output}$$

$$P_{loss} = \left(I_{rms}^{\ 2} \times R_{ds(on)}\right) + \left(Q_g \times V_g \times f\right) + \left(\frac{Q_{oss}}{2} \times V_{in} \times f\right) + \left(Q_{rr} \times V_{in} \times f\right)$$

*dissipated primarily in Q1.

For the synchronous MOSFET Q2, $R_{ds(on)}$ is an important characteristic; however, once again the importance of gate charge must not be overlooked since it impacts three critical areas. Under light load the MOSFET must still be turned on and off by the control IC so the gate drive losses become much more significant. Secondly, the output charge Q_{oss} and reverse recovery charge Q_{rr} both generate losses that are transfered to Q1 and increase the dissipation in that device. Thirdly, gate charge will impact the MOSFETs' susceptibility to Cdv/dt turn on.

The drain of Q2 is connected to the switching node of the converter and therefore sees transitions between ground and V_{in}. As Q1 turns on and off there is a rate of change of drain voltage dV/dt which is capacitively coupled to the gate of Q2 and can induce a voltage spike on the gate that is sufficient to turn the MOSFET on, resulting in shoot-through current . The ratio of Q_{gd}/Q_{gs1} must be minimized to reduce the potential for Cdv/dt turn on.

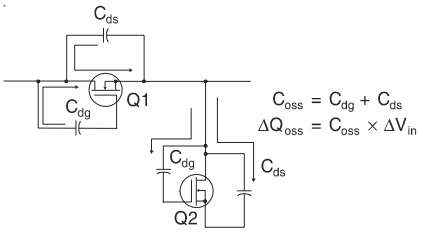

Figure A: Q_{oss} Characteristic

TO-220AB Package Outline

Dimensions are shown in millimeters (inches)

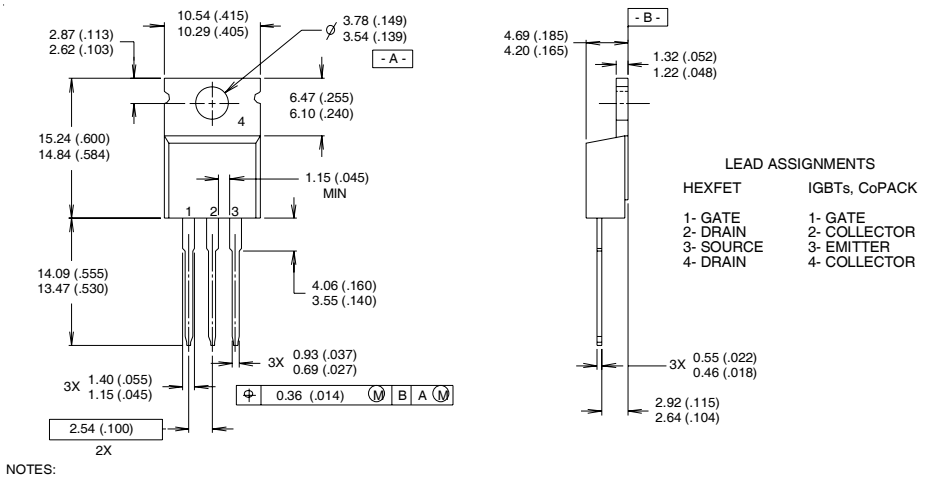

NOTES:

1 DIMENSIONING & TOLERANCING PER ANSI Y14.5M, 1982.
2 CONTROLLING DIMENSION : INCH
3 OUTLINE CONFORMS TO JEDEC OUTLINE TO-220AB.
4 HEATSINK & LEAD MEASUREMENTS DO NOT INCLUDE BURRS.

TO-220AB Part Marking Information

EXAMPLE: THIS IS AN IRF1010
LOT CODE 1789
ASSEMBLED ON WW 19, 1997
IN THE ASSEMBLY LINE "C"

Note: "P" in assembly line position indicates "Lead-Free"

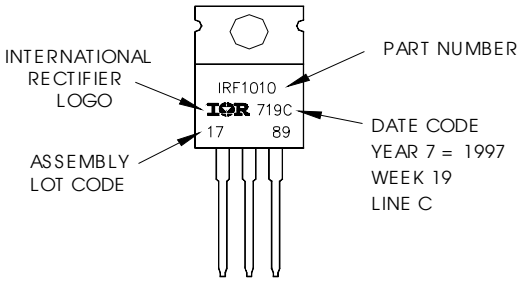

D²Pak Package Outline

Dimensions are shown in millimeters (inches)

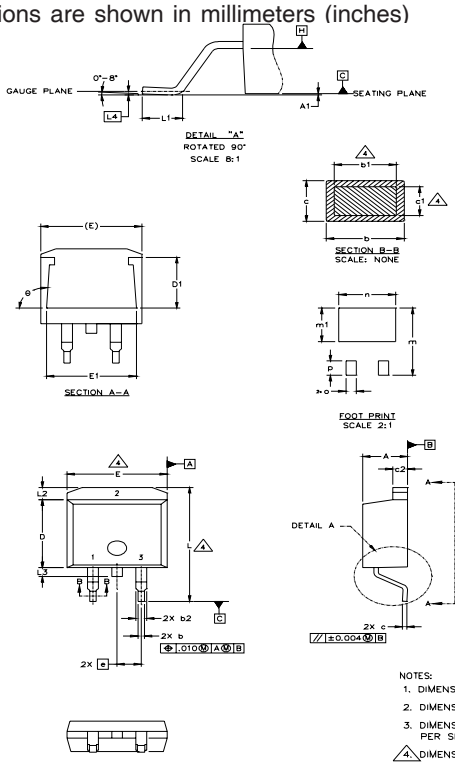

SYMBOL	DIMENSIONS				NOTES
	MILLIMETERS		INCHES		
	MIN.	MAX.	MIN.	MAX.	
A	4.06	4.83	.160	.190	
A1		0.127		.005	
b	0.51	0.99	.020	.039	
b1	0.51	0.89	.020	.035	4
b2	1.14	1.40	.045	.055	
c	0.43	0.63	.017	.025	
c1	0.38	0.74	.015	.029	4
c2	1.14	1.40	.045	.055	
D	8.51	9.65	.335	.380	3
D1	5.33		.210		
E	9.65	10.67	.380	.420	3
E1	6.22		.245		
e	2.54 BSC		.100 BSC		
L	14.61	15.88	.575	.625	
L1	1.78	2.79	.070	.110	
L2		1.65		.065	
L3	1.27	1.78	.050	.070	
L4	0.25 BSC		.010 BSC		
m	17.78		.700		
m1	8.89		.350		
n	11.43		.450		
o	2.08		.082		
p	3.81		.150		
θ	90°	93°	90°	93°	

LEAD ASSIGNMENTS

HEXFET	IGBTs, CoPACK	DIODES
1.– GATE	1.– GATE	1.– ANODE *
2.– DRAIN	2.– COLLECTOR	2.– CATHODE
3.– SOURCE	3.– EMITTER	3.– ANODE

* PART DEPENDENT.

NOTES:
1. DIMENSIONING AND TOLERANCING PER ASME Y14.5M–1994
2. DIMENSIONS ARE SHOWN IN MILLIMETERS [INCHES].
3. DIMENSION D & E DO NOT INCLUDE MOLD FLASH. MOLD FLASH SHALL NOT EXCEED 0.127 [.005"] PER SIDE. THESE DIMENSIONS ARE MEASURED AT THE OUTMOST EXTREMES OF THE PLASTIC BODY.
4. DIMENSION b1 AND c1 APPLY TO BASE METAL ONLY.
5. CONTROLLING DIMENSION: INCH.

D²Pak Part Marking Information (Lead-Free)

EXAMPLE: THIS IS AN IRF530S WITH
LOT CODE 8024
ASSEMBLED ON WW 02, 2000
IN THE ASSEMBLY LINE "L"

Note: "P" in assembly line
position indicates "Lead-Free"

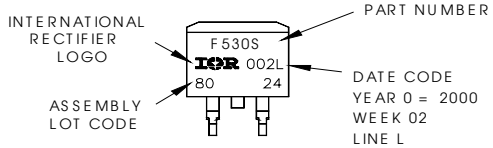

OR

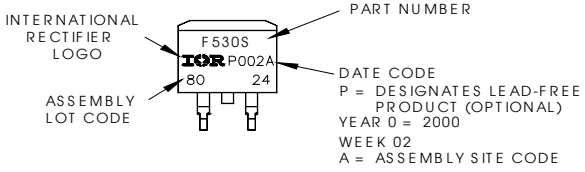

TO-262 Package Outline

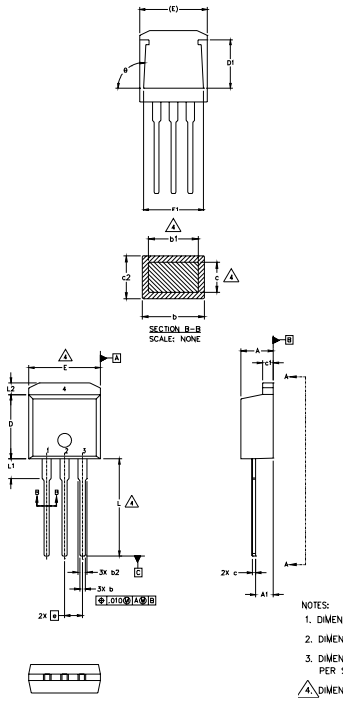

SYMBOL	DIMENSIONS				NOTES
	MILLIMETERS		INCHES		
	MIN.	MAX.	MIN.	MAX.	
A	4.06	4.83	.160	.190	
A1	2.03	2.92	.080	.115	
b	0.51	0.99	.020	.039	
b1	0.51	0.89	.020	.035	4
b2	1.14	1.40	.045	.055	
c	0.38	0.63	.015	.025	4
c1	1.14	1.40	.045	.055	
c2	0.43	.063	.017	.029	
D	8.51	9.65	.335	.380	3
D1	5.33		.210		
E	9.65	10.67	.380	.420	3
E1	6.22		.245		
e	2.54 BSC		.100 BSC		
L	13.46	14.09	.530	.555	
L1	3.56	3.71	.140	.146	
L2		1.65		.065	

LEAD ASSIGNMENTS

HEXFET
1.– GATE
2.– DRAIN
3.– SOURCE
4.– DRAIN

IGBT
1- GATE
2- COLLECTOR
3- EMITTER

NOTES:
1. DIMENSIONING AND TOLERANCING PER ASME Y14.5M–1994
2. DIMENSIONS ARE SHOWN IN MILLIMETERS [INCHES].
3. DIMENSION D & E DO NOT INCLUDE MOLD FLASH. MOLD FLASH SHALL NOT EXCEED 0.127 [.005"] PER SIDE. THESE DIMENSIONS ARE MEASURED AT THE OUTMOST EXTREMES OF THE PLASTIC BODY.
4. DIMENSION b1 AND c1 APPLY TO BASE METAL ONLY.
5. CONTROLLING DIMENSION: INCH.

TO-262 Part Marking Information

EXAMPLE: THIS IS AN IRL3103L
LOT CODE 1789
ASSEMBLED ON WW 19, 1997
IN THE ASSEMBLY LINE "C"

Note: "P" in assembly line position indicates "Lead-Free"

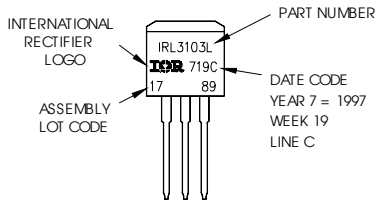

OR

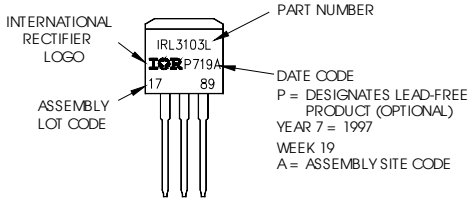

D^{2}Pak Tape & Reel Infomation

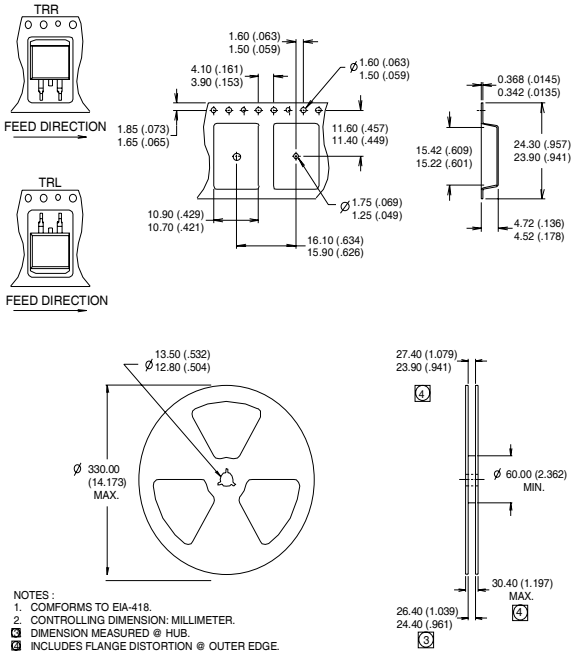

Notes:

① Repetitive rating; pulse width limited by max. junction temperature.

② Starting T_J = 25°C, L = 0.25mH, R_G = 25Ω, I_{AS} = 17A.

③ Pulse width ≤ 400µs; duty cycle ≤ 2%.

④ This is only applied to TO-220AB pakcage.

⑤ This is applied to D^{2}Pak, when mounted on 1" square PCB (FR-4 or G-10 Material). For recommended footprint and soldering techniques refer to application note #AN-994.

⑥ Calculated continuous current based on maximum allowable junction temperature. Package limitation current is 42A.

⑦ R_θ is measured at T_J approximately 90°C

TO-220AB package is not recommended for Surface Mount Application.

Data and specifications subject to change without notice.
This product has been designed and qualified for the Industrial market.
Qualification Standards can be found on IR's Web site.

International
IOR Rectifier

IR WORLD HEADQUARTERS: 233 Kansas St., El Segundo, California 90245, USA Tel: (310) 252-7105
TAC Fax: (310) 252-7903
Visit us at www.irf.com for sales contact information. 3/04

Note: For the most current drawings please refer to the IR website at:
http://www.irf.com/package/