IR3313S

PROGRAMMABLE CURRENT SENSE HIGH SIDE SWITCH

Features

- Load current feedback
- Programmable over current shutdown
- Active clamp
- ESD protection
- Input referenced to Vcc
- Over temperature shutdown
- Reverse battery protection

Product Summary

Rds(on)	7 mΩ max.
Vcc op.	6 to 32V
Current Ratio	8800
Prog. Ishutdown	10 to 90A
Vclamp	40V

Packages



D²Pak
Pin 4 and 5 fused
IR3313S

Description

The IR3313S is a fully protected 4 terminals high side switch. The input signal is referenced to Vcc. When the input voltage Vcc - Vin is higher than the specified threshold, the output power Mosfet is turned on. When the Vcc - Vin is lower than the specified Vil threshold, the output Mosfet is turned off. A current proportional to the power Mosfet current is sourced to the Ifb pin. Over current shutdown occurs when Vst-Vin > 4.5V. The current shutdown threshold is adjusted by selecting the proper RIfb. Either over current and over temperature latches off the switch. The device is reset by pulling the input pin high. Other integrated protections (ESD, reverse battery, active clamp) make the switch very rugged in automotive environment.

Typical Connection

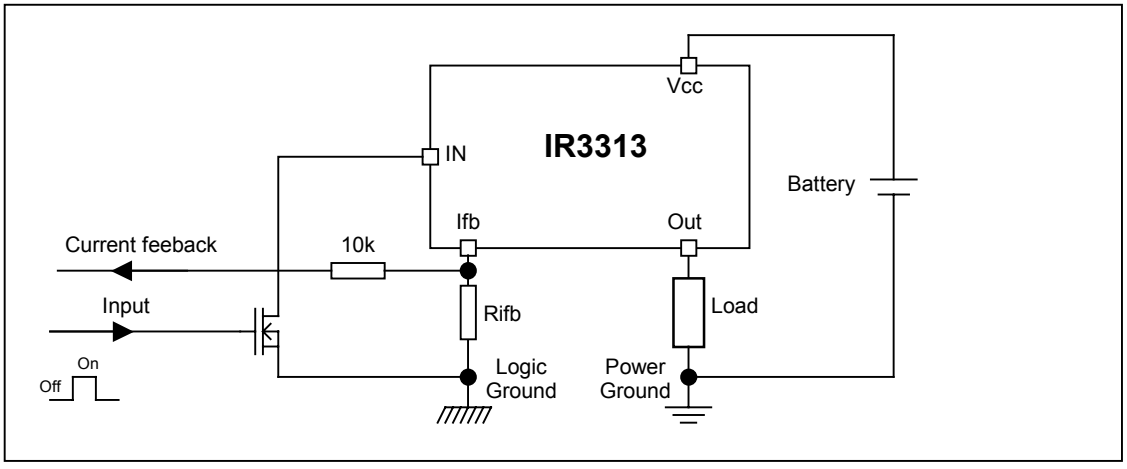

Absolute Maximum Ratings

Absolute maximum ratings indicate sustained limits beyond which damage to the device may occur. All voltage parameters are referenced to Vcc lead. (Tambient=25°C unless otherwise specified).

Symbol	Parameter	Min.	Max.	Units
Vcc-Vin	Maximum Vcc voltage	-16	37	V
Vcc-Vin cont.	Maximum continuous Vcc voltage	-16	32	
Vcc-Vfb	Maximum Ifb voltage	-16	33	
Vcc-Vout	Maximum output voltage	-0.3	37	
Ids cont.	Maximum body diode continuous current Rth=60°C/W (1)	—	2.8	A
Ids pulsed	Maximum body diode pulsed current (1)	—	100	
Pd	Maximum power dissipation Rth=60°C/W	—	2	W
ESD1	Electrostatic discharge voltage (Human body) C=100pF, R=1500Ω	—	4	kV
ESD2	Electrostatic discharge voltage (Machine Model) C=200pF,R=0Ω	—	0.5	
Tj max.	Max. storage & operating temperature junction temperature	-40	150	°C
Min Rfb	Minimum on the resistor on Ifb pin	0.3	—	kΩ
Ifb max.	Max. Ifb current	-50	50	mA

(1) Limited by junction temperature. Pulsed is also limited by wiring

Thermal Characteristics

Symbol	Parameter	Typ.	Max.	Units
Rth1	Thermal resistance junction to ambient D²-Pak Std footprint	60	—	°C/W
Rth2	Thermal resistance junction to case D²-Pak	0.7	—	

Recommended Operating Conditions

These values are given for a quick design. For operation outside these conditions, please consult the application notes.

Symbol	Parameter	Min.	Max.	Units
Iout	Continuous output current Tambient=85°C, Rth=60°C/W, Tj=125°C	—	7	A
Rifb	Recommended Ifb resistor (2)(3)	0.5	3.5	kΩ
Pulse min.	Minimum turn-on pulse width	1	—	ms
Fmax.	Maximum operating frequency	—	200	Hz

2) If Rifb is too low, the device can be damaged.
3) If Rifb is too high, the device may not switch on.

Protection Characteristics

Tj=25°C, Rifb=500 to 3.5kΩ

Symbol	Parameter	Min.	Typ.	Max.	Units	Test Conditions
Vifb-Vin@Isd	Over-current shutdown threshold	4	4.7	5.6	V	
Tsd	Over temperature threshold	—	165	—	°C	See fig. 5
OV	Over voltage protection (not latched)	33	35	39	V	
Isdf	Fixed over current shutdown	90	120	140	A	Vifb<Vifb-Vin@Isd
Isd_1k	Programmable over current shutdown 1k	30	40	50		Rifb=1kΩ
Treset	Time to reset protection	—	50	500	µs	See fig. 5
Min. pulse	Min. pulse width (no WAIT state)	200	400	1200		
WAIT	WAIT function timer	0.4	1	2	ms	See fig. 4 and 5
Rds(on) rev.	Reverse battery On state resistance	4	6.7	10	mΩ	Vcc-Vin=-14V, Iout=30A

Static Electrical Characteristics

Tj=25°C, Vcc=14V (unless otherwise specified)

Symbol	Parameter	Min.	Typ.	Max.	Units	Test Conditions
Vcc op.	Operating Voltage range	6	—	32	V	
Icc off	Supply leakage current	—	1.5	5	µA	Vin=Vcc, Vcc-Vout=14V, Vcc-Vifb=14V
Iin, on	On state IN positive current	1.5	3	6	mA	Vcc-Vin=14V
Vih	High level Input threshold voltage (4)	—	5.4	6.2	V	
Vil	Low level Input threshold voltage (4)	4	4.9	5.8		
Vhyst	Input hysteresis Vih-Vil	0.2	0.4	1		
Iout	Drain to source leakage current	—	1.2	5	µA	Vin=Vcc, Vcc-Vifb=0V, Vcc-Vout=14V
Rds(on)	On state resistance (5) Tj=25°C	4	5.5	7	mΩ	Iout=30A, Vcc-Vin=14V
	On state resistance (5) Tj=25°C	4	6	10		Iout=17A, Vcc-Vin=6V
	On state resistance (5) Tj=150°C	7	10.5	13.5		Iout=30A, Vcc-Vin=14V
V clamp1	Vcc to Vout clamp voltage 1	36	39	—	V	Iout=50mA
V clamp2	Vcc to Vout clamp voltage 2	—	40	43		Iout=30A

(4) Input thresholds are measured directly between the input pin and the tab. Any parasitic resistance in common between the load current path and the input signal path can significantly affect the thresholds.
(5) Rdson is measured between the tab and the Out pin, 5mm away from the package.

Switching Electrical Characteristics

Vcc=14V, Resistive load=0.5Ω, Tj=25°C

Symbol	Parameter	Min.	Typ.	Max.	Units	Test Conditions
Tdon	Turn on delay time to 10% Vcc	8	32	80	µs	See figure 2
Tr1	Rise time to Vcc-Vout=5V	3	16	40		
Tr2	Rise time to Vcc-Vout=0.1Vcc	10	40	100		
Eon	Turn on energy	—	4.5	—	mJ	
Tdoff	Turn off delay time	20	80	200	µs	
Tf	Fall time to Vout=10% of Vcc	8	32	80		
Eoff	Turn off energy	—	2	—	mJ	

Current Sense Characteristics

Symbol	Parameter	Min.	Typ.	Max.	Units	Test Conditions
Ratio	I Load/Ifb current ratio	7,500	8,800	9,950	—	Tj=25°C, Rfb=500Ω, Iout=60A
Ratio_TC	I Load/Ifb variation aver temperature	-5	—	+5	%	Tj=-40°C to 150°C
Offset	Load current diagnostic offset	-0.22	0	+0.2	A	Iout=2A
Trst	Ifb response time (low signal)	—	1	—	µs	90% of the Iout step

Functional Block Diagram

All values are typical

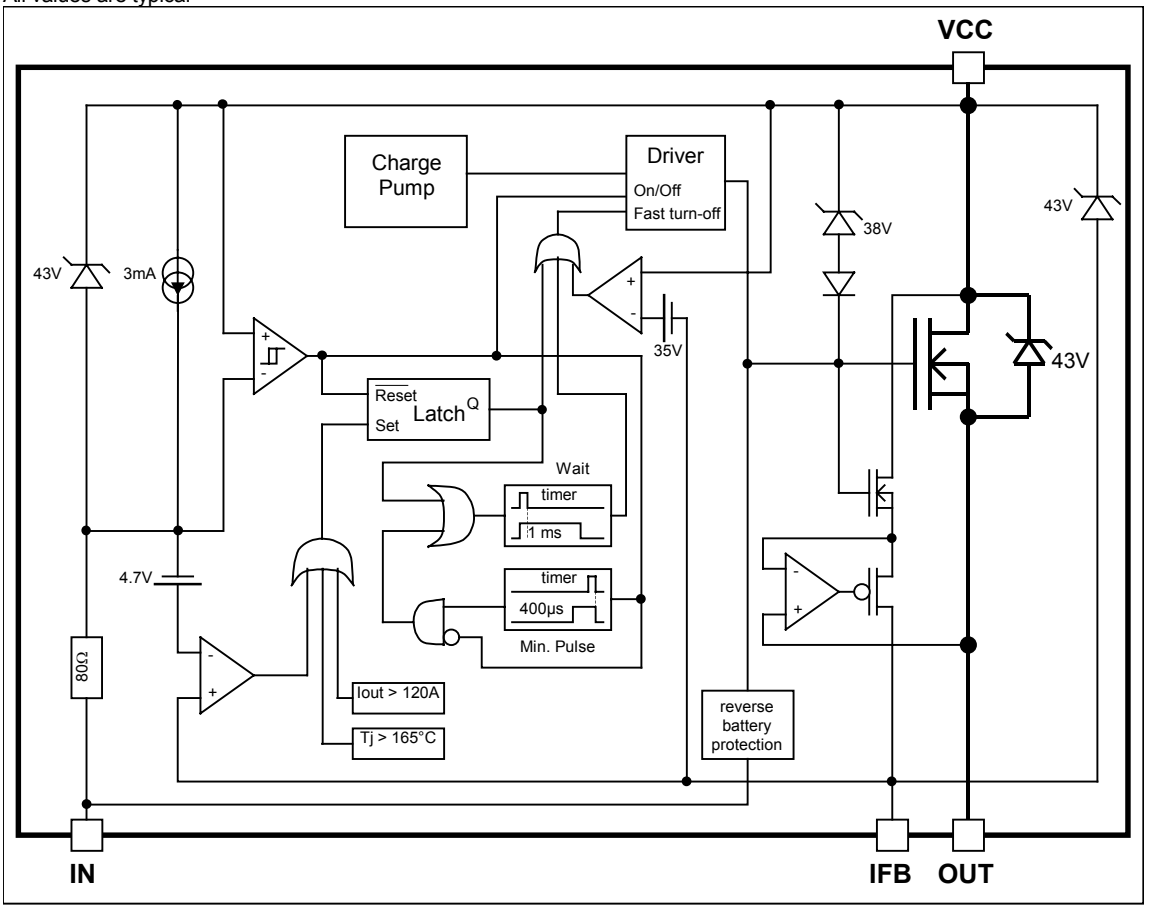

Lead Assignments

1- In
2- Ifb
3- Vcc (tab)
4- Out
5- Out

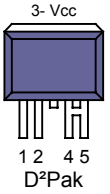

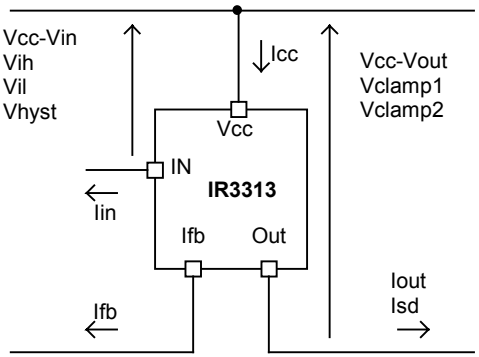

Figure 1 – Voltages and current definitions

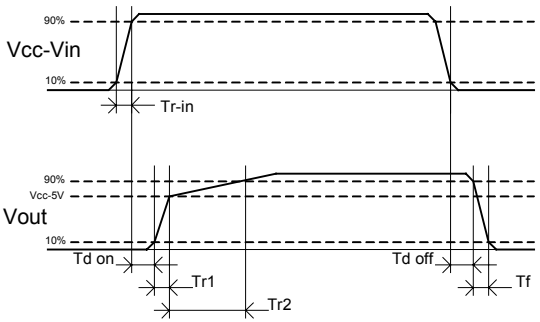

Figure 2 – Switching time definitions

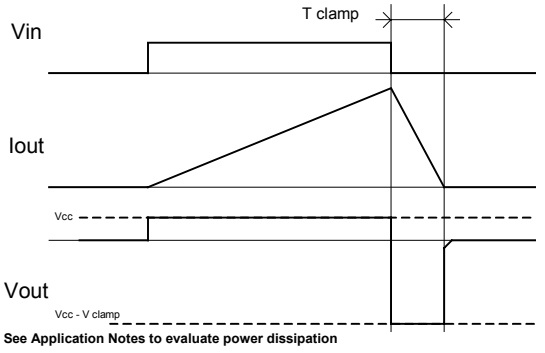

Figure 3 – Active clamp waveforms

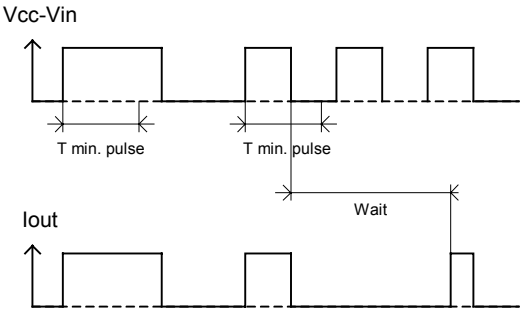

Figure 4 – Min. pulse and Wait function

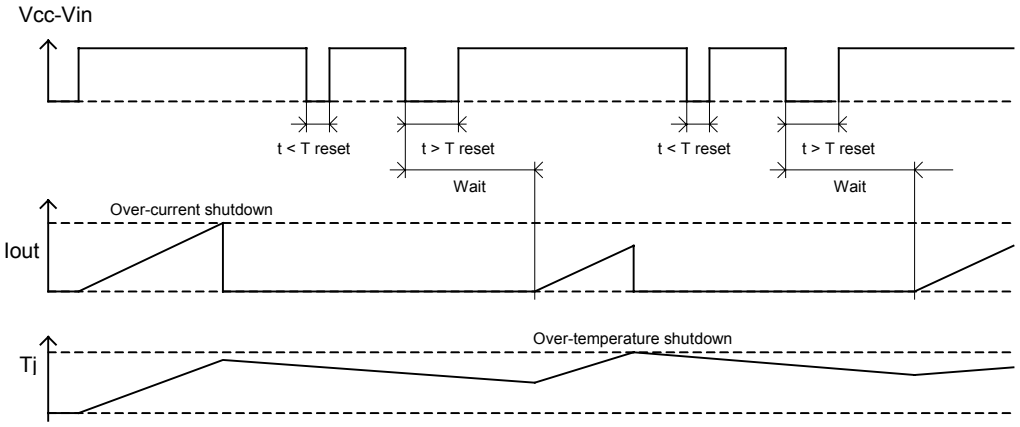

Figure 5 – Protection Timing Diagrams

All curves are typical characteristics. Operation in hatched areas is not recommended. Tj=25°C, Rifb=500ohm, Vcc=14V (unless otherwise specified).

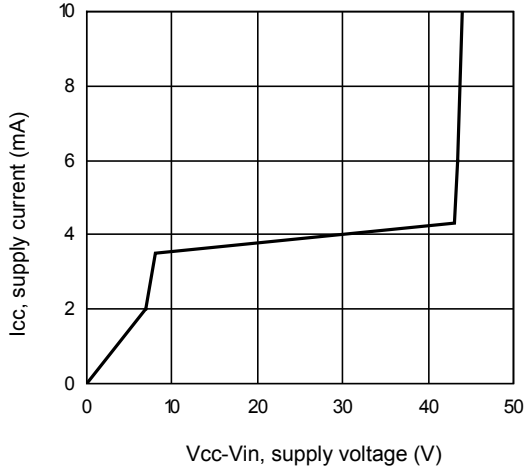

Figure 6 – Icc (mA) Vs Vcc-Vin (V)

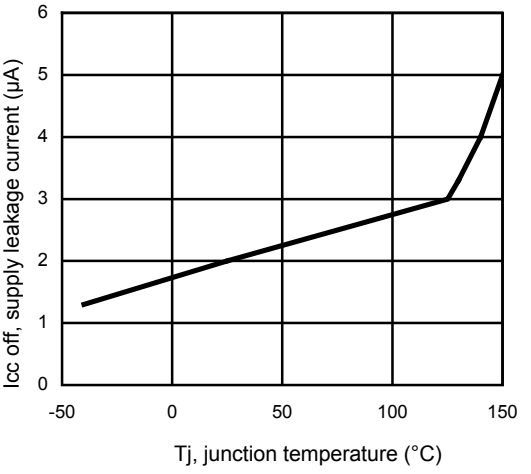

Figure 7 – Icc off (µA) Vs Tj (°C)

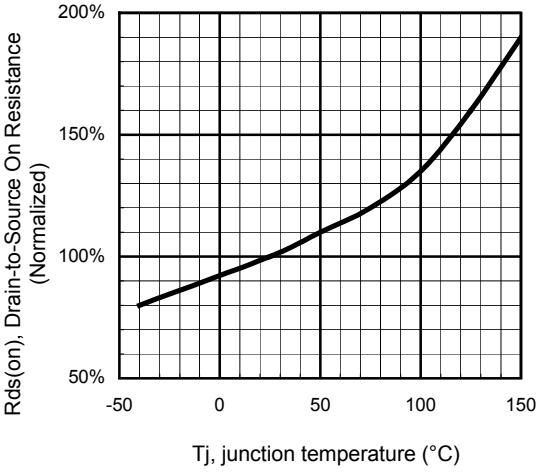

Figure 8 - Normalized Rds(on) (%) Vs Tj (°C)

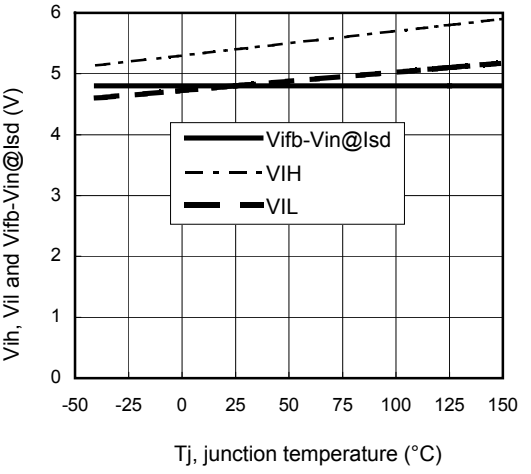

Figure 9 – Vih, Vil and Vifb-Vin@Isd (V) Vs Tj (°C)

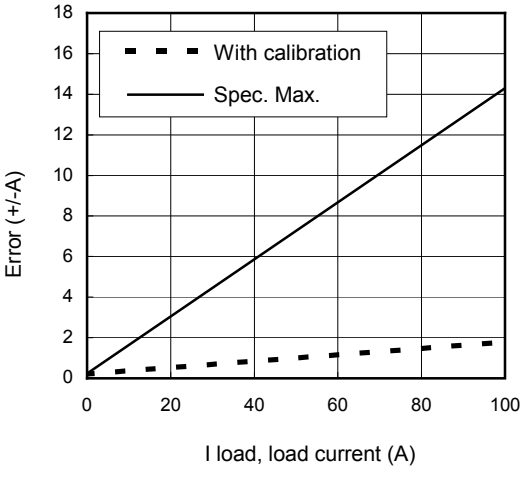

Figure 10 – Error (+/- A) Vs I load (A)

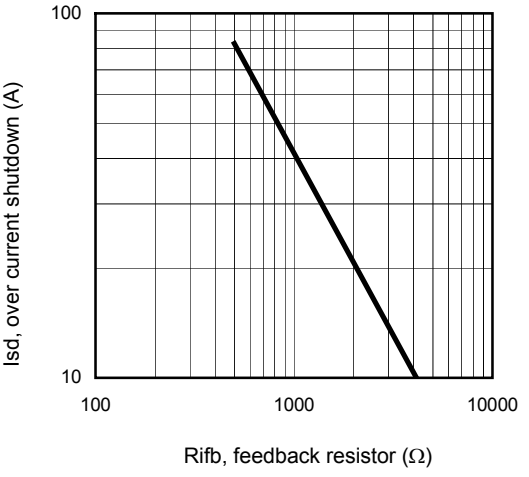

Figure 11 – Ids (A) Vs Rifb (Ω)

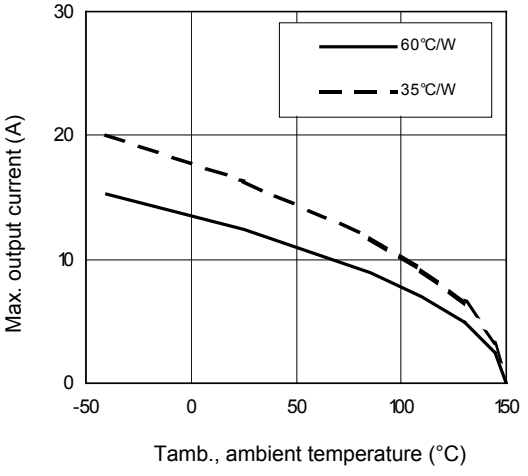

Figure 12 – Max. Iout (A) Vs Tamb. (°C)

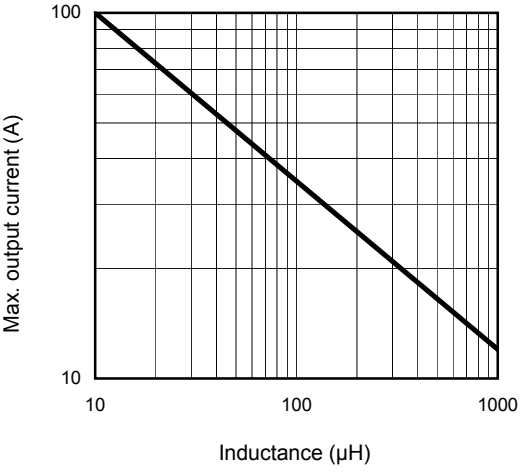

Figure 13 – Max. Iout (A) Vs inductance (µH)

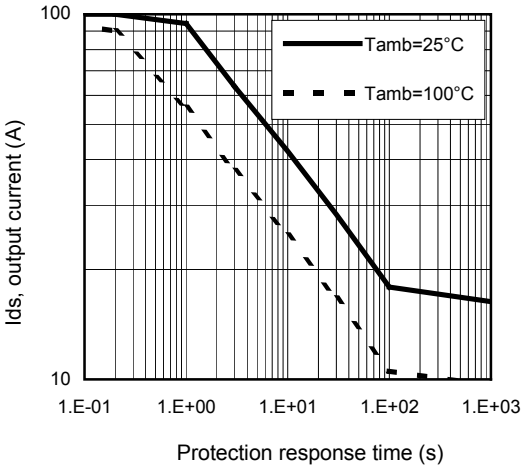

Figure 14 – Ids (A) Vs over temperature protection response time (s)/ Rth=60°C/W

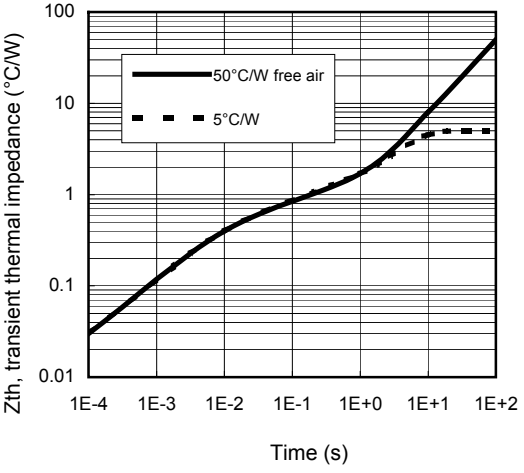

Figure 15 – Transient thermal impedance (°C/W) Vs time (s)

Case Outline 5 Leads - D2PAK – Automotive Q100 PbF MSL1 qualified

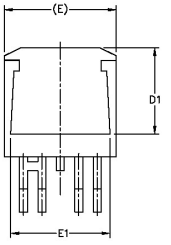

VIEW A–A

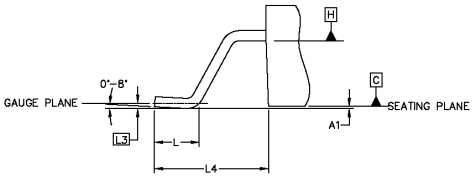

DETAIL "A"
ROTATED 90°
SCALE 8:1

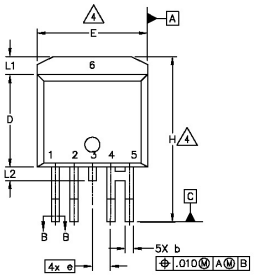

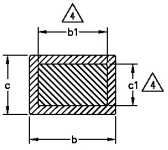

SECTION B–B
SCALE: NONE

SYMBOL	DIMENSIONS				NOTES
	MILLIMETERS		INCHES		
	MIN.	MAX.	MIN.	MAX.	
A	4.06	4.83	.160	.190	
A1		0.254		.010	
b	0.66	0.91	.026	.036	4
b1	0.66	0.81	.026	.032	
c	0.38	0.74	.015	.029	
c1	0.38	0.58	.015	.023	4
c2	1.14	1.65	.045	.065	
D	8.51	9.65	.335	.380	3
D1	6.86		.270		
E	9.65	10.67	.380	.420	3
E1	6.22		.245		
e	1.70 BSC		.067 BSC		
H	14.73	15.49	.580	.609	
L	1.14	1.39	.045	.055	
L1		1.65		.065	
L2	1.27	1.78	.050	.070	
L3	0.25 BSC		.010 BSC		
L4	4.78	5.28	.188	.208	
m	17.78		.700		
m1	8.89		.350		
n	11.43		.450		
o	1.93		.076		
p	3.81		.150		
R	0.51	0.71	.020	.028	

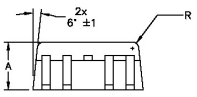

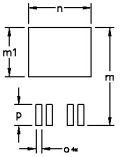

FOOT PRINT
SCALE 2:1

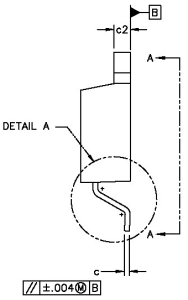

NOTES:

1. DIMENSIONING AND TOLERANCING PER ASME Y14.5M–1994
2. DIMENSIONS ARE SHOWN IN MILLIMETERS [INCHES].
3. DIMENSION D & E DO NOT INCLUDE MOLD FLASH. MOLD FLASH SHALL NOT EXCEED 0.127 [.005"] PER SIDE. THESE DIMENSIONS ARE MEASURED AT THE OUTMOST EXTREMES OF THE PLASTIC BODY.
4. DIMENSION b1 AND c1 APPLY TO BASE METAL ONLY.
5. CONTROLLING DIMENSION: MILLIMETERS
6. LEADS AND DRAIN ARE PLTED WITH 100% Sn

Tape & Reel 5 Lead - D2PAK (SMD220)

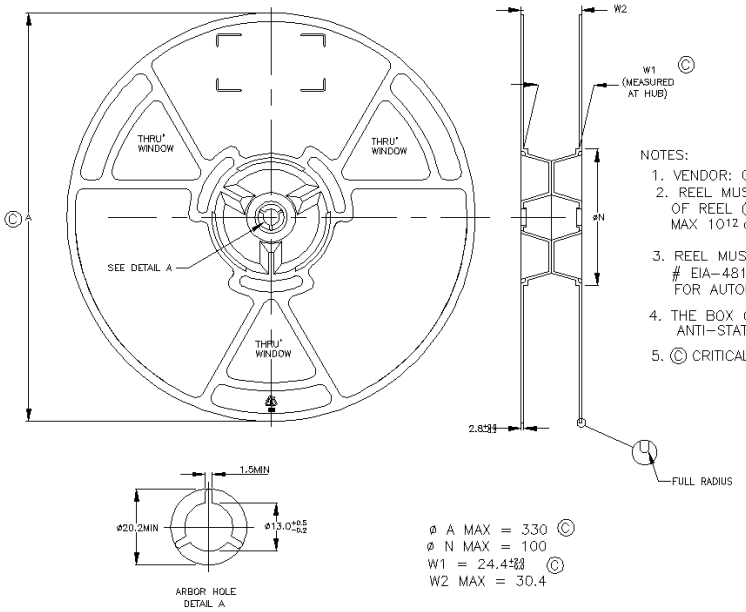

D2Pak is MSL1 qualified.

This product has been designed and qualified for the Automotive [Q100] market.

Qualification standards can be found at www.irf.com

IR WORLD HEADQUARTERS: 233 Kansas St., El Segundo, California 90245 Tel: (310) 252-7105

Data and specifications subject to change without notice. 9/6/2006