Data Sheet No. PD60191 revD

International
IOR Rectifier

IR21091(S) & (PbF)

HALF-BRIDGE DRIVER

Features

- Floating channel designed for bootstrap operation
  Fully operational to +600V
  Tolerant to negative transient voltage
  dV/dt immune
- Gate drive supply range from 10 to 20V
- Undervoltage lockout for both channels
- 3.3V, 5V and 15V input logic compatible
- Cross-conduction prevention logic
- Matched propagation delay for both channels
- High side output in phase with IN input
- Logic and power ground +/- 5V offset.
- Internal 500ns dead-time, and programmable up to 5us with one external R_{DT} resistor
- Lower di/dt gate driver for better noise immunity
- The dual function DT/SD pin input turns off both channels.
- Available in Lead-Free

Product Summary

V_{OFFSET}	600V max.
I_O+/-	120 mA / 250 mA
V_{OUT}	10 - 20V
ton/off (typ.)	680 & 170 ns
Dead time	500 ns
(programmable up to 5uS)	

Packages



8 Lead PDIP

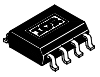

8 Lead SOIC

Description

The IR21091(S) are high voltage, high speed power MOSFET and IGBT drivers with dependant high and low side referenced output channels. Proprietary HVIC and latch immune CMOS technologies enable ruggedized monolithic construction. The logic input is compatible with standard CMOS or LSTTL output, down to 3.3V logic. The output drivers feature a high pulse current buffer stage designed for minimum driver cross-conduction. The floating channel can be used to drive an N-channel power MOSFET or IGBT in the high side configuration which operates up to 600 volts.

Typical Connection

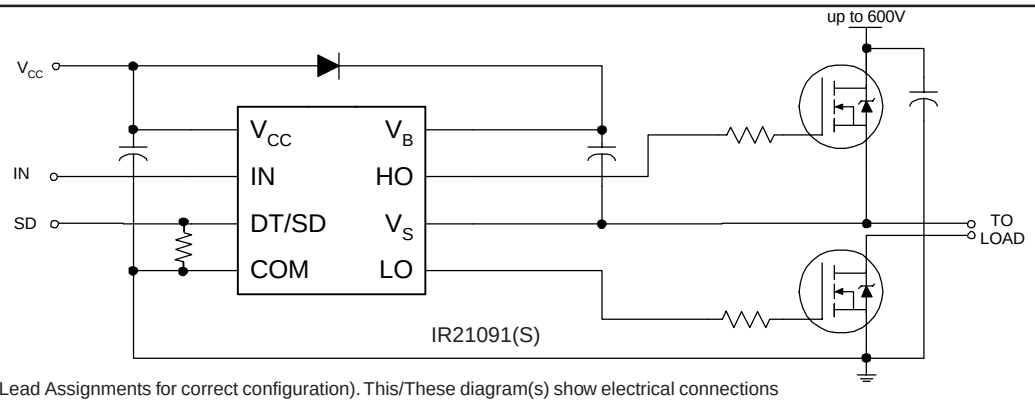

(Refer to Lead Assignments for correct configuration). This/These diagram(s) show electrical connections only. Please refer to our Application Notes and DesignTips for proper circuit board layout.

Absolute Maximum Ratings

Absolute maximum ratings indicate sustained limits beyond which damage to the device may occur. All voltage parameters are absolute voltages referenced to COM. The thermal resistance and power dissipation ratings are measured under board mounted and still air conditions.

Symbol	Definition		Min.	Max.	Units
V_B	High side floating absolute voltage		-0.3	625	V
V_S	High side floating supply offset voltage		V_B - 25	V_B + 0.3	
V_{HO}	High side floating output voltage		V_S - 0.3	V_B + 0.3	
V_{CC}	Low side and logic fixed supply voltage		-0.3	25	
V_{LO}	Low side output voltage		-0.3	V_{CC} + 0.3	
DT/SD	Programmable dead-time and shut-down pin voltage		V_{SS} - 0.3	V_{CC} + 0.3	
V_{IN}	Logic input voltage		V_{SS} - 0.3	V_{CC} + 0.3	
dV_S/dt	Allowable offset supply voltage transient		—	50	V/ns
P_D	Package power dissipation @ $T_A \leq +25°C$	(8 Lead PDIP)	—	1.0	W
		(8 Lead SOIC)	—	0.625	
Rth_{JA}	Thermal resistance, junction to ambient	(8 Lead PDIP)	—	125	°C/W
		(8 Lead SOIC)	—	200	
T_J	Junction temperature		—	150	°C
T_S	Storage temperature		-50	150	
T_L	Lead temperature (soldering, 10 seconds)		—	300	

Recommended Operating Conditions

The input/output logic timing diagram is shown in figure 1. For proper operation the device should be used within the recommended conditions. The V_S offset rating are tested with all supplies biased at 15V differential.

Symbol	Definition	Min.	Max.	Units
VB	High side floating supply absolute voltage	V_S + 10	V_S + 20	V
V_S	High side floating supply offset voltage	Note 1	600	
V_{HO}	High side floating output voltage	V_S	V_B	
V_{CC}	Low side and logic fixed supply voltage	10	20	
V_{LO}	Low side output voltage	0	V_{CC}	
V_{IN}	Logic input voltage	V_{SS}	V_{CC}	
DT/SD	Programmable dead-time and shut-down pin voltage	V_{SS}	V_{CC}	
T_A	Ambient temperature	-40	125	°C

Note 1: Logic operational for V_S of -5 to +600V. Logic state held for V_S of -5V to $-V_{BS}$. (Please refer to the Design Tip DT97-3 for more details).

Dynamic Electrical Characteristics

V_{BIAS} (V_{CC}, V_{BS}) = 15V, C_L = 1000 pF, T_A = 25°C, DT = VSS unless otherwise specified.

Symbol	Definition	Min.	Typ.	Max.	Units	Test Conditions
t_{on}	Turn-on propagation delay	—	750	950	nsec	V_S = 0V
t_{off}	Turn-off propagation delay	—	200	280		V_S = 0V or 600V
MT	Delay matching, HS & LS turn-on/off	—	0	70		
t_r	Turn-on rise time	—	150	220		V_S = 0V
t_f	Turn-off fall time	—	50	80		V_S = 0V
DT	Deadtime: LO turn-off to HO turn-on(DT_{LO-HO}) &	400	540	680		RDT= 0
	HO turn-off to LO turn-on (DT_{HO-LO})	4	5	6	usec	RDT = 200k
MDT	Deadtime matching = $DT_{LO - HO}$ - DT_{HO-LO}	—	0	60	nsec	RDT=0
		—	0	600		RDT = 200k
tsd	Shut down propagation delay	215	—	615		

Static Electrical Characteristics

V_{BIAS} (V_{CC}, V_{BS}) = 15V, DT= V_{SS} and T_A = 25°C unless otherwise specified. The V_{IL}, V_{IH} and I_{IN} parameters are referenced to V_{SS} /COM and are applicable to the respective input leads: IN and DT. The V_O, I_O and Ron parameters are referenced to COM and are applicable to the respective output leads: HO and LO.

Symbol	Definition	Min.	Typ.	Max.	Units	Test Conditions
V_{IH}	Logic “1” input voltage for HO & logic “0” for LO	2.9	—	—	V	V_{CC} = 10V to 20V
V_{IL}	Logic “0” input voltage for HO & logic “1” for LO	—	—	0.8		V_{CC} = 10V to 20V
$V_{SD,TH}$	DT/SD pin shutdown input threshold	11.5	13	14.5		
V_{OH}	High level output voltage, V_{BIAS} - V_O	—	0.8	1.4		I_O = 20 mA
V_{OL}	Low level output voltage, V_O	—	0.3	0.6		I_O = 20 mA
I_{LK}	Offset supply leakage current	—	—	50	µA	V_B = V_S = 600V
I_{QBS}	Quiescent V_{BS} supply current	20	60	150		V_{IN} = 0V or 5V
I_{QCC}	Quiescent V_{CC} supply current	0.4	1.0	1.6	mA	V_{IN} = 0V or 5V RDT = 0
I_{IN+}	Logic “1” input bias current	—	5	20	µA	IN = 5V, SD = 0V
I_{IN-}	Logic “0” input bias current	—	1	2		IN = 0V, $\overline{SD}$ = 5V
V_{CCUV+} V_{BSUV+}	V_{CC} and V_{BS} supply undervoltage positive going threshold	8.0	8.9	9.8	V	
V_{CCUV-} V_{BSUV-}	V_{CC} and V_{BS} supply undervoltage negative going threshold	7.4	8.2	9.0		
V_{CCUVH} V_{BSUVH}	Hysteresis	0.3	0.7	—		
I_{O+}	Output high short circuit pulsed vurrent	120	200	—	mA	V_O = 0V, PW ≤ 10 µs
I_{O-}	Output low short circuit pulsed current	250	350	—		V_O =15V,PW ≤ 10 µs

Functional Block Diagrams

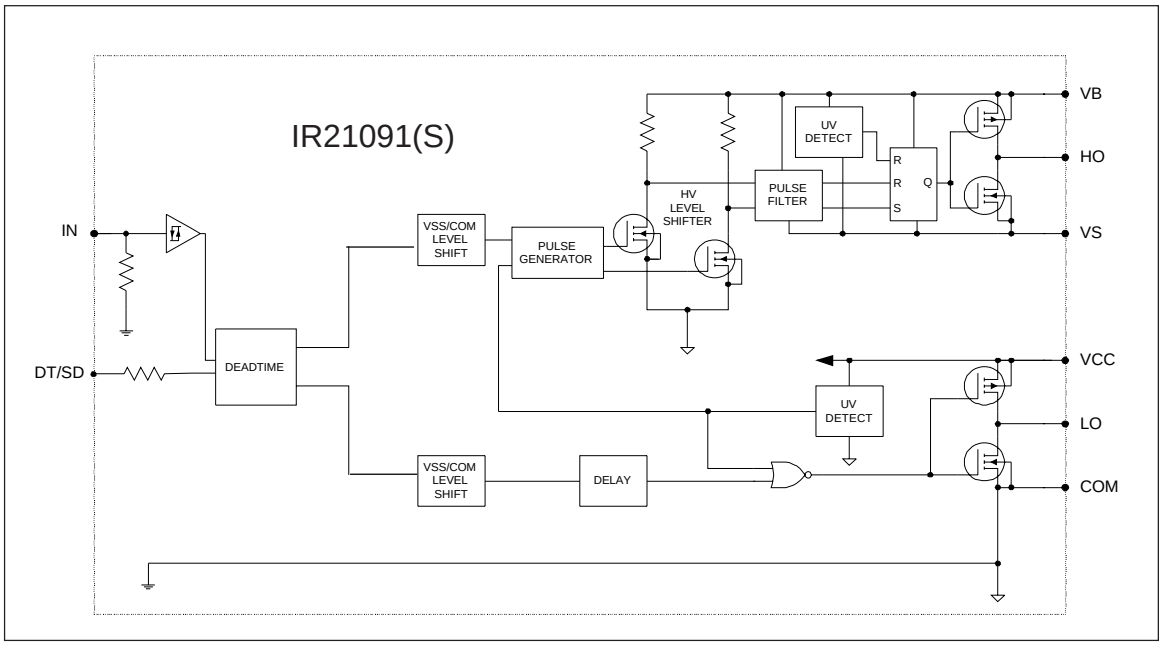

Lead Definitions

Symbol	Description
IN	Logic input for high and low side gate driver outputs (HO and LO), in phase with HO
DT/SD	Programmable dead-time lead, referenced to VSS. Disables input/output logic when tied to VCC
V_B	High side floating supply
HO	High side gate drive output
V_S	High side floating supply return
V_{CC}	Low side and logic fixed supply
LO	Low side gate drive output
COM	Low side return

Lead Assignments

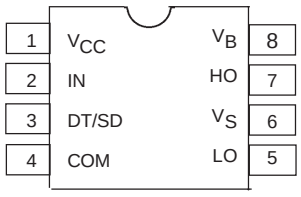

8 Lead PDIP

IR21091

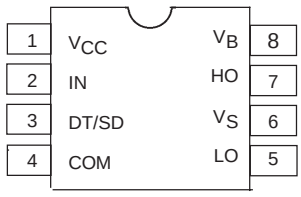

8 Lead SOIC

IR21091(S)

Case Outlines

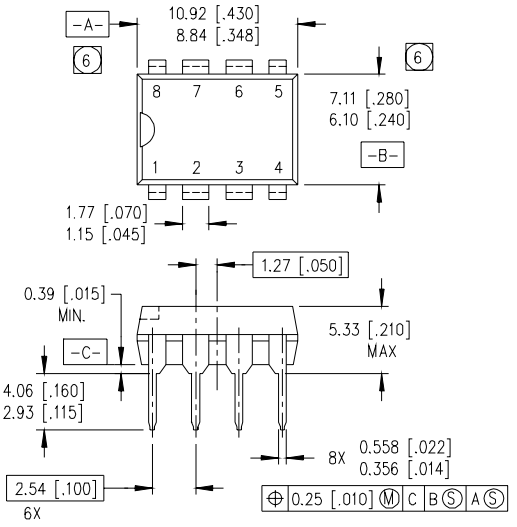

NOTES:
1. DIMENSIONING & TOLERANCING PER ANSI Y14.5M-1982.
2. CONTROLLING DIMENSION: INCH.
3. DIMENSIONS ARE SHOWN IN MILLIMETERS [INCHES].
4. OUTLINE CONFORMS TO JEDEC OUTLINE MS-001AB.
5. MEASURED WITH THE LEADS CONSTRAINED TO BE PERPENDICULAR TO DATUM PLANE C.
6. DIMENSION DOES NOT INCLUDE MOLD PROTUSIONS. MOLD PROTUSIONS SHALL NOT EXCEED 0.25 [.010].

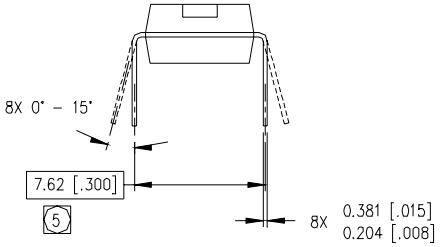

8 Lead PDIP

01-6014
01-3003 01 (MS-001AB)

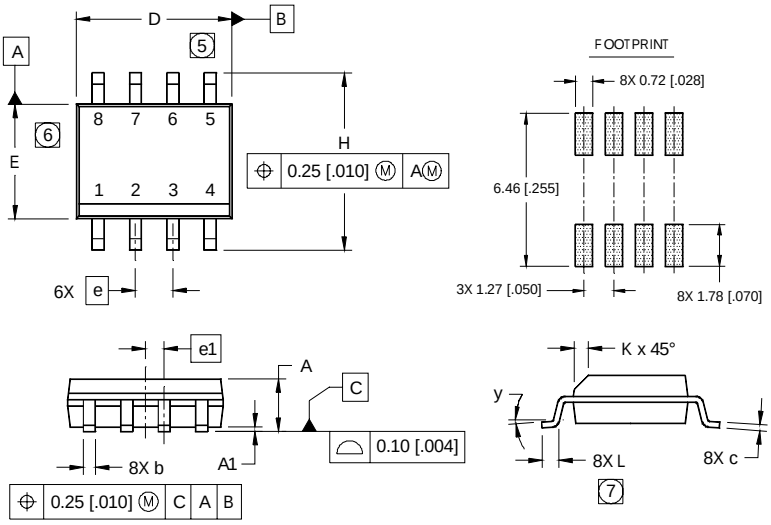

DIM	INCHES		MILLIMETERS	
	MIN	MAX	MIN	MAX
A	.0532	.0688	1.35	1.75
A1	.0040	.0098	0.10	0.25
b	.013	.020	0.33	0.51
c	.0075	.0098	0.19	0.25
D	.189	.1968	4.80	5.00
E	.1497	.1574	3.80	4.00
e	.050 BASIC		1.27 BASIC	
e1	.025 BASIC		0.635 BASIC	
H	.2284	.2440	5.80	6.20
K	.0099	.0196	0.25	0.50
L	.016	.050	0.40	1.27
y	0°	8°	0°	8°

NOTES:
1. DIMENSIONING & TOLERANCING PER ASME Y14.5M-1994.
2. CONTROLLING DIMENSION: MILLIMETER
3. DIMENSIONS ARE SHOWN IN MILLIMETERS [INCHES].
4. OUTLINE CONFORMS TO JEDEC OUTLINE MS-012AA.
5. DIMENSION DOES NOT INCLUDE MOLD PROTRUSIONS. MOLD PROTRUSIONS NOT TO EXCEED 0.15 [.006].
6. DIMENSION DOES NOT INCLUDE MOLD PROTRUSIONS. MOLD PROTRUSIONS NOT TO EXCEED 0.25 [.010].
7. DIMENSION IS THE LENGTH OF LEAD FOR SOLDERING TO A SUBSTRATE.

8 Lead SOIC

01-6027
01-0021 11 (MS-012AA)

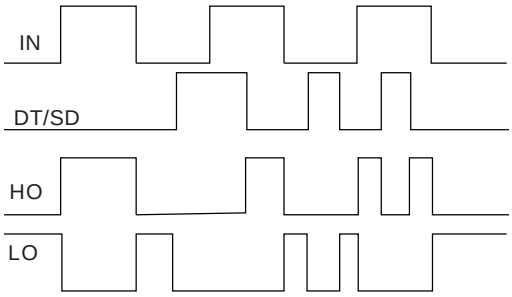

Figure 1. Input/Output Timing Diagram

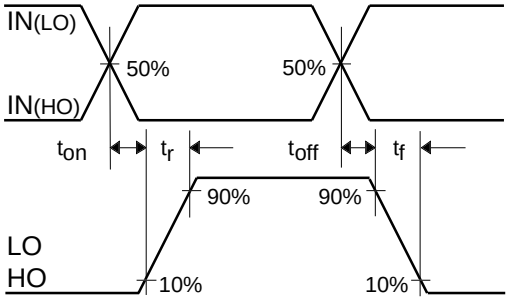

Figure 2. Switching Time Waveform Definitions

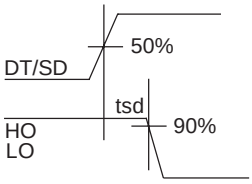

Figure 3. Shutdown Waveform Definitions

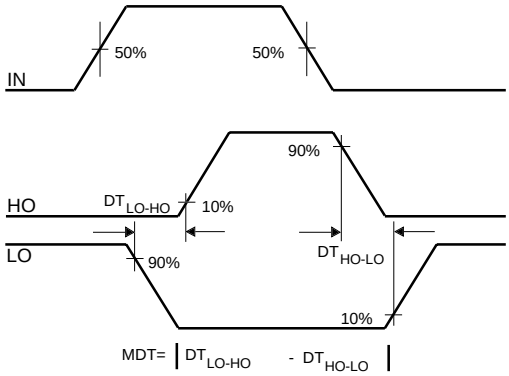

Figure 4. Deadtime Waveform Definitions

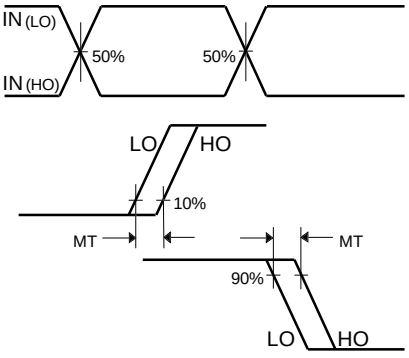

Figure 5. Delay Matching Waveform Definitions

LEADFREE PART MARKING INFORMATION

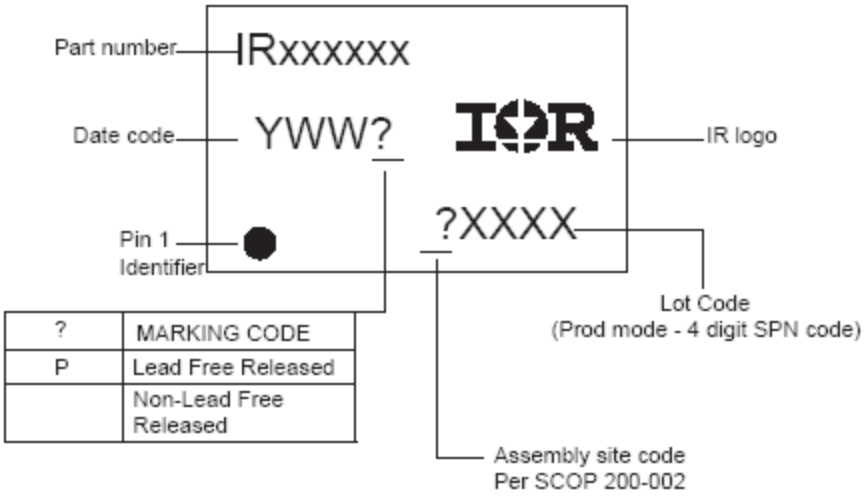

?	MARKING CODE
P	Lead Free Released
	Non-Lead Free Released

Basic Part (Non-Lead Free)

8-Lead PDIP IR21091 order IR21091
8-Lead SOIC IR21091S order IR21091S

Lead-Free Part

8-Lead PDIP IR21091 order IR21091PBF
8-Lead SOIC IR21091S order IR21091SPBF

International
IOR Rectifier

This product has been designed and qualified for the Industrial market.
Qualification Standards can be found on IR's Website.
Data and specifications subject to change without notice.

IR WORLD HEADQUARTERS: 233 Kansas St., El Segundo, California 90245, USA Tel: (310) 252-7105
TAC Fax: (310) 252-7903
Visit us at www.irf.com for sales contact information. 7/19/2005