OptiMOS®2 Power-Transistor

Features

- Ideal for high-frequency dc/dc converters
- Qualified according to JEDEC[1] for target application
- N-channel
- Logic level
- Excellent gate charge x $R_{DS(on)}$ product (FOM)
- Very low on-resistance $R_{DS(on)}$
- Superior thermal resistance
- 175 °C operating temperature
- dv/dt rated

Product Summary

V_{DS}	25	V
$R_{DS(on),max}$ (SMD version)	5.7	mΩ
I_D	50	A

P-TO252-3-11 P-TO251-3-21

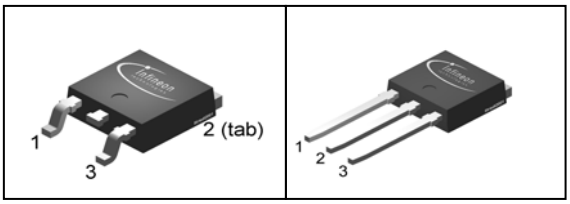

Type	Package	Ordering Code	Marking
IPD06N03LA	P-TO252-3-11	Q67042-S4149	06N03LA
IPU06N03LA	P-TO251-3-21	Q67042-S4145	06N03LA

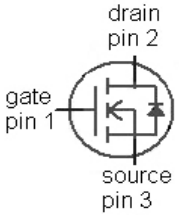

Maximum ratings, at T_j=25 °C, unless otherwise specified

Parameter	Symbol	Conditions	Value	Unit
Continuous drain current	I_D	T_C=25 °C[2]	50	A
		T_C=100 °C	50	
Pulsed drain current	$I_{D,pulse}$	T_C=25 °C[3]	350	
Avalanche energy, single pulse	E_{AS}	I_D=45 A, R_{GS}=25 Ω	225	mJ
Reverse diode dv/dt	dv/dt	I_D=50 A, V_{DS}=20 V, di/dt=200 A/µs, $T_{j,max}$=175 °C	6	kV/µs
Gate source voltage[4]	V_{GS}		±20	V
Power dissipation	P_{tot}	T_C=25 °C	83	W
Operating and storage temperature	T_j, T_{stg}		-55 ... 175	°C
IEC climatic category; DIN IEC 68-1			55/175/56	

[1] J-STD20 and JESD22

Parameter	Symbol	Conditions	Values			Unit
			min.	typ.	max.	
Thermal characteristics						
Thermal resistance, junction - case	R_{thJC}		-	-	1.8	K/W
SMD version, device on PCB	R_{thJA}	minimal footprint	-	-	75	
		6 cm^2 cooling area[5)]	-	-	50	
Electrical characteristics, at T_j=25 °C, unless otherwise specified						
Static characteristics						
Drain-source breakdown voltage	$V_{(BR)DSS}$	V_{GS}=0 V, I_D=1 mA	25	-	-	V
Gate threshold voltage	$V_{GS(th)}$	V_{DS}=V_{GS}, I_D=40 µA	1.2	1.6	2	
Zero gate voltage drain current	I_{DSS}	V_{DS}=25 V, V_{GS}=0 V, T_j=25 °C	-	0.1	1	µA
		V_{DS}=25 V, V_{GS}=0 V, T_j=125 °C	-	10	100	
Gate-source leakage current	I_{GSS}	V_{GS}=20 V, V_{DS}=0 V	-	10	100	nA
Drain-source on-state resistance	$R_{DS(on)}$	V_{GS}=4.5 V, I_D=30 A	-	7.7	9.6	mΩ
		V_{GS}=4.5 V, I_D=30 A, SMD version	-	7.5	9.4	
		V_{GS}=10 V, I_D=30 A	-	5.0	5.9	
		V_{GS}=10 V, I_D=30 A, SMD version	-	4.8	5.7	
Gate resistance	R_G		-	1	-	Ω
Transconductance	g_{fs}	$\|V_{DS}\|>2\|I_D\|R_{DS(on)max}$, I_D=30 A	29	59	-	S

[2)] Current is limited by bondwire; with an R_{thJC}=1.8 K/W the chip is able to carry 94 A.

[3)] See figure 3

[4)] $T_{j,max}$=150 °C and duty cycle D<0.25 for V_{GS}<-5 V

[5)] Device on 40 mm x 40 mm x 1.5 mm epoxy PCB FR4 with 6 cm^2 (one layer, 70 µm thick) copper area for drain connection. PCB is vertical in still air.

Parameter	Symbol	Conditions	Values			Unit
			min.	typ.	max.	
Dynamic characteristics						
Input capacitance	C_{iss}	V_{GS}=0 V, V_{DS}=15 V, f=1 MHz	-	2093	2783	pF
Output capacitance	C_{oss}		-	800	1064	
Reverse transfer capacitance	C_{rss}		-	98	147	
Turn-on delay time	$t_{d(on)}$	V_{DD}=15 V, V_{GS}=10 V, I_D=25 A, R_G=2.7 Ω	-	10	14	ns
Rise time	t_r		-	7	11	
Turn-off delay time	$t_{d(off)}$		-	29	43	
Fall time	t_f		-	5	7	
Gate Charge Characteristics[6)]						
Gate to source charge	Q_{gs}	V_{DD}=15 V, I_D=25 A, V_{GS}=0 to 5 V	-	7	9	nC
Gate charge at threshold	$Q_{g(th)}$		-	3.3	4.5	
Gate to drain charge	Q_{gd}		-	4.6	6.9	
Switching charge	Q_{sw}		-	8	11	
Gate charge total	Q_g		-	17	22	
Gate plateau voltage	$V_{plateau}$		-	3.2	-	V
Gate charge total, sync. FET	$Q_{g(sync)}$	V_{DS}=0.1 V, V_{GS}=0 to 5 V	-	15	20	nC
Output charge	Q_{oss}	V_{DD}=15 V, V_{GS}=0 V	-	17	23	
Reverse Diode						
Diode continous forward current	I_S	T_C=25 °C	-	-	50	A
Diode pulse current	$I_{S,pulse}$		-	-	350	
Diode forward voltage	V_{SD}	V_{GS}=0 V, I_F=50 A, T_j=25 °C	-	0.92	1.2	V
Reverse recovery charge	Q_{rr}	V_R=15 V, I_F=I_S, di_F/dt=400 A/µs	-	-	10	nC

[6)] See figure 16 for gate charge parameter definition

1 Power dissipation

$P_{tot}=f(T_C)$

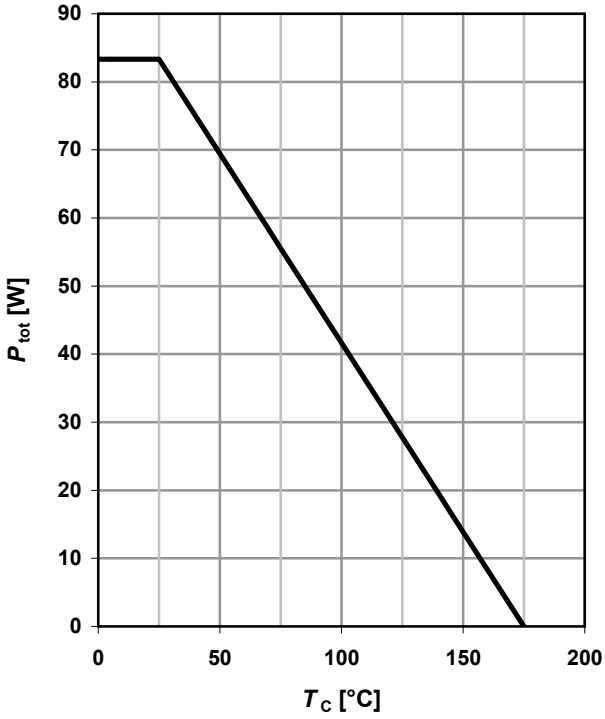

2 Drain current

$I_D=f(T_C)$; $V_{GS}\geq 10$ V

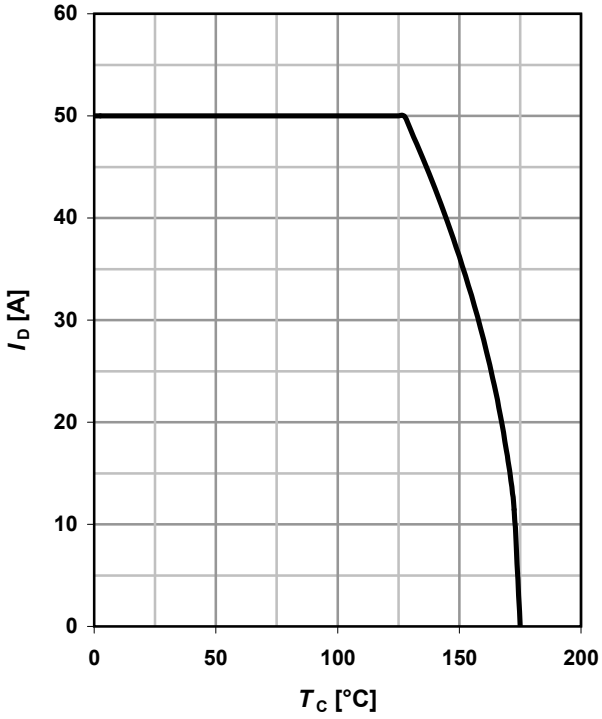

3 Safe operation area

$I_D=f(V_{DS})$; $T_C=25$ °C; $D=0$

parameter: t_p

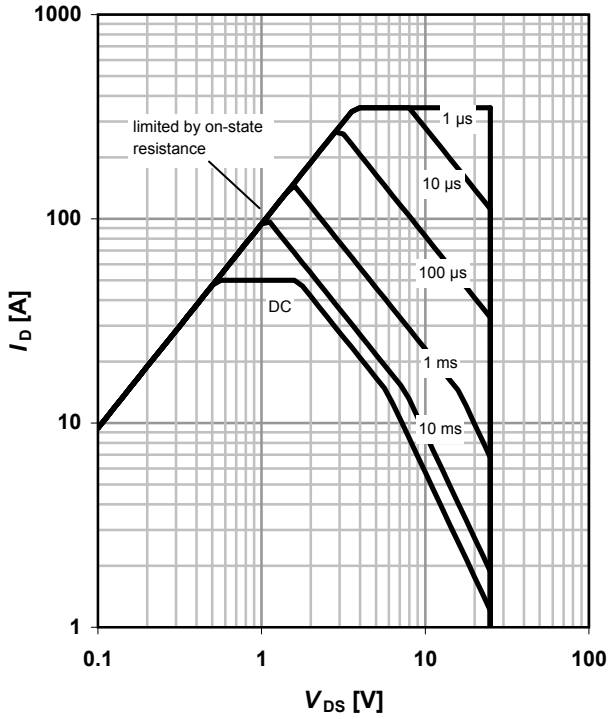

4 Max. transient thermal impedance

$Z_{thJC}=f(t_p)$

parameter: $D=t_p/T$

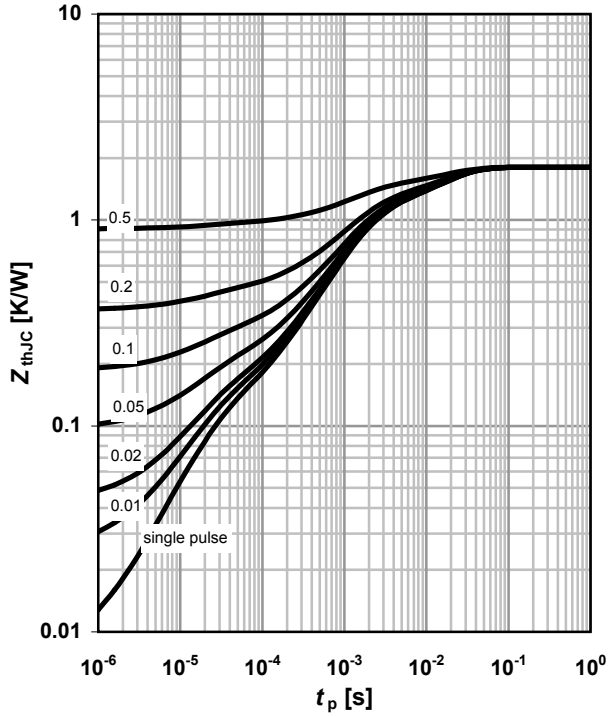

5 Typ. output characteristics

$I_D=f(V_{DS})$; $T_j=25$ °C

parameter: V_{GS}

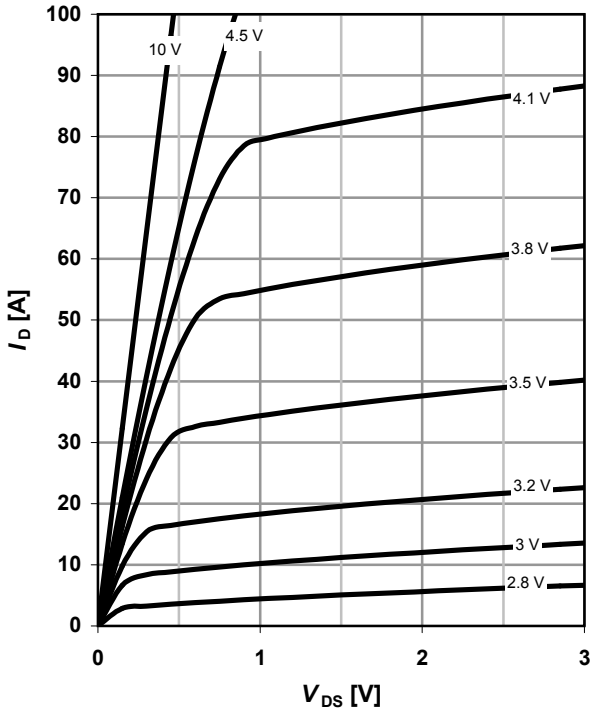

6 Typ. drain-source on resistance

$R_{DS(on)}=f(I_D)$; $T_j=25$ °C

parameter: V_{GS}

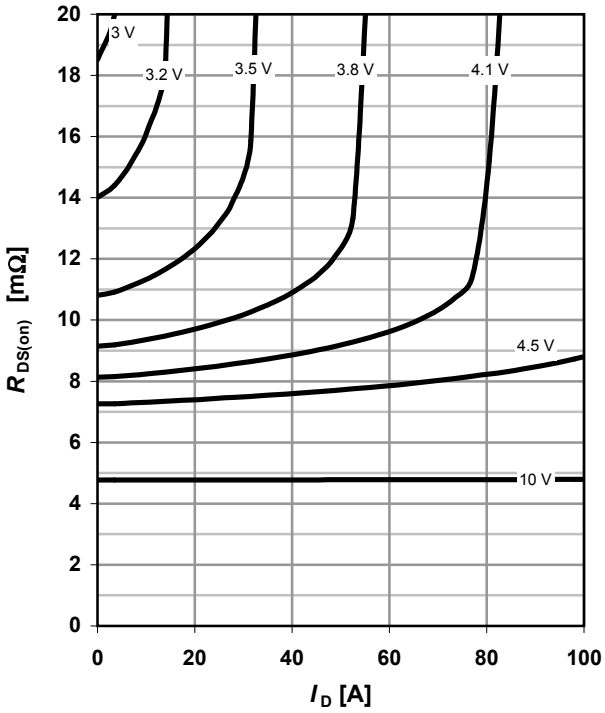

7 Typ. transfer characteristics

$I_D=f(V_{GS})$; $|V_{DS}|>2|I_D|R_{DS(on)max}$

parameter: T_j

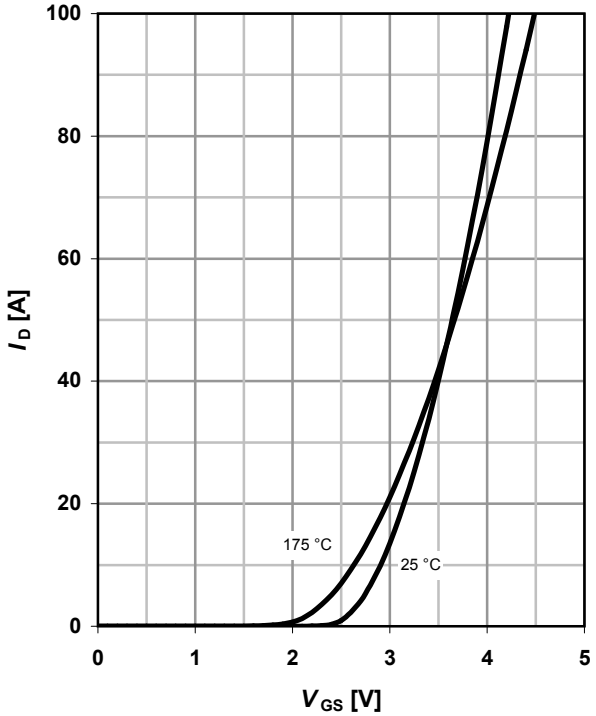

8 Typ. forward transconductance

$g_{fs}=f(I_D)$; $T_j=25$ °C

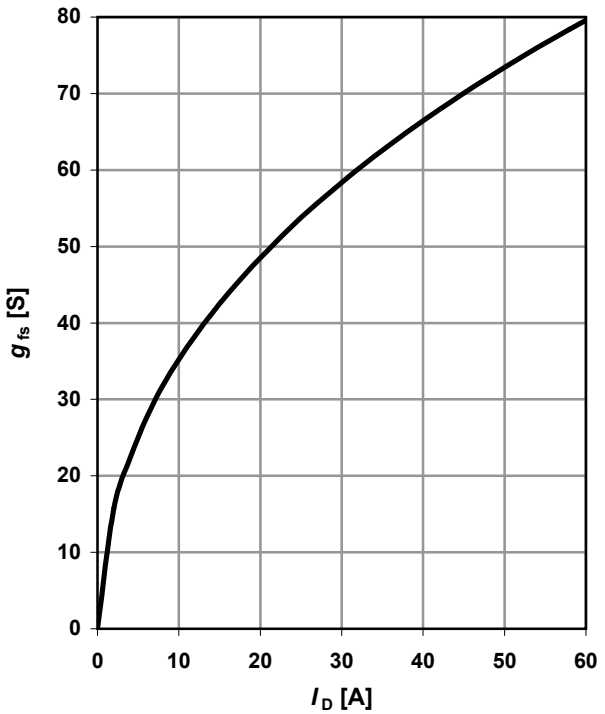

9 Drain-source on-state resistance

$R_{DS(on)}$=f(T_j); I_D=30 A; V_{GS}=10 V

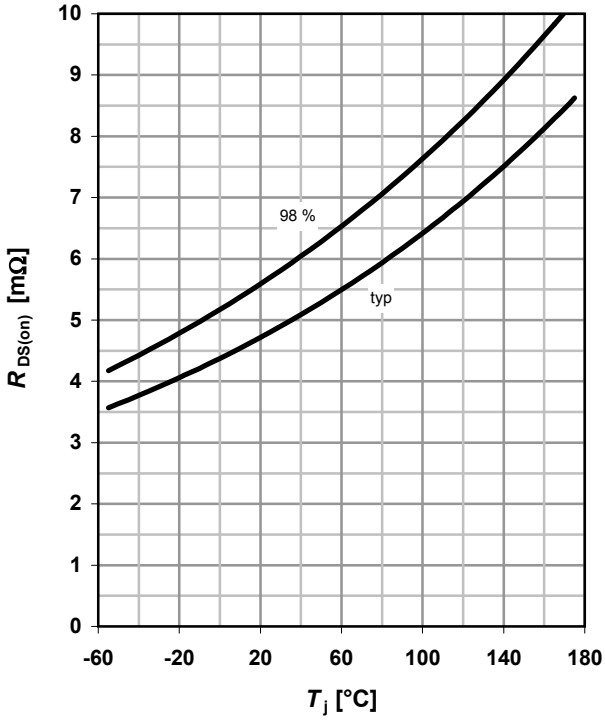

10 Typ. gate threshold voltage

$V_{GS(th)}$=f(T_j); V_{GS}=V_{DS}

parameter: I_D

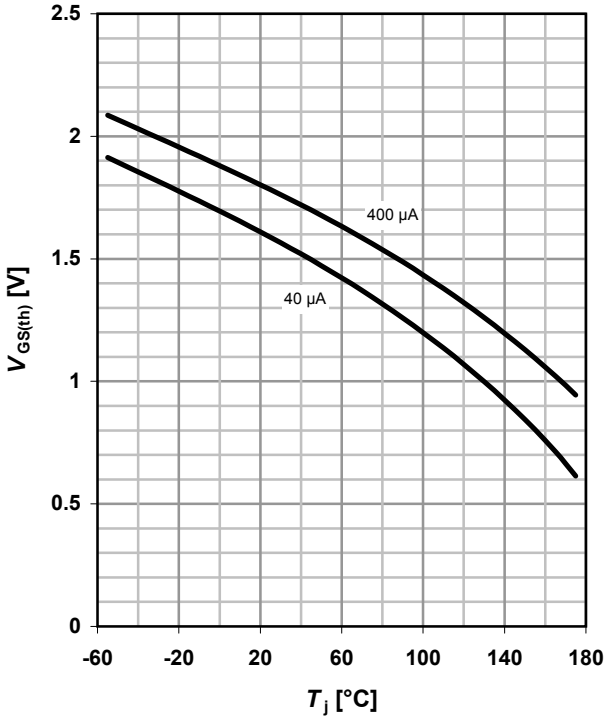

11 Typ. Capacitances

C=f(V_{DS}); V_{GS}=0 V; f=1 MHz

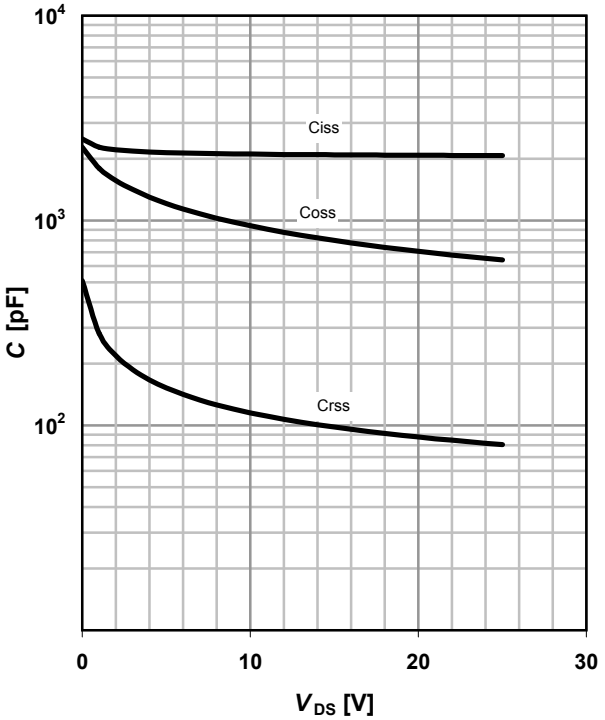

12 Forward characteristics of reverse diode

I_F=f(V_{SD})

parameter: T_j

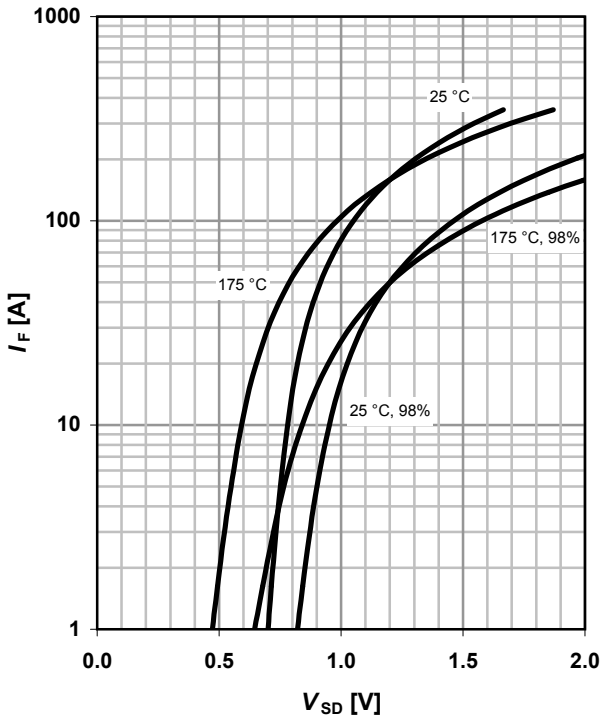

13 Avalanche characteristics

I_{AS}=f(t_{AV}); R_{GS}=25 Ω

parameter: $T_{j(start)}$

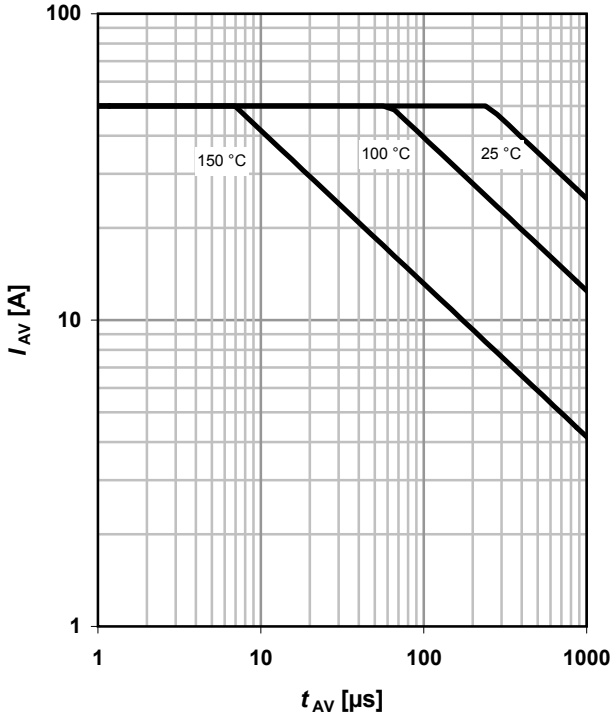

14 Typ. gate charge

V_{GS}=f(Q_{gate}); I_D=25 A pulsed

parameter: V_{DD}

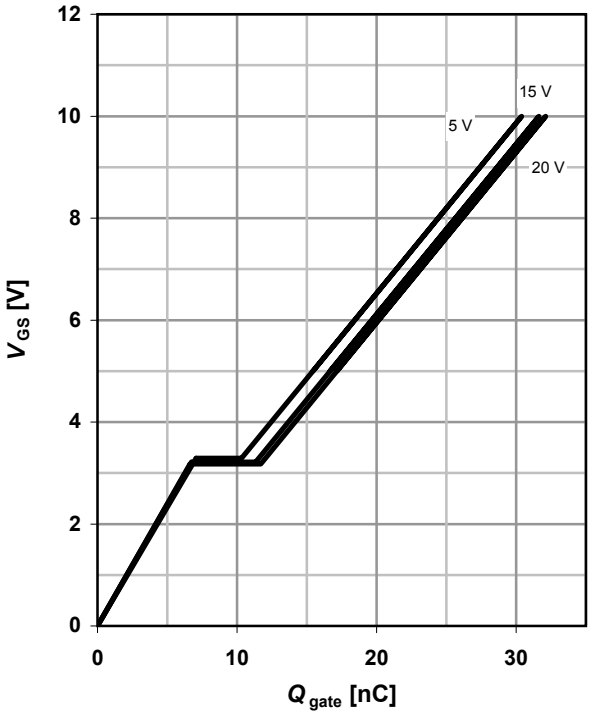

15 Drain-source breakdown voltage

$V_{BR(DSS)}$=f(T_j); I_D=1 mA

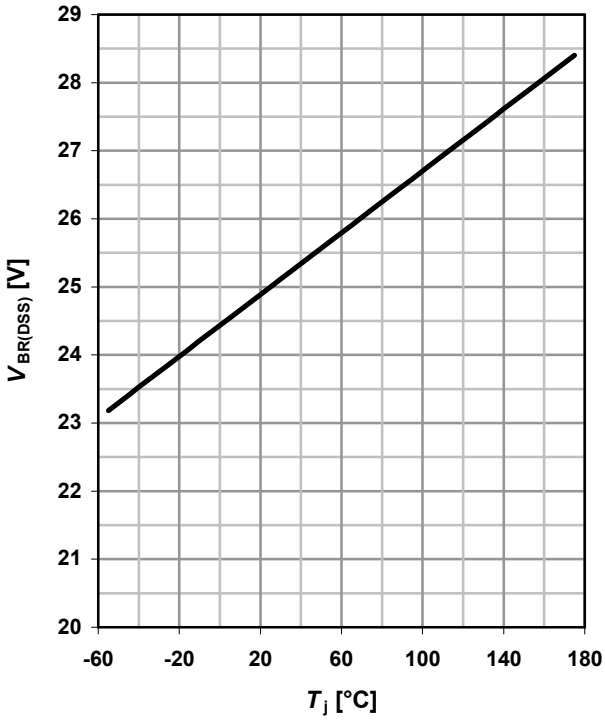

16 Gate charge waveforms

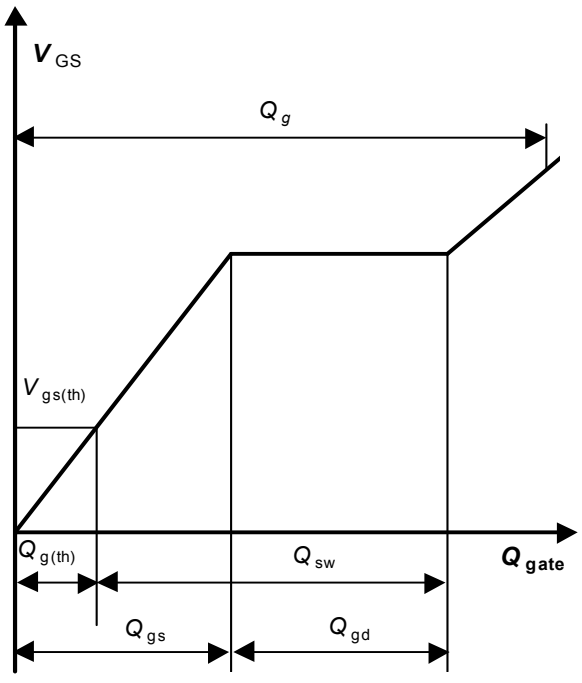

Package Outline

P-TO252-3-11: Outline

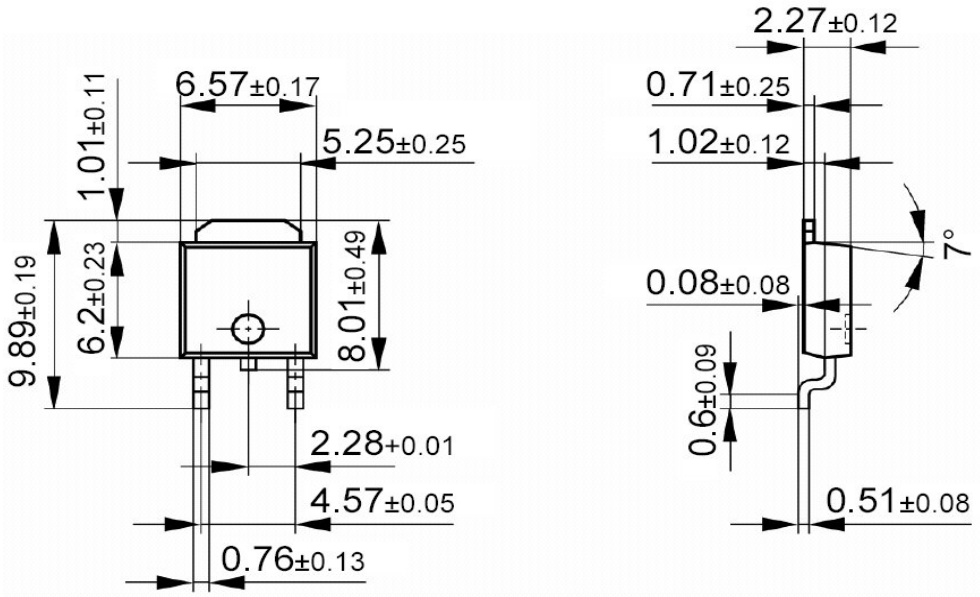

Footprint:

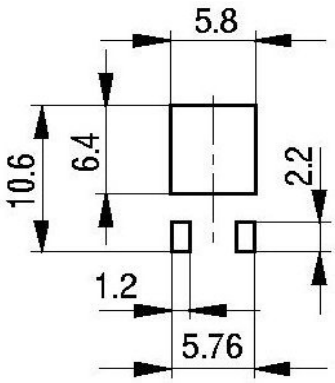

Packaging:

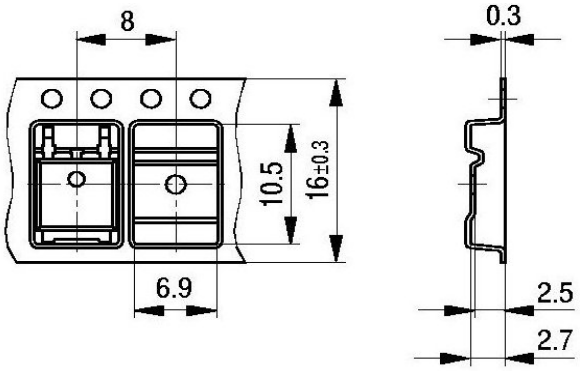

Dimensions in mm

Package Outline

P-TO251-3-21: Outline

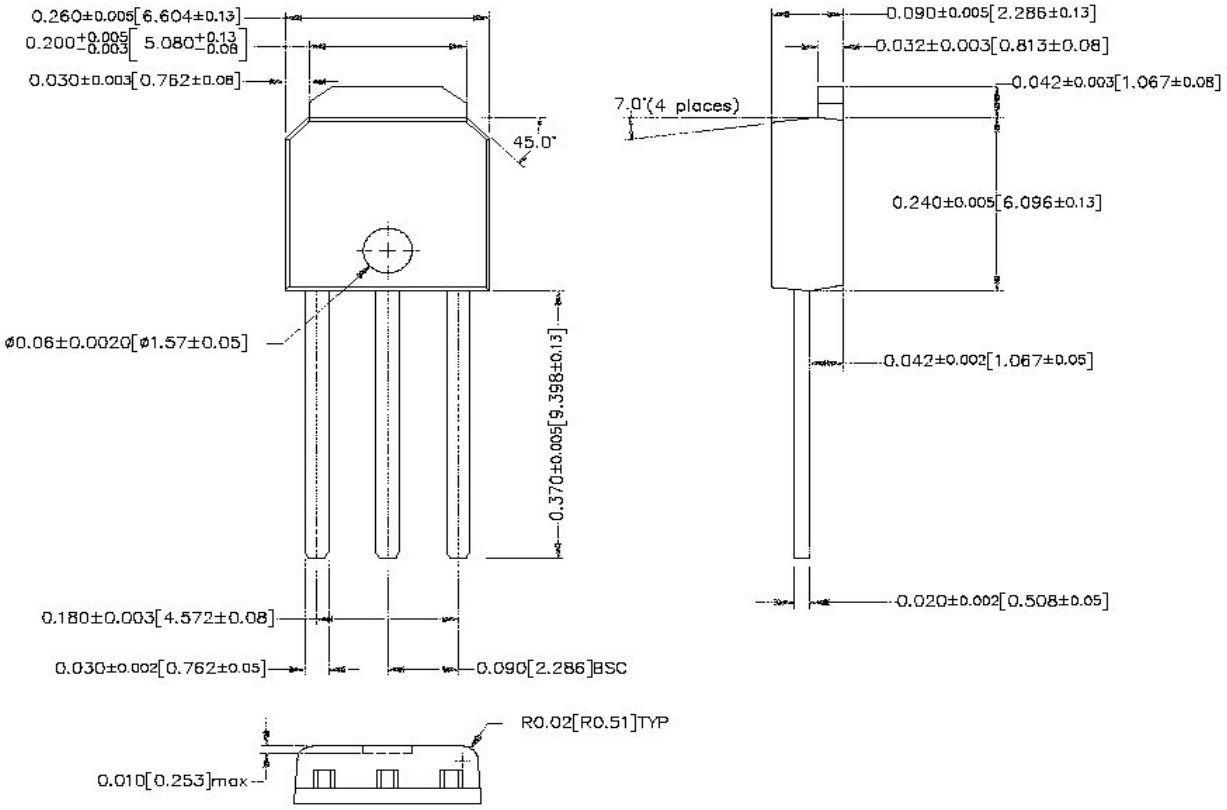

Dimensions in inch [mm]

Published by
Infineon Technologies AG
Bereich Kommunikation
St.-Martin-Straße 53
D-81541 München
© Infineon Technologies AG 1999
All Rights Reserved.

Attention please!
The information herein is given to describe certain components and shall not be considered as warranted characteristics.

Terms of delivery and rights to technical change reserved.

We hereby disclaim any and all warranties, including but not limited to warranties of non-infringement, regarding circuits, descriptions and charts started herein.

Infineon Technologies is an approved CECC manufacturer.

Information
For further information on technology, delivery terms and conditions and prices, please contact your nearest Infineon Technologies office in Germany or our Infineon Technologies representatives worldwide (see address list).

Warnings
Due to technical requirements, components may contain dangerous substances.
For information on the types in question, please contact your nearest Infineon Technologies office.

Infineon Technologies' components may only be used in life-support devices or systems with the expressed written approval of Infineon Technologies if a failure of such components can reasonably be expected to cause the failure of that life-support device or system, or to affect the safety or effectiveness of that device or system. Life support devices or systems are intended to be implanted in the human body, or to support and/or maintain and sustain and/or protect human life. If they fail, it is reasonable to assume that the health of the user or other persons may be endangered.