ADMIRAL CLASS - INTERNATIONAL PRINTED CIRCUIT MOUNT, POWER TRANSFORMER

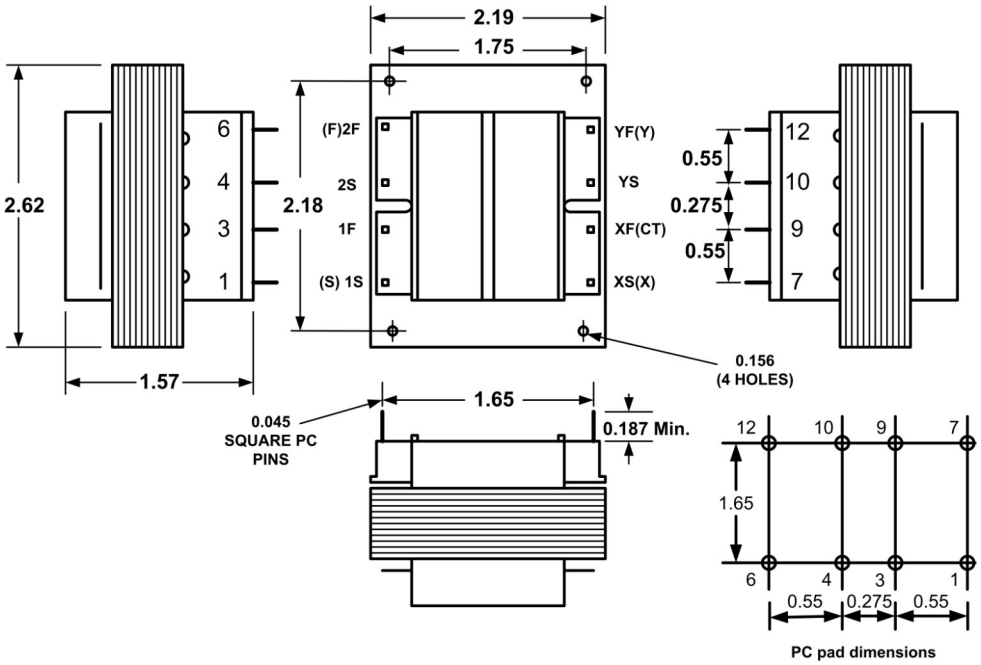

1. Electrical Specifications
   - A. Maximum Power: 30VA
   - B. Input Voltage and Frequency: 115V, 115/230V, 230V 50/60Hz
   - C. Voltage Regulation: 15% TYP @ full load to no load
   - D. Temperature Rise: 40°C TYP
   - E. Insulation Resistance: > 1 MEG ohm
   - F. Hi-Pot: 4000Vrms 1 minute @ Pri to Sec
     4000Vrms 1 minute @ Pri to Core
     4000Vrms 1 minute @ Sec to Core
2. Marking: Ensign Corp, part number (see table), date code
3. Safety:
   UL/cUL 5085-2 Recognized (File 47299)
   UL 60950 Recognized Construction (File E144070)
   VDE 0805 Licensed (File 19019-3336-9002/A1C)
   UL 1446 Recognized Insulation System (File 95662)

Primary Schematics

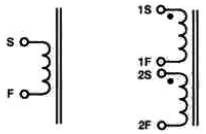

Single Input (Specify 115V, 120V, 230V or 240V)

Dual Input (Specify 115/230V or 120/240V)

Secondary Schematics

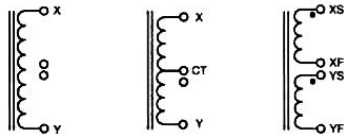

Single Output

Center-Tapped Output

Dual Output

Part Number				
115V	115/230V	230V	Series Connection	Parallel Connection
IP030-1-010X	IP030-2-010X	IP030-3-010X	10VCT @ 3.0A	5V @ 6.0A
IP030-1-012X	IP030-2-012X	IP030-3-012X	12.6VCT @ 2.4A	6.3V @ 4.8A
IP030-1-016X	IP030-2-016X	IP030-3-016X	16VCT @ 1.9A	8V @ 3.8A
IP030-1-020X	IP030-2-020X	IP030-3-020X	20VCT @ 1.5A	10V @ 3.0A
IP030-1-024X	IP030-2-024X	IP030-3-024X	24VCT @ 1.25A	12V @ 2.5A
IP030-1-028X	IP030-2-028X	IP030-3-028X	28VCT @ 1.06A	14V @ 2.12A
IP030-1-036X	IP030-2-036X	IP030-3-036X	36VCT @ 0.82A	18V @ 1.64A

ENSIGN THE FLAGSHIP OF CUSTOM MAGNETICS SINCE 1939	**POWER TRANSFORMER ADMIRAL CLASS**	**IP030-1-XXXX IP030-2-XXXX IP030-3-XXXX**	
CONTENTS OF THIS DRAWING ARE SUBJECT TO CHANGE WITHOUT PRIOR NOTICE	**Ensign Corporation** 201 ENSIGN RD., BELLEVUE, IA 52031	Dim: Inches	Sheet 1 of 1

PROPRIETARY NOTICE: THIS DRAWING PRINT OR DOCUMENT AND SUBJECT MATTER DISCLOSED HEREIN ARE PROPRIETARY ITEMS TO WHICH ENSIGN RETAINS THE EXCLUSIVE RIGHT OF DISSEMINATION, MANUFACTURE AND SALE. THIS DRAWING, PRINT OR DOCUMENT IS SUBMITTED IN CONFIDENCE FOR CONSIDERATION BY THE RECIPIENT ALONE UNLESS PERMISSION FOR FURTHER DISCLOSURE IS EXPRESSLY GRANTED IN WRITING