INA901EVM-CVAL Evaluation Module User's Guide

This user's guide describes the characteristics, operation, and use of the INA901EVM-CVAL evaluation module (EVM). This EVM is designed to evaluate the performance of the INA901-SP voltage-output, current shunt monitor in a variety of configurations. Throughout this document, the terms evaluation board, evaluation module, and EVM are synonymous with the INA901EVM-CVAL. This document also includes a schematic, reference printed-circuit board (PCB) layouts, and a complete bill of materials (BOM).



WARNING

Danger: HIGH VOLTAGE! This evaluation board is intended for professional use only. It has exposed high voltages. Do not operate this board without proper high-voltage/high-current safety practices. Read the *General Texas Instruments High Voltage Evaluation (TI HV EVM) User Safety Guidelines* section before using the EVM.

Copyright © 2018–2020, Texas Instruments Incorporated

Contents

1 General Texas Instruments High Voltage Evaluation (TI HV EVM) User Safety Guidelines 3
2 Overview 4
2.1 INA901-SP Overview 4
2.2 INA901EVM-CVAL Overview 4
2.3 EVM Kit Contents 4
2.4 Related Documentation From Texas Instruments 4
3 Hardware 5
3.1 Features 5
4 Operation 5
4.1 Warnings 5
4.2 Quick Start Setup 5
4.3 Measurements 6
5 EVM Components 10
5.1 Input Current 10
5.2 Input Filter Options 10
5.3 First Order and Sallen Key Filter Options 10
5.4 Comparator 10
5.5 Unused Comparator Channel and Best Practices 10
5.6 Comparator Disconnect 10
6 Schematic, PCB Layout, and Bill of Materials 11
6.1 INA901EVM-CVAL Schematics 11
6.2 PCB Layer Plots 12
6.3 Bill of Materials 16

List of Figures

1 High-Side Setup Using Onboard Shunt Resistor 7
2 High-Side Setup Using An External Shunt Resistor 8
3 Supply Setup for Common and Differential Voltage 9
4 INA901EVM-CVAL Schematic 11
5 INA901EVM-CVAL Top Overlay 12
6 INA901EVM-CVAL Top Copper 13
7 INA901EVM-CVAL Bottom Copper 14
8 INA901EVM-CVAL Bottom Overlay 15

List of Tables

1 INA901EVM-CVAL Kit Contents 4
2 INA901EVM-CVAL Bill of Materials 16

Trademarks

All trademarks are the property of their respective owners.

Copyright © 2018–2020, Texas Instruments Incorporated

1 General Texas Instruments High Voltage Evaluation (TI HV EVM) User Safety Guidelines



Always follow TI's setup and application instructions, including use of all interface components within their recommended electrical rated voltage and power limits. Always use electrical safety precautions to help ensure your personal safety and those working around you. Contact TI's Product Information Center http://support/ti./com for further information.

Save all warnings and instructions for future reference.

WARNING

Failure to follow warnings and instructions may result in personal injury, property damage or death due to electrical shock and burn hazards.

The term TI HV EVM refers to an electronic device typically provided as an open framed, unenclosed printed circuit board assembly. It is *intended strictly for use in development laboratory environments, solely for qualified professional users having training, expertise and knowledge of electrical safety risks in development and application of high voltage electrical circuits. Any other use and/or application are strictly prohibited by Texas Instruments.* If you are not suitable qualified, you should immediately stop from further use of the HV EVM.

1. Work Area Safety
   a. Keep work area clean and orderly.
   b. Qualified observer(s) must be present anytime circuits are energized.
   c. Effective barriers and signage must be present in the area where the TI HV EVM and its interface electronics are energized, indicating operation of accessible high voltages may be present, for the purpose of protecting inadvertent access.
   d. All interface circuits, power supplies, evaluation modules, instruments, meters, scopes and other related apparatus used in a development environment exceeding 50Vrms/75VDC must be electrically located within a protected Emergency Power Off EPO protected power strip.
   e. Use stable and nonconductive work surface.
   f. Use adequately insulated clamps and wires to attach measurement probes and instruments. No freehand testing whenever possible.
2. Electrical Safety
   As a precautionary measure, it is always a good engineering practice to assume that the entire EVM may have fully accessible and active high voltages.
   a. De-energize the TI HV EVM and all its inputs, outputs and electrical loads before performing any electrical or other diagnostic measurements. Revalidate that TI HV EVM power has been safely de-energized.
   b. With the EVM confirmed de-energized, proceed with required electrical circuit configurations, wiring, measurement equipment connection, and other application needs, while still assuming the EVM circuit and measuring instruments are electrically live.
   c. After EVM readiness is complete, energize the EVM as intended.

WARNING

While the EVM is energized, never touch the EVM or its electrical circuits, as they could be at high voltages capable of causing electrical shock hazard.

Copyright © 2018–2020, Texas Instruments Incorporated

3. Personal Safety
   a. Wear personal protective equipment (for example, latex gloves or safety glasses with side shields) or protect EVM in an adequate lucent plastic box with interlocks to protect from accidental touch.

Limitation for safe use:

EVMs are not to be used as all or part of a production unit.

2 Overview

2.1 INA901-SP Overview

The INA901-SP is a space-grade, radiation-hardness-assured (RHA) current-sense amplifier. It can sense drops across shunt resistors at common-mode voltages from –15 V to +65 V, independent of the supply voltage. The INA901-SP operates from a single +2.7-V to +16-V supply, drawing 700 μA (typical) of supply current. The voltage output has a gain of 20 V/V with a typical gain error of ±0.2%. The device is specified over the extended operating temperature range of –55°C to +125°C, QML-V qualified and is offered in an 8-pin CFP package.

2.2 INA901EVM-CVAL Overview

The INA901EVM-CVAL is designed to demonstrate the functionality and performance of the INA901-SP. The board contains a footprint for a size 2512 surface mount shunt resistor. It can also be operated with an external shunt resistor or by simply applying differential voltages to the inputs.

The board also comes equipped with a space-grade LM193AJRLQMLV-SP dual comparator, which is used to configure the EVM as an over current detector.

2.3 EVM Kit Contents

Table 1 summarizes the contents of the INA901EVM-CVAL kit. Contact the Texas Instruments Product Information Center nearest you if any component is missing. TI also recommends checking the INA901 device product folder at www.ti.com for any further information regarding this product.

Table 1. INA901EVM-CVAL Kit Contents

Item	Item Part Number	Quantity
INA901EVM-CVAL Test Board	INA901EVM-CVAL	1

2.4 Related Documentation From Texas Instruments

This document provides information regarding Texas Instruments' integrated circuits used in the assembly of the INA901EVM-CVAL.

Document	Literature Number
INA901 Product Data Sheet	SBOS938

Copyright © 2018–2020, Texas Instruments Incorporated

3 Hardware

The EVM is user configurable so that a wide range of operating conditions and filtering options can be demonstrated. The board also contains an LM193AJRLQMLV-SP space-grade comparator so that the EVM can be evaluated as an overcurrent detector. The board can support –15-V to 65-V common-mode signal on the inputs, and a 10-A load current with a user installed shunt resistor.

3.1 Features

- Flexible input connections, including both onboard and external shunt
- Ease of access to device pins with test points
- Onboard comparator for out-of-box overcurrent detection
- Footprints for optional filtering at the input pins

4 Operation

4.1 Warnings

4.1.1 High Voltage

The common-mode voltage rating of the INA901-SP and the INA901EVM-CVAL is –15 V to 65 V. When using the device and EVM under such circumstances, all proper safety practices must be followed. Do not apply less than –15 V or more than 65 V.

4.1.2 High Current

An unpopulated footprint is provided for the user to install an onboard shunt resistor. The shunt resistor traces have a maximum current rating of 10 A. Ensure that the power rating of the resistor is sufficient for the application.

4.1.3 Board Component Grades

All components on this board are intended for evaluation purposes only and not for flight.

4.2 Quick Start Setup

Follow these procedures to set up and use the INA901EVM-CVAL:

Step 1. Connect the positive lead of an external DC supply voltage to J2 (V+), and connect the ground reference of that supply to J3 (GND). Set the supply for 5 V. Ensure this supply is turned off for now.

Step 2. Ensure the shorting plug is populated at J5. Alternatively, a separate pullup voltage can be applied to the comparator. To do this, depopulate the shorting plug at J5, and apply the desired voltage to J6 (V_PULLUP).

Step 3. Provide a differential input voltage signal to the IN+ and IN– nodes by connecting the signal leads to the positive and negative terminals of J1 on the EVM, respectively, as explained in Section 4.3.

Copyright © 2018–2020, Texas Instruments Incorporated

4.3 Measurements

WARNING



CAUTION HOT SURFACE! If measuring current, first make sure that the equipment (shunt resistor, wires, connectors, and so on) can support the amperage and power dissipation. Secondly, make sure that the current flowing through J1 does not exceed 10 A. Failure to do so can result in hot surfaces (> 55°C), damage to the EVM, or personal injury.

The shunt resistor will become hot during use. Ensure proper precautions are taken to prevent contact with R1 during operation. Failure to do so can result in personal injury.

Copyright © 2018–2020, Texas Instruments Incorporated

To configure the EVM using an onboard shunt resistor, follow this procedure:

Step 1. Solder a size 2512 resistor at the pads of R1. Ensure the area is clean of flux, and the chosen resistor is thermally capable of the desired use case.

Step 2. Connect the positive and negative terminals of J1 in series with the load and bus voltage sources while powered off. You will need to ensure proper logical order to test either the high-side, or low-side application. See *TI Precision Labs - Current Sense Amplifiers: Design Considerations* for additional information on proper application and orientation. Figure 1 shows the correct connections for a high-side application using this method.

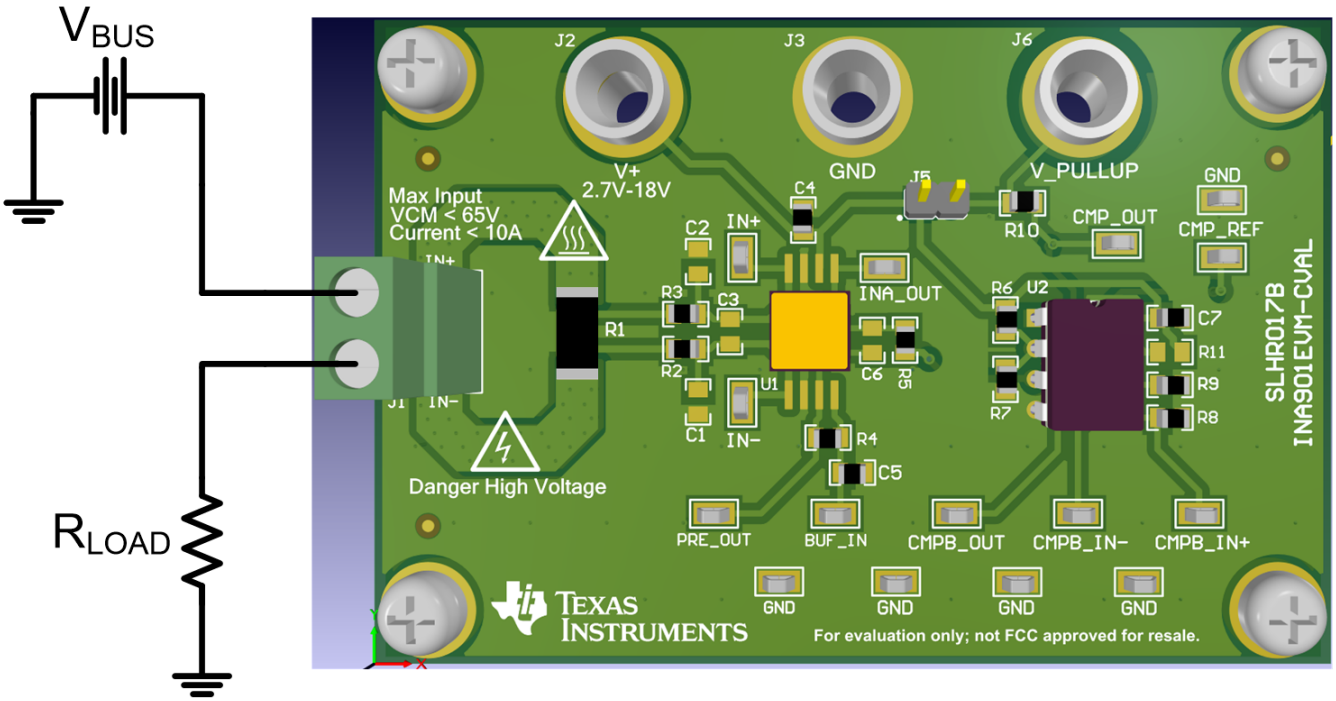

Figure 1. High-Side Setup Using Onboard Shunt Resistor

Step 3. Power on all supplies.

Step 4. Measure the output voltage at INA_OUT with respect to GND.

Step 5. Observe the overcurrent trigger: Using either a DMM or oscilloscope, measure the voltage at CMP_OUT. Slowly increase the magnitude of the load current until it measures > 125 mV. Observe the comparator output change states.

Copyright © 2018–2020, Texas Instruments Incorporated

To configure the EVM using an external shunt resistor, follow this procedure:

Step 1. Choose an external shunt for the desired use case. Ensure the chosen resistor is thermally capable of the desired use case.

Step 2. Connect the positive and negative terminals of J1 with the load and bus voltage sources while powered off. Figure 2 shows the correct connections for a high-side application using this method. Ensure that you make the connections such that the sensing location is directly across the shunt, and there will be no high current on the sensing path. See *TI Precision Labs - Current Sense Amplifiers: Shunt Resistor Layout* for additional information.

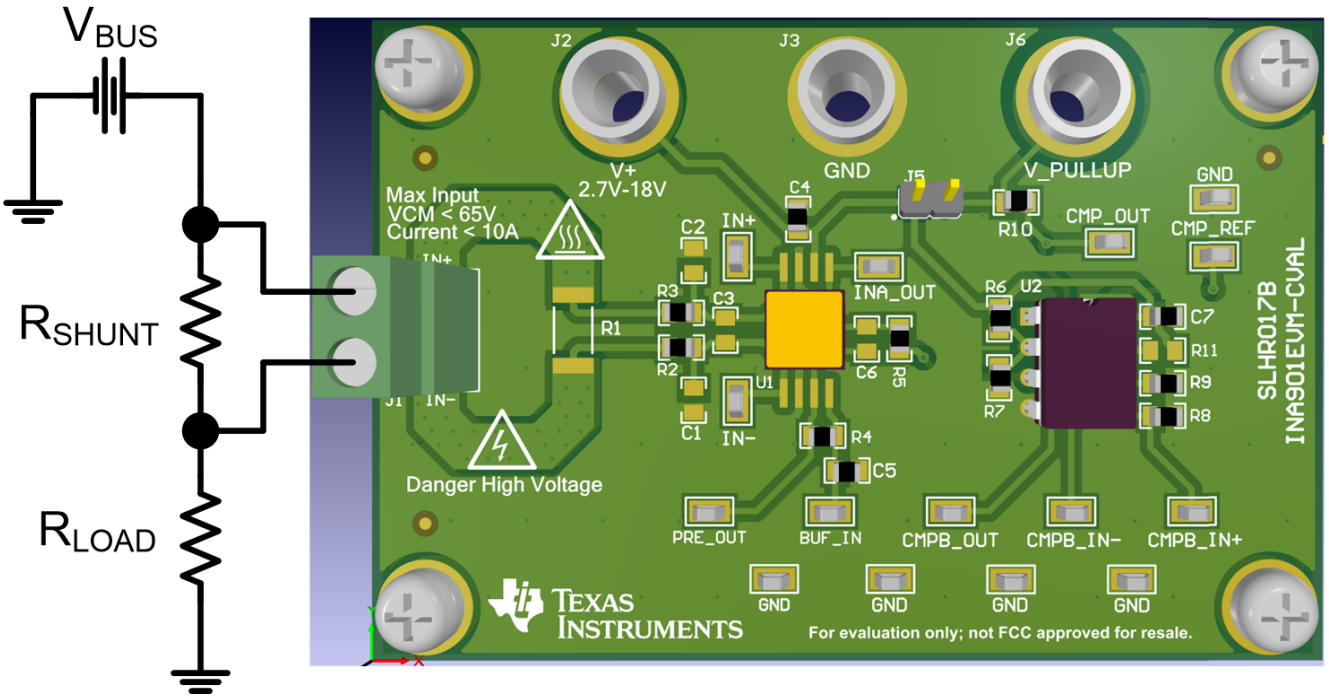

Figure 2. High-Side Setup Using An External Shunt Resistor

Step 3. Power on all supplies.

Step 4. Measure the output voltage at INA_OUT with respect to GND using a DMM.

Step 5. Observe the overcurrent trigger: Using either a DMM or oscilloscope, measure the voltage at CMP_OUT. Slowly increase the magnitude of the load current until it measures > 125 mV. Observe the comparator output change states.

Copyright © 2018–2020, Texas Instruments Incorporated

To configure the EVM to evaluate a specific voltage use case, follow this procedure:

Step 1. Set the differential voltage: Connect an unpowered positive differential voltage across the positive and negative terminals of J1. Given the internal GND reference of the device, make sure that the IN+ pin is the more positive of the two inputs.

Step 2. Set the common mode voltage: to evaluate at a specific common mode, connect an unpowered –15-V to 65-V voltage supply to the inputs by connecting the positive lead of the external voltage source to the negative terminal of J1, and negative lead to a GND test point. This action effectively raises the absolute common-mode voltage of the input pins, while still retaining a positive input differential signal. Figure 3 shows how this supply setup should look when this is done. Ensure that the supplies used to perform this are able to withstand the voltages present before using this method.

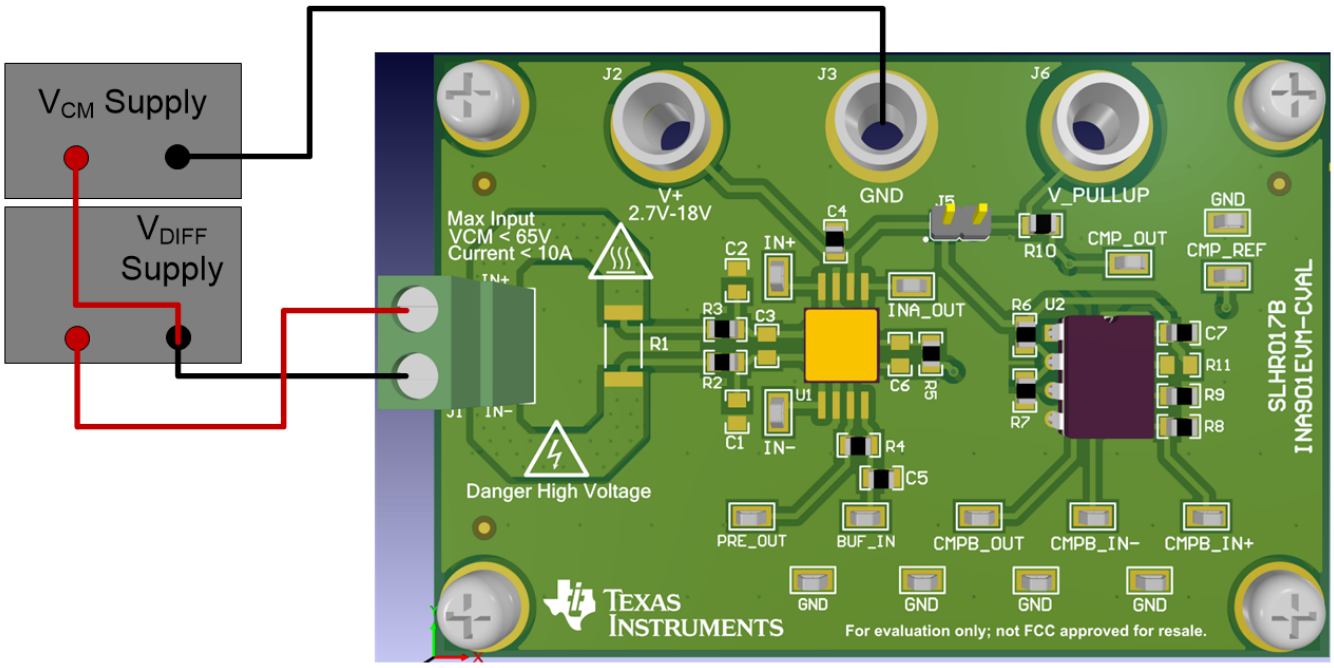

Figure 3. Supply Setup for Common and Differential Voltage

Step 3. Power on all supplies.

Step 4. Measure the output voltage at INA_OUT with respect to GND using a DMM.

Step 5. Observe the overcurrent trigger: Using either a DMM or oscilloscope, measure the voltage at CMP_OUT. Slowly increase the magnitude of the load current until it measures > 125 mV. Observe the comparator output change states.

Copyright © 2018–2020, Texas Instruments Incorporated

5 EVM Components

This section summarizes the INA901EVM-CVAL components.

5.1 Input Current

J1 is the primary input terminal of the INA901EVM-CVAL. This terminal allows the EVM to be placed in series with a bus voltage and load current. R1 is able to be fitted with a size 2512 resistor in this use case. Alternatively, a differential voltage is able to be applied directly across the terminals of J1 to evaluate the EVM.

5.2 Input Filter Options

Resistors R2 and R3, along with capacitor C3, form an optional filter on the inputs of the device. By default, R2 and R3 are populated with 0-Ω resistors, and C3 is not populated. If this filter is populated, use resistance of less than 10 Ω to minimize the introduction of additional errors.

C1 and C2 serve as additional options for common mode filtering on each input if desired. C1 and C2 are not populated by default.

5.3 First Order and Sallen Key Filter Options

C5 is populated by default with a 15-pF capacitor which, along with the internal 96-kΩ resistor at the PRE OUT pin of U1, forms a first-order filter between the PRE OUT and BUF IN stages of U1.

By default, C6 is not populated, and R4 is populated with a 0-Ω resistor. These values may be changed along with C5 to form a second order Sallen-Key filter. See the *Device Functional Modes* section of the *INA901-SP Radiation Hardened, –15-V to 65-V Common Mode Unidirectional Current-Shunt Monitor Data Sheet* for additional information on how to configure this.

5.4 Comparator

The "A" channel of comparator U2 is configured by default as an overcurrent detector. Resistors R6 and R7 are configured by default so that the comparator reference is ½ of V+. As V+ also sets the full scale output range of the INA901, this sets the overcurrent point of the comparator to ½ of the full scale output range of the INA901, or when V_{SENSE} > 125 mV for a supply voltage of 5 V. This set point can be changed by adjusting the values of R6 and R7.

5.5 Unused Comparator Channel and Best Practices

The "B" channel of comparator U2 is unused by default. Resistors R8, R9, and R11 are configured in accordance with the *Unused Comparator Connections* section of the *Application Design Guidelines for LM339, LM393, TL331 Family Comparators Including the New B-versions Application Report*.

5.6 Comparator Disconnect

If the INA901 needs to be evaluated without other devices present, R5 can be depopulated to disconnect the INA901 from the comparator.

Copyright © 2018–2020, Texas Instruments Incorporated

6 Schematic, PCB Layout, and Bill of Materials

NOTE: Board layouts are not to scale. These figures are intended to show how the board is laid out; they are not intended to be used for manufacturing INA293EVM PCBs.

6.1 INA901EVM-CVAL Schematics

Figure 4 illustrates the EVM schematic.

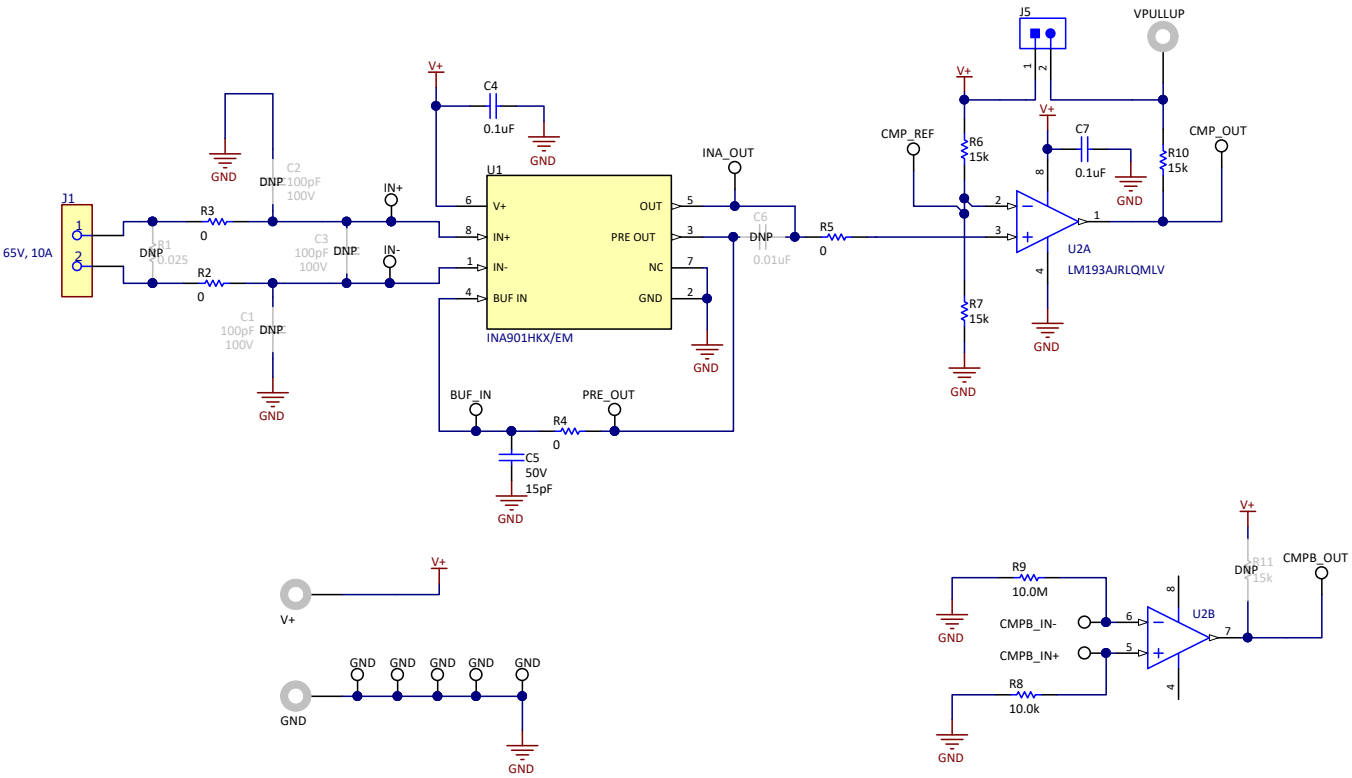

Figure 4. INA901EVM-CVAL Schematic

Copyright © 2018–2020, Texas Instruments Incorporated

6.2 PCB Layer Plots

Figure 5 through Figure 8 illustrate the INA901EVM-CVAL PCB layouts.

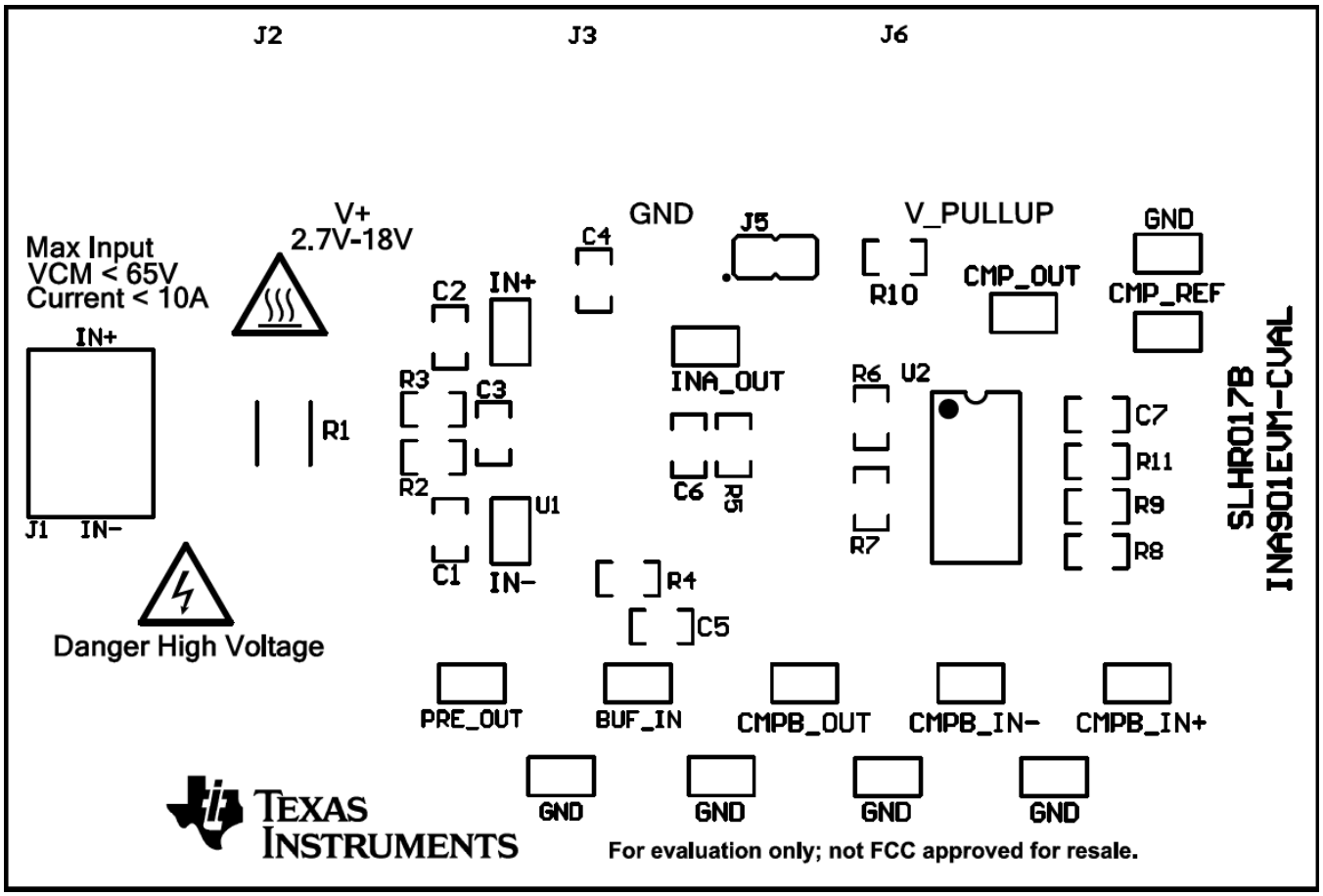

Figure 5. INA901EVM-CVAL Top Overlay

Copyright © 2018–2020, Texas Instruments Incorporated

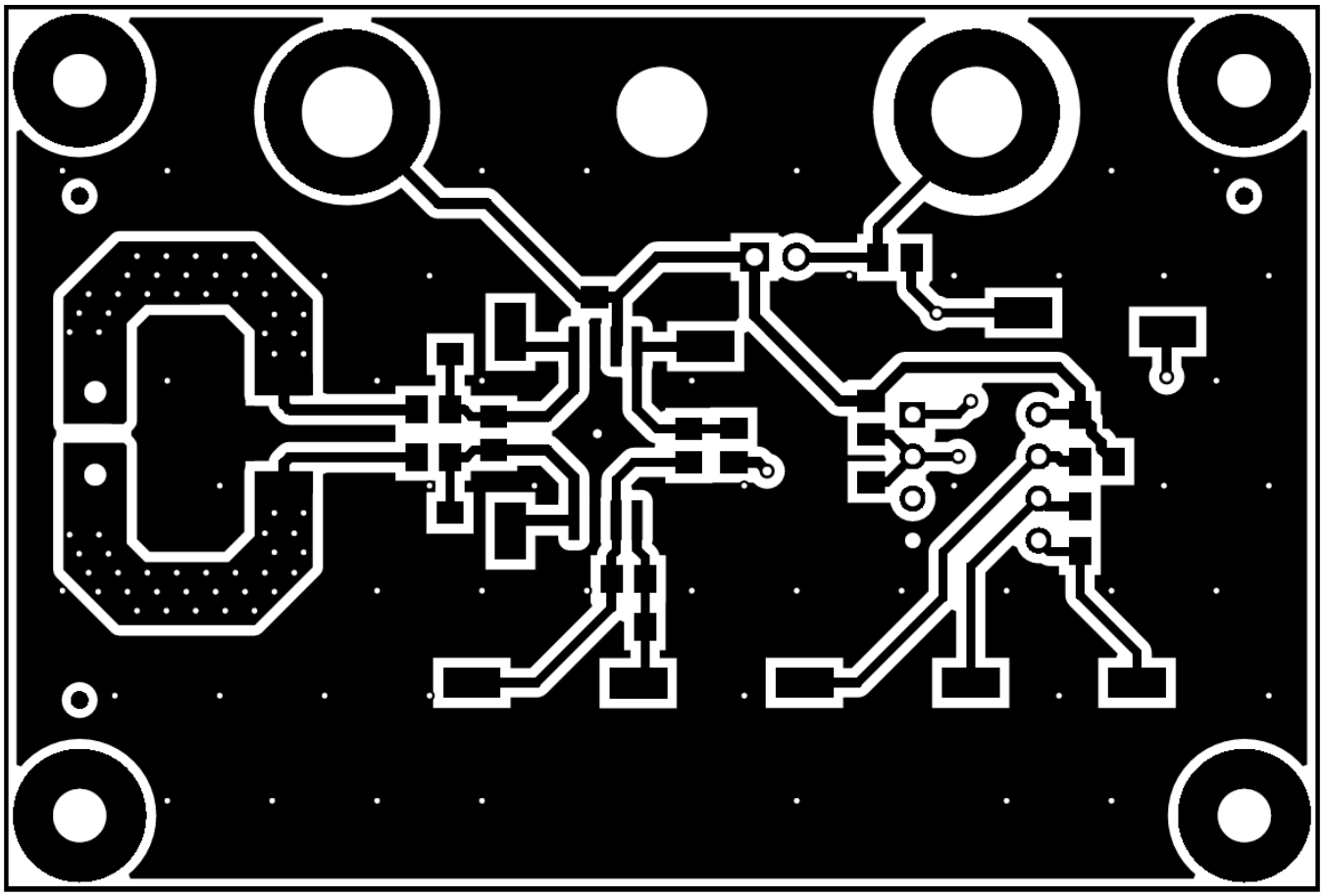

Figure 6. INA901EVM-CVAL Top Copper

Copyright © 2018–2020, Texas Instruments Incorporated

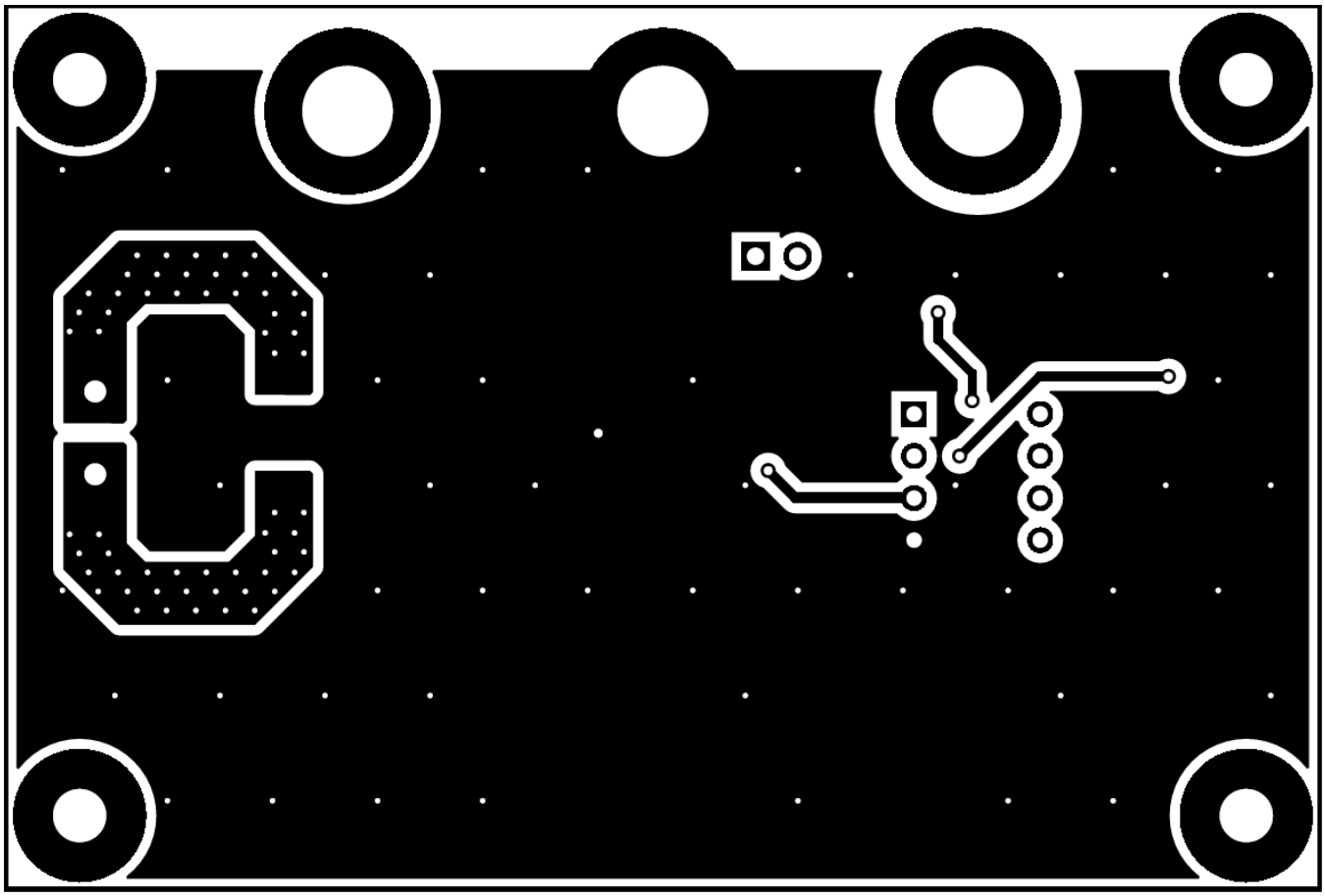

Figure 7. INA901EVM-CVAL Bottom Copper

Copyright © 2018–2020, Texas Instruments Incorporated

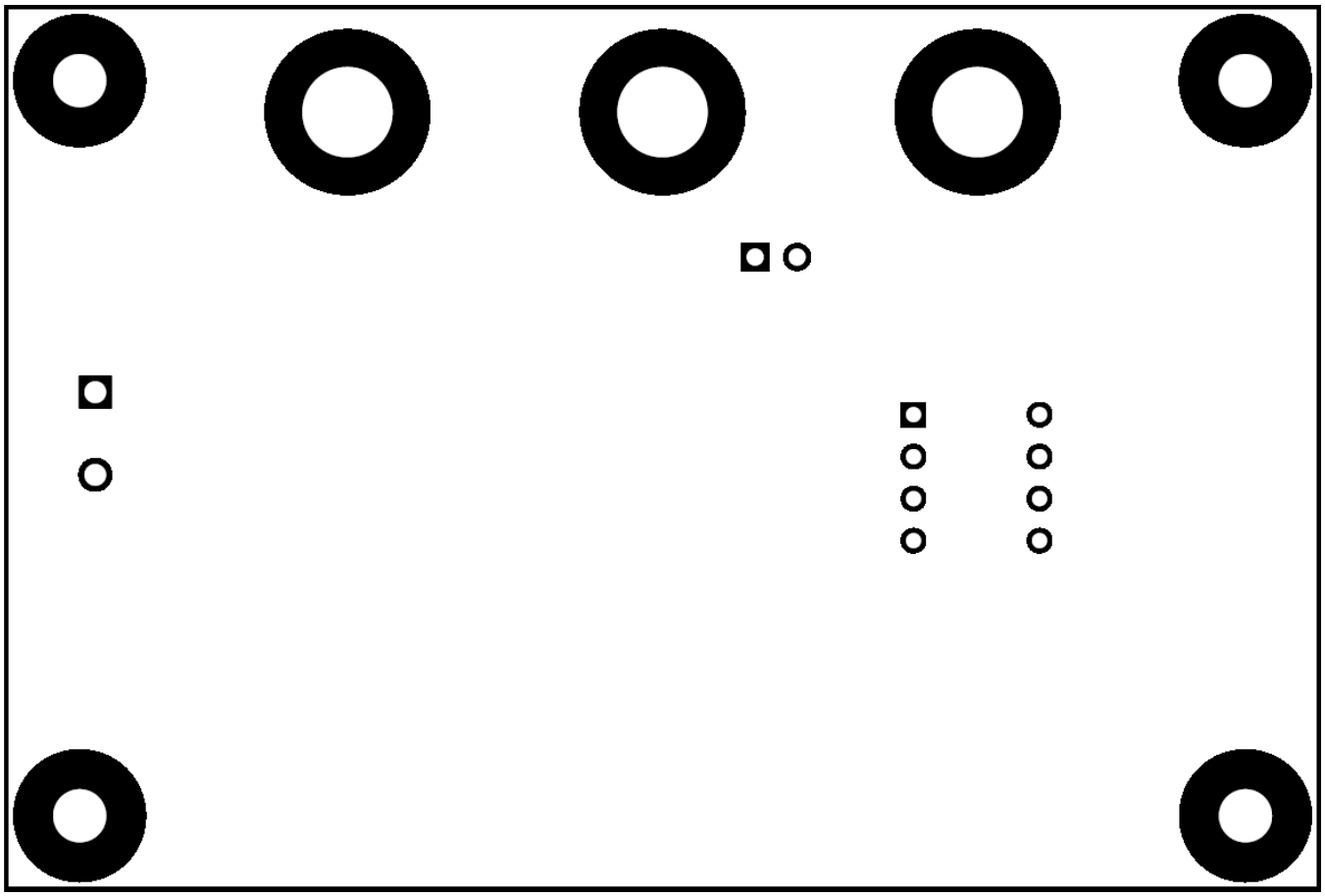

Figure 8. INA901EVM-CVAL Bottom Overlay

Copyright © 2018–2020, Texas Instruments Incorporated

6.3 Bill of Materials

Table 2 lists the INA901EVM-CVAL bill of materials.

NOTE: This evaluation kit contains Pb, a necessary component for QML parts.

Table 2. INA901EVM-CVAL Bill of Materials

Description	Designator	Part Number	QTY	Manufacturer	Package Reference	Value
CAP, CERM, 0.1 uF, 100 V, ±10%, X7R, 0805	C4, C7	C0805C104K1RACTU	2	Kemet	0805	0.1uF
CAP, CERM, 15 pF, 50 V, ±5%, C0G/NP0, 0805	C5	VJ0805A150JXACW1BC	1	Vishay-Bccomponents	0805	15pF
Standoff, Hex, 0.5"L #4-40 Nylon	H1, H3, H5, H7	1902C	4	Keystone	Standoff	
Machine Screw, Round, #4-40 x 1/4, Nylon, Philips panhead	H2, H4, H6, H8	NY PMS 440 0025 PH	4	B&F Fastener Supply	Screw	
CONN JUMPER SHORTING .100" GOLD	H9	QPC02SXGN-RC	1	QPC02SXGN-RC		
TERM BLK 2POS SIDE ENTRY 5MM PCB	J1	691137710002	1	Würth Elektronik	HDR2	
Standard Banana Jack, Uninsulated, 5.5mm	J2, J3, J6	575-4	3	Keystone	Keystone_575-4	
Header, 100mil, 2x1, Gold, TH	J5	PBC02SAAN	1	Sullins Connector Solutions	Sullins 100mil, 1x2, 230 mil above insulator	
RES, 0, 5%, 0.125 W, AEC-Q200 Grade 0, 0805	R2, R3, R4, R5	ERJ-6GEY0R00V	4	Panasonic	0805	0
RES, 15 k, 5%, 0.125 W, AEC-Q200 Grade 0, 0805	R6, R7, R10	ERJ-6GEYJ153V	3	Panasonic	0805	15k
RES, 10.0 k, 1%, 0.25 W, AEC-Q200 Grade 0, 0805	R8	RNCP0805FTD10K0	1	Stackpole Electronics Inc	0805	10.0k
RES, 10.0 M, 1%, 0.125 W, AEC-Q200 Grade 0, 0805	R9	CRCW080510M0FKEA	1	Vishay-Dale	0805	10.0Meg
Test Point, Miniature, SMT	TP1, TP2, TP3, TP4, TP5, TP6, TP7, TP8, TP9, TP10, TP11, TP12, TP13, TP14, TP15	5015	15	Keystone	Testpoint_Keystone_Miniature	
Voltage Output, Unidirectional Measurement Current-Shunt Monitor, HKX0008A (CFP-8)	U1	INA901HKX/EM	1	Texas Instruments	HKX0008A	
Low Power Low Offset Voltage Dual Comparator, 8-pin CerDIP	U2	LM193AJRLQMLV	1	Texas Instruments		
CAP, CERM, 100 pF, 100 V, ±5%, X7R, 0805	C1, C2, C3	C0805C101J1RACTU	0	Kemet	0805	100pF
CAP, CERM, 0.01 uF, 100 V, ±1%, C0G/NP0, 0805	C6	C0805C103F1GACTU	0	Kemet	0805	0.01uF
Fiducial mark. There is nothing to buy or mount.	FID1, FID2, FID3	N/A	0	N/A	N/A	
RES, 0.025, 1%, 3 W, 2512	R1	CRA2512-FZ-R025ELF	0	Bourns	2512	0.025
RES, 15 k, 5%, 0.125 W, AEC-Q200 Grade 0, 0805	R11	ERJ-6GEYJ153V	0	Panasonic	0805	15k

Copyright © 2018–2020, Texas Instruments Incorporated

Revision History

NOTE: Page numbers for previous revisions may differ from page numbers in the current version.

Changes from Original (October 2018) to A Revision	Page
• Sample History element for revision A.	1

Copyright © 2018–2020, Texas Instruments Incorporated

STANDARD TERMS FOR EVALUATION MODULES

1. *Delivery:* TI delivers TI evaluation boards, kits, or modules, including any accompanying demonstration software, components, and/or documentation which may be provided together or separately (collectively, an “EVM” or “EVMs”) to the User (“User”) in accordance with the terms set forth herein. User's acceptance of the EVM is expressly subject to the following terms.

   1.1 EVMs are intended solely for product or software developers for use in a research and development setting to facilitate feasibility evaluation, experimentation, or scientific analysis of TI semiconductors products. EVMs have no direct function and are not finished products. EVMs shall not be directly or indirectly assembled as a part or subassembly in any finished product. For clarification, any software or software tools provided with the EVM (“Software”) shall not be subject to the terms and conditions set forth herein but rather shall be subject to the applicable terms that accompany such Software

   1.2 EVMs are not intended for consumer or household use. EVMs may not be sold, sublicensed, leased, rented, loaned, assigned, or otherwise distributed for commercial purposes by Users, in whole or in part, or used in any finished product or production system.

2 *Limited Warranty and Related Remedies/Disclaimers*:

   2.1 These terms do not apply to Software. The warranty, if any, for Software is covered in the applicable Software License Agreement.

   2.2 TI warrants that the TI EVM will conform to TI's published specifications for ninety (90) days after the date TI delivers such EVM to User. Notwithstanding the foregoing, TI shall not be liable for a nonconforming EVM if (a) the nonconformity was caused by neglect, misuse or mistreatment by an entity other than TI, including improper installation or testing, or for any EVMs that have been altered or modified in any way by an entity other than TI, (b) the nonconformity resulted from User's design, specifications or instructions for such EVMs or improper system design, or (c) User has not paid on time. Testing and other quality control techniques are used to the extent TI deems necessary. TI does not test all parameters of each EVM. User's claims against TI under this Section 2 are void if User fails to notify TI of any apparent defects in the EVMs within ten (10) business days after delivery, or of any hidden defects with ten (10) business days after the defect has been detected.

   2.3 TI's sole liability shall be at its option to repair or replace EVMs that fail to conform to the warranty set forth above, or credit User's account for such EVM. TI's liability under this warranty shall be limited to EVMs that are returned during the warranty period to the address designated by TI and that are determined by TI not to conform to such warranty. If TI elects to repair or replace such EVM, TI shall have a reasonable time to repair such EVM or provide replacements. Repaired EVMs shall be warranted for the remainder of the original warranty period. Replaced EVMs shall be warranted for a new full ninety (90) day warranty period.

WARNING

Evaluation Kits are intended solely for use by technically qualified, professional electronics experts who are familiar with the dangers and application risks associated with handling electrical mechanical components, systems, and subsystems.

User shall operate the Evaluation Kit within TI’s recommended guidelines and any applicable legal or environmental requirements as well as reasonable and customary safeguards. Failure to set up and/or operate the Evaluation Kit within TI’s recommended guidelines may result in personal injury or death or property damage. Proper set up entails following TI’s instructions for electrical ratings of interface circuits such as input, output and electrical loads.

NOTE:

EXPOSURE TO ELECTROSTATIC DISCHARGE (ESD) MAY CAUSE DEGREDATION OR FAILURE OF THE EVALUATION KIT; TI RECOMMENDS STORAGE OF THE EVALUATION KIT IN A PROTECTIVE ESD BAG.

3 *Regulatory Notices:*

3.1 *United States*

3.1.1 *Notice applicable to EVMs not FCC-Approved:*

FCC NOTICE: This kit is designed to allow product developers to evaluate electronic components, circuitry, or software associated with the kit to determine whether to incorporate such items in a finished product and software developers to write software applications for use with the end product. This kit is not a finished product and when assembled may not be resold or otherwise marketed unless all required FCC equipment authorizations are first obtained. Operation is subject to the condition that this product not cause harmful interference to licensed radio stations and that this product accept harmful interference. Unless the assembled kit is designed to operate under part 15, part 18 or part 95 of this chapter, the operator of the kit must operate under the authority of an FCC license holder or must secure an experimental authorization under part 5 of this chapter.

3.1.2 *For EVMs annotated as FCC – FEDERAL COMMUNICATIONS COMMISSION Part 15 Compliant:*

CAUTION

This device complies with part 15 of the FCC Rules. Operation is subject to the following two conditions: (1) This device may not cause harmful interference, and (2) this device must accept any interference received, including interference that may cause undesired operation.

Changes or modifications not expressly approved by the party responsible for compliance could void the user's authority to operate the equipment.

FCC Interference Statement for Class A EVM devices

NOTE: This equipment has been tested and found to comply with the limits for a Class A digital device, pursuant to part 15 of the FCC Rules. These limits are designed to provide reasonable protection against harmful interference when the equipment is operated in a commercial environment. This equipment generates, uses, and can radiate radio frequency energy and, if not installed and used in accordance with the instruction manual, may cause harmful interference to radio communications. Operation of this equipment in a residential area is likely to cause harmful interference in which case the user will be required to correct the interference at his own expense.

FCC Interference Statement for Class B EVM devices

NOTE: This equipment has been tested and found to comply with the limits for a Class B digital device, pursuant to part 15 of the FCC Rules. These limits are designed to provide reasonable protection against harmful interference in a residential installation. This equipment generates, uses and can radiate radio frequency energy and, if not installed and used in accordance with the instructions, may cause harmful interference to radio communications. However, there is no guarantee that interference will not occur in a particular installation. If this equipment does cause harmful interference to radio or television reception, which can be determined by turning the equipment off and on, the user is encouraged to try to correct the interference by one or more of the following measures:

- *Reorient or relocate the receiving antenna.*
- *Increase the separation between the equipment and receiver.*
- *Connect the equipment into an outlet on a circuit different from that to which the receiver is connected.*
- *Consult the dealer or an experienced radio/TV technician for help.*

3.2 *Canada*

3.2.1 *For EVMs issued with an Industry Canada Certificate of Conformance to RSS-210 or RSS-247*

Concerning EVMs Including Radio Transmitters:

This device complies with Industry Canada license-exempt RSSs. Operation is subject to the following two conditions:

(1) this device may not cause interference, and (2) this device must accept any interference, including interference that may cause undesired operation of the device.

Concernant les EVMs avec appareils radio:

Le présent appareil est conforme aux CNR d'Industrie Canada applicables aux appareils radio exempts de licence. L'exploitation est autorisée aux deux conditions suivantes: (1) l'appareil ne doit pas produire de brouillage, et (2) l'utilisateur de l'appareil doit accepter tout brouillage radioélectrique subi, même si le brouillage est susceptible d'en compromettre le fonctionnement.

Concerning EVMs Including Detachable Antennas:

Under Industry Canada regulations, this radio transmitter may only operate using an antenna of a type and maximum (or lesser) gain approved for the transmitter by Industry Canada. To reduce potential radio interference to other users, the antenna type and its gain should be so chosen that the equivalent isotropically radiated power (e.i.r.p.) is not more than that necessary for successful communication. This radio transmitter has been approved by Industry Canada to operate with the antenna types listed in the user guide with the maximum permissible gain and required antenna impedance for each antenna type indicated. Antenna types not included in this list, having a gain greater than the maximum gain indicated for that type, are strictly prohibited for use with this device.

Concernant les EVMs avec antennes détachables

Conformément à la réglementation d'Industrie Canada, le présent émetteur radio peut fonctionner avec une antenne d'un type et d'un gain maximal (ou inférieur) approuvé pour l'émetteur par Industrie Canada. Dans le but de réduire les risques de brouillage radioélectrique à l'intention des autres utilisateurs, il faut choisir le type d'antenne et son gain de sorte que la puissance isotrope rayonnée équivalente (p.i.r.e.) ne dépasse pas l'intensité nécessaire à l'établissement d'une communication satisfaisante. Le présent émetteur radio a été approuvé par Industrie Canada pour fonctionner avec les types d'antenne énumérés dans le manuel d'usage et ayant un gain admissible maximal et l'impédance requise pour chaque type d'antenne. Les types d'antenne non inclus dans cette liste, ou dont le gain est supérieur au gain maximal indiqué, sont strictement interdits pour l'exploitation de l'émetteur

3.3 *Japan*

3.3.1 *Notice for EVMs delivered in Japan:* Please see http://www.tij.co.jp/lsds/ti_ja/general/eStore/notice_01.page 日本国内に輸入される評価用キット、ボードについては、次のところをご覧ください。
http://www.tij.co.jp/lsds/ti_ja/general/eStore/notice_01.page

3.3.2 *Notice for Users of EVMs Considered "Radio Frequency Products" in Japan:* EVMs entering Japan may not be certified by TI as conforming to Technical Regulations of Radio Law of Japan.

If User uses EVMs in Japan, not certified to Technical Regulations of Radio Law of Japan, User is required to follow the instructions set forth by Radio Law of Japan, which includes, but is not limited to, the instructions below with respect to EVMs (which for the avoidance of doubt are stated strictly for convenience and should be verified by User):

1. Use EVMs in a shielded room or any other test facility as defined in the notification #173 issued by Ministry of Internal Affairs and Communications on March 28, 2006, based on Sub-section 1.1 of Article 6 of the Ministry's Rule for Enforcement of Radio Law of Japan,
2. Use EVMs only after User obtains the license of Test Radio Station as provided in Radio Law of Japan with respect to EVMs, or
3. Use of EVMs only after User obtains the Technical Regulations Conformity Certification as provided in Radio Law of Japan with respect to EVMs. Also, do not transfer EVMs, unless User gives the same notice above to the transferee. Please note that if User does not follow the instructions above, User will be subject to penalties of Radio Law of Japan.

【無線電波を送信する製品の開発キットをお使いになる際の注意事項】 開発キットの中には技術基準適合証明を受けていないものがあります。 技術適合証明を受けていないもののご使用に際しては、電波法遵守のため、以下のいずれかの措置を取っていただく必要がありますのでご注意ください。

1. 電波法施行規則第6条第1項第1号に基づく平成18年3月28日総務省告示第173号で定められた電波暗室等の試験設備でご使用いただく。
2. 実験局の免許を取得後ご使用いただく。
3. 技術基準適合証明を取得後ご使用いただく。

なお、本製品は、上記の「ご使用にあたっての注意」を譲渡先、移転先に通知しない限り、譲渡、移転できないものとします。
上記を遵守頂けない場合は、電波法の罰則が適用される可能性があることをご留意ください。 日本テキサス・インスツルメンツ株式会社
東京都新宿区西新宿 6 丁目 2 4 番 1 号
西新宿三井ビル

3.3.3 *Notice for EVMs for Power Line Communication:* Please see http://www.tij.co.jp/lsds/ti_ja/general/eStore/notice_02.page
電力線搬送波通信についての開発キットをお使いになる際の注意事項については、次のところをご覧ください。http://www.tij.co.jp/lsds/ti_ja/general/eStore/notice_02.page

3.4 *European Union*

3.4.1 *For EVMs subject to EU Directive 2014/30/EU (Electromagnetic Compatibility Directive)*:

This is a class A product intended for use in environments other than domestic environments that are connected to a low-voltage power-supply network that supplies buildings used for domestic purposes. In a domestic environment this product may cause radio interference in which case the user may be required to take adequate measures.

4 *EVM Use Restrictions and Warnings:*

4.1 EVMS ARE NOT FOR USE IN FUNCTIONAL SAFETY AND/OR SAFETY CRITICAL EVALUATIONS, INCLUDING BUT NOT LIMITED TO EVALUATIONS OF LIFE SUPPORT APPLICATIONS.

4.2 User must read and apply the user guide and other available documentation provided by TI regarding the EVM prior to handling or using the EVM, including without limitation any warning or restriction notices. The notices contain important safety information related to, for example, temperatures and voltages.

4.3 *Safety-Related Warnings and Restrictions:*

4.3.1 User shall operate the EVM within TI's recommended specifications and environmental considerations stated in the user guide, other available documentation provided by TI, and any other applicable requirements and employ reasonable and customary safeguards. Exceeding the specified performance ratings and specifications (including but not limited to input and output voltage, current, power, and environmental ranges) for the EVM may cause personal injury or death, or property damage. If there are questions concerning performance ratings and specifications, User should contact a TI field representative prior to connecting interface electronics including input power and intended loads. Any loads applied outside of the specified output range may also result in unintended and/or inaccurate operation and/or possible permanent damage to the EVM and/or interface electronics. Please consult the EVM user guide prior to connecting any load to the EVM output. If there is uncertainty as to the load specification, please contact a TI field representative. During normal operation, even with the inputs and outputs kept within the specified allowable ranges, some circuit components may have elevated case temperatures. These components include but are not limited to linear regulators, switching transistors, pass transistors, current sense resistors, and heat sinks, which can be identified using the information in the associated documentation. When working with the EVM, please be aware that the EVM may become very warm.

4.3.2 EVMs are intended solely for use by technically qualified, professional electronics experts who are familiar with the dangers and application risks associated with handling electrical mechanical components, systems, and subsystems. User assumes all responsibility and liability for proper and safe handling and use of the EVM by User or its employees, affiliates, contractors or designees. User assumes all responsibility and liability to ensure that any interfaces (electronic and/or mechanical) between the EVM and any human body are designed with suitable isolation and means to safely limit accessible leakage currents to minimize the risk of electrical shock hazard. User assumes all responsibility and liability for any improper or unsafe handling or use of the EVM by User or its employees, affiliates, contractors or designees.

4.4 User assumes all responsibility and liability to determine whether the EVM is subject to any applicable international, federal, state, or local laws and regulations related to User's handling and use of the EVM and, if applicable, User assumes all responsibility and liability for compliance in all respects with such laws and regulations. User assumes all responsibility and liability for proper disposal and recycling of the EVM consistent with all applicable international, federal, state, and local requirements.

5. *Accuracy of Information:* To the extent TI provides information on the availability and function of EVMs, TI attempts to be as accurate as possible. However, TI does not warrant the accuracy of EVM descriptions, EVM availability or other information on its websites as accurate, complete, reliable, current, or error-free.

6. *Disclaimers:*

6.1 EXCEPT AS SET FORTH ABOVE, EVMS AND ANY MATERIALS PROVIDED WITH THE EVM (INCLUDING, BUT NOT LIMITED TO, REFERENCE DESIGNS AND THE DESIGN OF THE EVM ITSELF) ARE PROVIDED "AS IS" AND "WITH ALL FAULTS." TI DISCLAIMS ALL OTHER WARRANTIES, EXPRESS OR IMPLIED, REGARDING SUCH ITEMS, INCLUDING BUT NOT LIMITED TO ANY EPIDEMIC FAILURE WARRANTY OR IMPLIED WARRANTIES OF MERCHANTABILITY OR FITNESS FOR A PARTICULAR PURPOSE OR NON-INFRINGEMENT OF ANY THIRD PARTY PATENTS, COPYRIGHTS, TRADE SECRETS OR OTHER INTELLECTUAL PROPERTY RIGHTS.

6.2 EXCEPT FOR THE LIMITED RIGHT TO USE THE EVM SET FORTH HEREIN, NOTHING IN THESE TERMS SHALL BE CONSTRUED AS GRANTING OR CONFERRING ANY RIGHTS BY LICENSE, PATENT, OR ANY OTHER INDUSTRIAL OR INTELLECTUAL PROPERTY RIGHT OF TI, ITS SUPPLIERS/LICENSORS OR ANY OTHER THIRD PARTY, TO USE THE EVM IN ANY FINISHED END-USER OR READY-TO-USE FINAL PRODUCT, OR FOR ANY INVENTION, DISCOVERY OR IMPROVEMENT, REGARDLESS OF WHEN MADE, CONCEIVED OR ACQUIRED.

7. *USER'S INDEMNITY OBLIGATIONS AND REPRESENTATIONS.* USER WILL DEFEND, INDEMNIFY AND HOLD TI, ITS LICENSORS AND THEIR REPRESENTATIVES HARMLESS FROM AND AGAINST ANY AND ALL CLAIMS, DAMAGES, LOSSES, EXPENSES, COSTS AND LIABILITIES (COLLECTIVELY, "CLAIMS") ARISING OUT OF OR IN CONNECTION WITH ANY HANDLING OR USE OF THE EVM THAT IS NOT IN ACCORDANCE WITH THESE TERMS. THIS OBLIGATION SHALL APPLY WHETHER CLAIMS ARISE UNDER STATUTE, REGULATION, OR THE LAW OF TORT, CONTRACT OR ANY OTHER LEGAL THEORY, AND EVEN IF THE EVM FAILS TO PERFORM AS DESCRIBED OR EXPECTED.

8. *Limitations on Damages and Liability:*

   8.1 *General Limitations*. IN NO EVENT SHALL TI BE LIABLE FOR ANY SPECIAL, COLLATERAL, INDIRECT, PUNITIVE, INCIDENTAL, CONSEQUENTIAL, OR EXEMPLARY DAMAGES IN CONNECTION WITH OR ARISING OUT OF THESE TERMS OR THE USE OF THE EVMS , REGARDLESS OF WHETHER TI HAS BEEN ADVISED OF THE POSSIBILITY OF SUCH DAMAGES. EXCLUDED DAMAGES INCLUDE, BUT ARE NOT LIMITED TO, COST OF REMOVAL OR REINSTALLATION, ANCILLARY COSTS TO THE PROCUREMENT OF SUBSTITUTE GOODS OR SERVICES, RETESTING, OUTSIDE COMPUTER TIME, LABOR COSTS, LOSS OF GOODWILL, LOSS OF PROFITS, LOSS OF SAVINGS, LOSS OF USE, LOSS OF DATA, OR BUSINESS INTERRUPTION. NO CLAIM, SUIT OR ACTION SHALL BE BROUGHT AGAINST TI MORE THAN TWELVE (12) MONTHS AFTER THE EVENT THAT GAVE RISE TO THE CAUSE OF ACTION HAS OCCURRED.

   8.2 *Specific Limitations.* IN NO EVENT SHALL TI'S AGGREGATE LIABILITY FROM ANY USE OF AN EVM PROVIDED HEREUNDER, INCLUDING FROM ANY WARRANTY, INDEMITY OR OTHER OBLIGATION ARISING OUT OF OR IN CONNECTION WITH THESE TERMS, , EXCEED THE TOTAL AMOUNT PAID TO TI BY USER FOR THE PARTICULAR EVM(S) AT ISSUE DURING THE PRIOR TWELVE (12) MONTHS WITH RESPECT TO WHICH LOSSES OR DAMAGES ARE CLAIMED. THE EXISTENCE OF MORE THAN ONE CLAIM SHALL NOT ENLARGE OR EXTEND THIS LIMIT.

9. *Return Policy.* Except as otherwise provided, TI does not offer any refunds, returns, or exchanges. Furthermore, no return of EVM(s) will be accepted if the package has been opened and no return of the EVM(s) will be accepted if they are damaged or otherwise not in a resalable condition. If User feels it has been incorrectly charged for the EVM(s) it ordered or that delivery violates the applicable order, User should contact TI. All refunds will be made in full within thirty (30) working days from the return of the components(s), excluding any postage or packaging costs.

10. *Governing Law:* These terms and conditions shall be governed by and interpreted in accordance with the laws of the State of Texas, without reference to conflict-of-laws principles. User agrees that non-exclusive jurisdiction for any dispute arising out of or relating to these terms and conditions lies within courts located in the State of Texas and consents to venue in Dallas County, Texas. Notwithstanding the foregoing, any judgment may be enforced in any United States or foreign court, and TI may seek injunctive relief in any United States or foreign court.

Mailing Address: Texas Instruments, Post Office Box 655303, Dallas, Texas 75265
Copyright © 2019, Texas Instruments Incorporated

IMPORTANT NOTICE AND DISCLAIMER

TI PROVIDES TECHNICAL AND RELIABILITY DATA (INCLUDING DATASHEETS), DESIGN RESOURCES (INCLUDING REFERENCE DESIGNS), APPLICATION OR OTHER DESIGN ADVICE, WEB TOOLS, SAFETY INFORMATION, AND OTHER RESOURCES “AS IS” AND WITH ALL FAULTS, AND DISCLAIMS ALL WARRANTIES, EXPRESS AND IMPLIED, INCLUDING WITHOUT LIMITATION ANY IMPLIED WARRANTIES OF MERCHANTABILITY, FITNESS FOR A PARTICULAR PURPOSE OR NON-INFRINGEMENT OF THIRD PARTY INTELLECTUAL PROPERTY RIGHTS.

These resources are intended for skilled developers designing with TI products. You are solely responsible for (1) selecting the appropriate TI products for your application, (2) designing, validating and testing your application, and (3) ensuring your application meets applicable standards, and any other safety, security, or other requirements. These resources are subject to change without notice. TI grants you permission to use these resources only for development of an application that uses the TI products described in the resource. Other reproduction and display of these resources is prohibited. No license is granted to any other TI intellectual property right or to any third party intellectual property right. TI disclaims responsibility for, and you will fully indemnify TI and its representatives against, any claims, damages, costs, losses, and liabilities arising out of your use of these resources.

TI’s products are provided subject to TI’s Terms of Sale (www.ti.com/legal/termsofsale.html) or other applicable terms available either on ti.com or provided in conjunction with such TI products. TI’s provision of these resources does not expand or otherwise alter TI’s applicable warranties or warranty disclaimers for TI products.

Mailing Address: Texas Instruments, Post Office Box 655303, Dallas, Texas 75265
Copyright © 2020, Texas Instruments Incorporated