INA827 Wide Supply Range, Rail-to-Rail Output Instrumentation Amplifier With a Minimum Gain of 5

1 Features

- Eliminates Errors from External Resistors at Gain of 5
- Common-Mode Range Goes Below Negative Supply
- Input Protection: Up to ±40 V
- Rail-to-Rail Output
- Outstanding Precision:
  - Common-Mode Rejection: 88 dB, minimum
  - Low Offset Voltage: 150 µV, maximum
  - Low Drift: 2.5 µV/°C, maximum
  - Low Gain Drift: 1 ppm/°C, max (G = 5 V/V)
  - Power-Supply Rejection: 100 dB, min (G = 5)
  - Noise: 17 nV/√Hz, G = 1000 V/V
- High Bandwidth:
  - G = 5: 600 kHz
  - G = 100: 150 kHz
- Supply Current: 200 µA, typical
- Supply Range:
  - Single Supply: 3 V to 36 V
  - Dual Supply: ±1.5 V to ±18 V
- Specified Temperature Range: –40°C to +125°C
- Package: 8-pin VSSOP

2 Applications

- Industrial Process Controls
- Multichannel Systems
- Power Automation
- Weigh Scales
- Medical Instrumentation
- Data Acquisition

3 Description

The INA827 is a low-cost instrumentation amplifier (INA) that offers extremely low power consumption and operates over a very wide single- or dual-supply range. The device is optimized for the lowest possible gain drift of only 1 ppm per degree Celsius in G = 5, which requires no external resistor. However, a single external resistor sets any gain from 5 to 1000.

The INA827 is optimized to provide excellent common-mode rejection ratio (CMRR) of over 88 dB (G = 5) over frequencies up to 5 kHz. In G = 5, CMRR exceeds 88 dB across the full input common-mode range from the negative supply all the way up to 1 V of the positive supply. Using a rail-to-rail output, the INA827 is well-suited for low-voltage operation from a 3-V singlesupply as well as dual supplies up to ±18 V. Additional circuitry protects the inputs against overvoltage of up to ±40 V beyond the power supplies by limiting the input currents to a save level.

The INA827 is available in a small VSSOP-8 package and is specified for the –40°C to +125°C temperature range. For a similar instrumentation amplifier with a gain range of 1 V/V to 1000 V/V, see the INA826.

Device Information(1)

PART NUMBER	PACKAGE	BODY SIZE (NOM)
INA827	VSSOP (8)	3.00 mm × 3.00 mm

(1) For all available packages, see the orderable addendum at the end of the data sheet.

Simplified Schematic

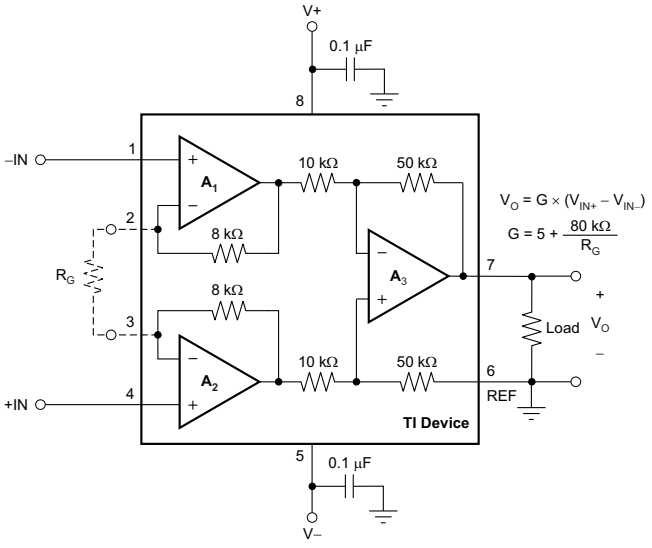

Copyright © 2016, Texas Instruments Incorporated

An IMPORTANT NOTICE at the end of this data sheet addresses availability, warranty, changes, use in safety-critical applications, intellectual property matters and other important disclaimers. PRODUCTION DATA.

Table of Contents

1 Features ... 1
2 Applications ... 1
3 Description ... 1
4 Revision History ... 2
5 Pin Configuration and Functions ... 3
6 Specifications ... 4
6.1 Absolute Maximum Ratings ... 4
6.2 ESD Ratings ... 4
6.3 Recommended Operating Conditions ... 4
6.4 Thermal Information ... 4
6.5 Electrical Characteristics ... 5
6.6 Typical Characteristics ... 7
7 Detailed Description ... 16
7.1 Overview ... 16
7.2 Functional Block Diagram ... 16
7.3 Feature Description ... 17
7.4 Device Functional Modes ... 23
8 Application and Implementation ... 24
8.1 Application Information ... 24
8.2 Typical Application ... 25
9 Power Supply Recommendations ... 27
10 Layout ... 27
10.1 Layout Guidelines ... 27
10.2 Layout Example ... 27
11 Device and Documentation Support ... 28
11.1 Documentation Support ... 28
11.2 Receiving Notification of Documentation Updates 28
11.3 Community Resources ... 28
11.4 Trademarks ... 28
11.5 Electrostatic Discharge Caution ... 28
11.6 Glossary ... 28
12 Mechanical, Packaging, and Orderable Information ... 28

4 Revision History

Changes from Revision A (July 2013) to Revision B **Page**

- Added *Device Information* table, *ESD Ratings* table, *Recommended Operating Conditions* table, *Overview* section, *Functional Block Diagram* section, *Feature Description* section, *Device Functional Modes* section, *Application and Implementation* section, *Power Supply Recommendations* section, *Layout* section, *Device and Documentation Support* section, and *Mechanical, Packaging, and Orderable Information* section ... 1
- Deleted device graphic from top of page 1 ... 1
- Changed *Features* section: changed sub-bullets of *Supply Range* bullet ... 1
- Changed MSOP to VSSOP throughout document ... 1
- Changed single supply value in first paragraph of *Description* section ... 1
- Added *Simplified Schematic* title ... 1
- Deleted *Package and Ordering Information* table ... 3
- Changed *Pin Configuration and Functions*section: changed section title, changed *Pin Functions* title, added I/O column ... 3
- Changed test conditions of Input, *PSRR* and V_{CM} parameters in *Electrical Characteristics* table ... 5
- Changed minimum specifications of Power Supply, V_S parameter in *Electrical Characteristics* table ... 6
- Changed *Typical Characteristics* section: moved conditions from title to conditions line under curve ... 7
- Changed conditions of Figure 7 and Figure 8 ... 8
- Changed conditions of Figure 37 and Figure 38 ... 13
- Changed power-supply range in *Operating Voltage* section ... 22
- Changed power supply low level in *Low-Voltage Operation* section ... 22
- Added *Design Requirements*, *Detailed Design Procedure*, and *Application Curves* to the *Typical Application* section ... 25

Changes from Original (June 2012) to Revision A **Page**

- Changed front-page graphic ... 1
- Updated Figure 15 ... 8
- Updated Figure 16 ... 8
- Updated Figure 61 ... 24

Copyright © 2012–2017, Texas Instruments Incorporated

5 Pin Configuration and Functions

DGK Package
8-Pin VSSOP
Top View

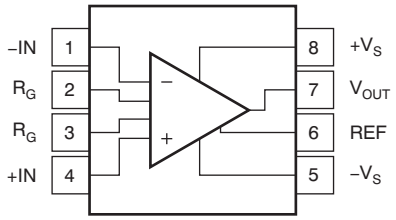

Pin Functions

NAME	NO.	I/O	DESCRIPTION
–IN	1	I	Negative input
+IN	4	I	Positive input
REF	6	I	Reference input. This pin must be driven by low impedance.
R_G	2, 3	—	Gain setting pin. Place a gain resistor between pin 2 and pin 3.
V_{OUT}	7	O	Output
$–V_S$	5	—	Negative supply
$+V_S$	8	—	Positive supply

Copyright © 2012–2017, Texas Instruments Incorporated

6 Specifications

6.1 Absolute Maximum Ratings[1]

		MIN	MAX	UNIT
Voltage	Supply	–20	20	V
	Input	–40	40	
REF input		–20	20	V
Output short-circuit[2]		Continuous		
Temperature range	Operating, T_A	–55	150	°C
	Junction, T_J		175	
	Storage, T_{stg}	–65	150	

(1) Stresses beyond those listed under *Absolute Maximum Ratings* may cause permanent damage to the device. These are stress ratings only, which do not imply functional operation of the device at these or any other conditions beyond those indicated under *Recommended Operating Conditions*. Exposure to absolute-maximum-rated conditions for extended periods may affect device reliability.
(2) Short-circuit to V_S / 2.

6.2 ESD Ratings

			VALUE	UNIT
$V_{(ESD)}$	Electrostatic discharge	Human-body model (HBM), per ANSI/ESDA/JEDEC JS-001[1]	±2000	V
		Charged-device model (CDM), per JEDEC specification JESD22-C101[2]	±750	

(1) JEDEC document JEP155 states that 500-V HBM allows safe manufacturing with a standard ESD control process.
(2) JEDEC document JEP157 states that 250-V CDM allows safe manufacturing with a standard ESD control process.

6.3 Recommended Operating Conditions

over operating free-air temperature range (unless otherwise noted)

		MIN	NOM	MAX	UNIT
Supply voltage	Single supply	3		36	V
	Dual supply	±1.5		±18	
Specified temperature		–40		125	°C
Operating temperature		–50		150	°C

6.4 Thermal Information

THERMAL METRIC[1]		INA827 DGK (VSSOP) 8 PINS	UNIT
$R_{\theta JA}$	Junction-to-ambient thermal resistance	215.4	°C/W
$R_{\theta JC(top)}$	Junction-to-case (top) thermal resistance	66.3	°C/W
$R_{\theta JB}$	Junction-to-board thermal resistance	97.8	°C/W
ψ_{JT}	Junction-to-top characterization parameter	10.5	°C/W
ψ_{JB}	Junction-to-board characterization parameter	96.1	°C/W
$R_{\theta JC(bot)}$	Junction-to-case (bottom) thermal resistance	N/A	°C/W

(1) For more information about traditional and new thermal metrics, see the *Semiconductor and IC Package Thermal Metrics* application report.

Copyright © 2012–2017, Texas Instruments Incorporated

6.5 Electrical Characteristics

at T_A = +25°C, V_S = ±15 V, R_L = 10 kΩ, V_{REF} = 0 V, and G = 5 (unless otherwise noted)

PARAMETER			TEST CONDITIONS		MIN	TYP	MAX	UNIT
INPUT								
V_{OSI}	Offset voltage(1)	Input stage	RTI, $V_{OS} = V_{OSI} + (V_{OSO} / G)$			40	150	µV
			T_A = –40°C to +125°C			0.5	2.5	µV/°C
V_{OSO}		Output stage	RTI, $V_{OS} = V_{OSI} + (V_{OSO} / G)$			500	2000	µV
			T_A = –40°C to +125°C			5	30	µV/°C
PSRR	Power-supply rejection ratio		G = 5, V_S = ±1.5 V to ±18 V		100	120		dB
			G = 10, V_S = ±1.5 V to ±18 V		106	126		
			G > 100, V_S = ±1.5 V to ±18 V		120	140		
Z_{IN}	Impedance	Differential				2 || 1		GΩ || pF
		Common-mode				10 || 5		
	RFI filter, –3-dB frequency					25		MHz
V_{CM}	Operating input range(2)		V_S = ±1.5 V to ±18 V, V_O = 0 V		(V–) – 0.2		(V+) – 0.9	V
			V_S = ±1.5 V to ±18 V, V_O = 0 V, T_A = +125°C		(V–) – 0.05		(V+) – 0.8	
			V_S = ±1.5 V to ±18 V, V_O = 0 V, T_A = –40°C		(V–) – 0.3		(V+) – 0.95	
	Input overvoltage range		T_A = –40°C to +125°C		(V+) – 40		(V–) + 40	V
CMRR	Common-mode rejection ratio		DC to 60 Hz	G = 5, V_{CM} = V– to (V+) – 1 V	88	100		dB
				G = 10, V_{CM} = V– to (V+) – 1 V	94	106		
				G > 100, V_{CM} = V– to (V+) – 1 V	110	126		
			At 5 kHz	G = 5, V_{CM} = V– to (V+) – 1 V		88		
				G = 10, V_{CM} = V– to (V+) – 1 V		94		
				G > 100, V_{CM} = V– to (V+) – 1 V		104		
BIAS CURRENT								
I_B	Input bias current					35	50	nA
			T_A = –40°C to +125°C				95	
I_{OS}	Input offset current				–5	0.7	5	nA
			T_A = –40°C to +125°C				10	
NOISE VOLTAGE(3)								
e_{NI}	Voltage noise	Input	f = 1 kHz, G = 1000, R_S = 0 Ω			17	18	nV/√Hz
e_{NO}		Output	f = 1 kHz, G = 5, R_S = 0 Ω			250	285	
RTI	Referred-to-input		G = 5, f_B = 0.1 Hz to 10 Hz, R_S = 0 Ω			1.4		$µV_{PP}$
			G = 1000, f_B = 0.1 Hz to 10 Hz, R_S = 0 Ω			0.5		
i_N	Noise current		f = 1 kHz			120		fA/√Hz
			f_B = 0.1 Hz to 10 Hz			5		pA_{PP}
GAIN								
G	Gain equation				$5 + \left(\frac{80\ k\Omega}{R_G}\right)$			V/V
G	Range of gain				5		1000	V/V
GE	Gain error		G = 5, V_O = ±10 V			±0.005%	±0.035%	
			G = 10 to 1000, V_O = ±10 V			±0.1%	±0.4%	
	Gain versus temperature(4)		G = 5, T_A = –40°C to +125°C			±0.1	±1	ppm/°C
			G > 5, T_A = –40°C to +125°C			8	25	
	Gain nonlinearity		G = 5 to 100, V_O = –10 V to +10 V, R_L = 10 kΩ			2	5	ppm
			G = 1000, V_O = –10 V to +10 V, R_L = 10 kΩ			20	50	

(1) Total offset, referred-to-input (RTI): $V_{OS} = V_{OSI} + (V_{OSO} / G)$.
(2) Input voltage range of the INA827 input stage. The input range depends on the common-mode voltage, differential voltage, gain, and reference voltage. See the *Typical Characteristics* section for more information.
(3) Total RTI voltage noise = $\sqrt{(e_{NI})^2 + \left(\frac{e_{NO}}{G}\right)^2}$.
(4) The values specified for G > 5 do not include the effects of the external gain-setting resistor, R_G.

Copyright © 2012–2017, Texas Instruments Incorporated

Electrical Characteristics (continued)

at T_A = +25°C, V_S = ±15 V, R_L = 10 kΩ, V_{REF} = 0 V, and G = 5 (unless otherwise noted)

PARAMETER			TEST CONDITIONS	MIN	TYP	MAX	UNIT
OUTPUT							
	Voltage swing		R_L = 10 kΩ	(V–) + 0.1		(V+) – 0.15	V
	Load capacitance stability				1000		pF
	Short-circuit current		Continuous to common		±16		mA
FREQUENCY RESPONSE							
BW	Bandwidth, –3 dB		G = 5		600		kHz
			G = 10		530		
			G = 100		150		
			G = 1000		15		
SR	Slew rate		G = 5, V_O = ±14.5 V		1.5		V/µs
			G = 100, V_O = ±14.5 V		1.5		
t_S	Settling time	To 0.01%	G = 5, V_{STEP} = 10 V		10		µs
			G = 100, V_{STEP} = 10 V		12		
			G = 1000, V_{STEP} = 10 V		95		
		To 0.001%	G = 1, V_{STEP} = 10 V		11		
			G = 100, V_{STEP} = 10 V		18		
			G = 1000, V_{STEP} = 10 V		118		
REFERENCE INPUT							
R_{IN}	Input impedance				60		kΩ
	Voltage range			V–		V+	V
	Gain to output				1		V/V
	Reference gain error				0.01		%
POWER SUPPLY							
V_S	Power-supply voltage		Single	3.0		36	V
			Dual	±1.5		±18	
I_Q	Quiescent current		V_{IN} = 0 V		200	250	µA
			T_A = –40°C to +125°C		250	320	
TEMPERATURE RANGE							
	Specified			–40		125	°C
	Operating			–50		150	°C
θ_{JA}	Thermal resistance				215		°C/W

Copyright © 2012–2017, Texas Instruments Incorporated

6.6 Typical Characteristics

at T_A = +25°C, V_S = ±15 V, R_L = 10 kΩ, V_{REF} = 0 V, and G = 5 (unless otherwise noted)

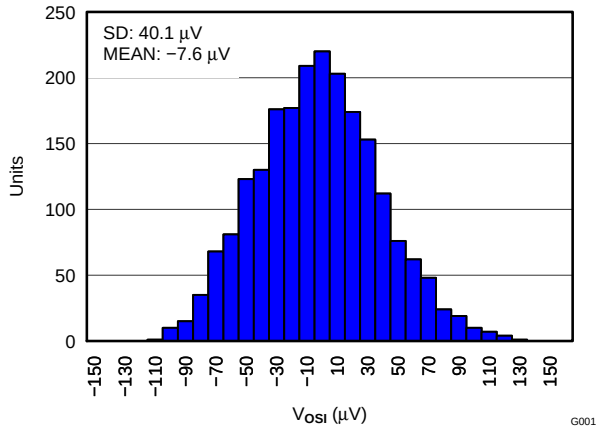

Figure 1. Typical Distribution of Input Offset Voltage

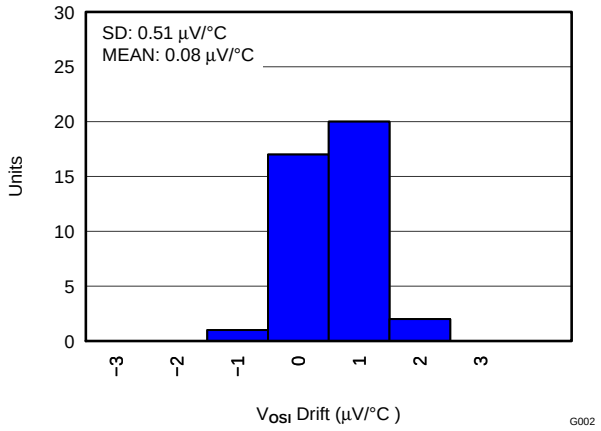

Figure 2. Typical Distribution of Input Offset Voltage Drift

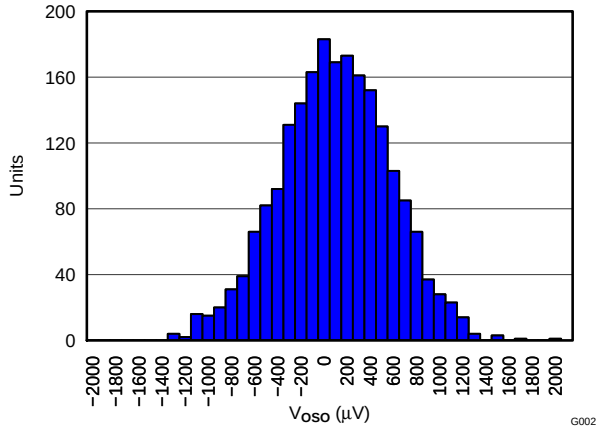

Figure 3. Typical Distribution of Output Offset Voltage

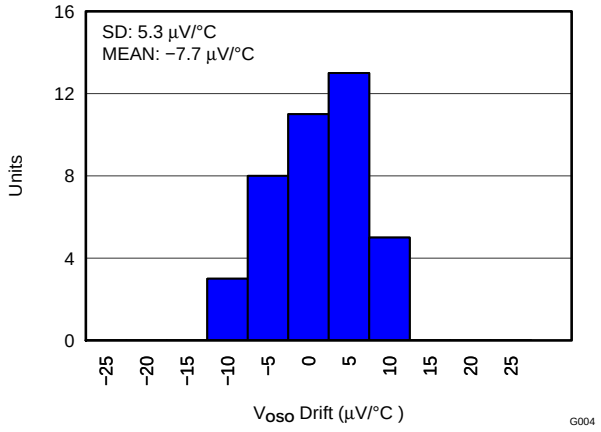

Figure 4. Typical Distribution of Output Offset Voltage Drift

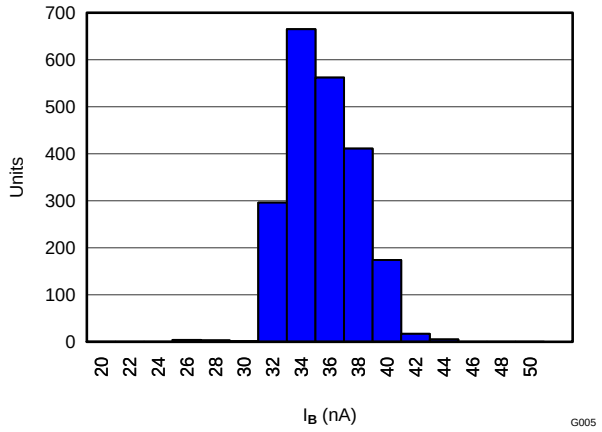

Figure 5. Typical Distribution of Input Bias Current

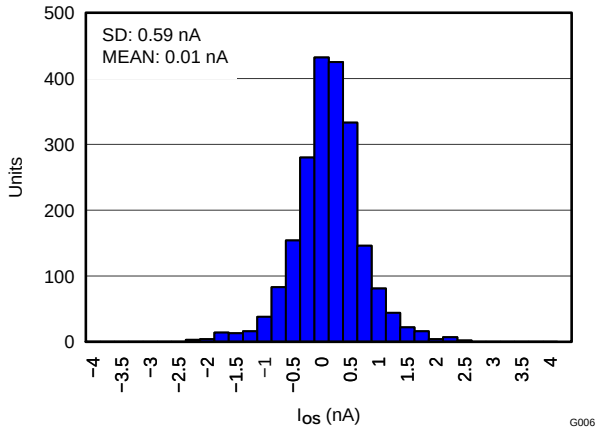

Figure 6. Typical Distribution of Input Offset Current

Copyright © 2012–2017, Texas Instruments Incorporated

Typical Characteristics (continued)

at T_A = +25°C, V_S = ±15 V, R_L = 10 kΩ, V_{REF} = 0 V, and G = 5 (unless otherwise noted)

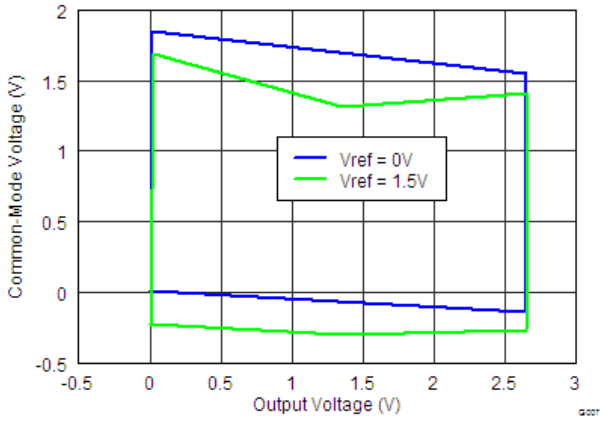

Single supply, V_S = +3 V, G = 5

Figure 7. Input Common-Mode Voltage vs Output Voltage

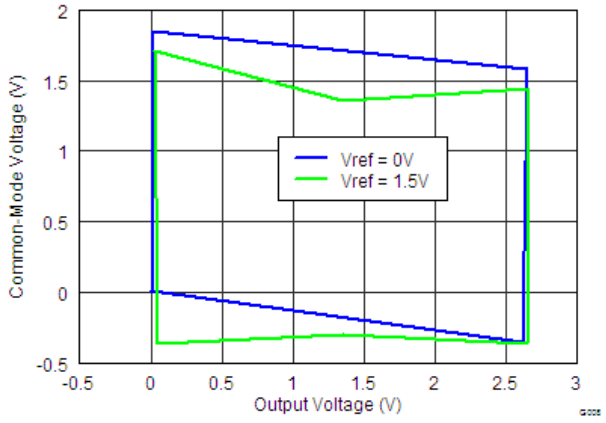

Single supply, V_S = +3 V, G = 100

Figure 8. Input Common-Mode Voltage vs Output Voltage

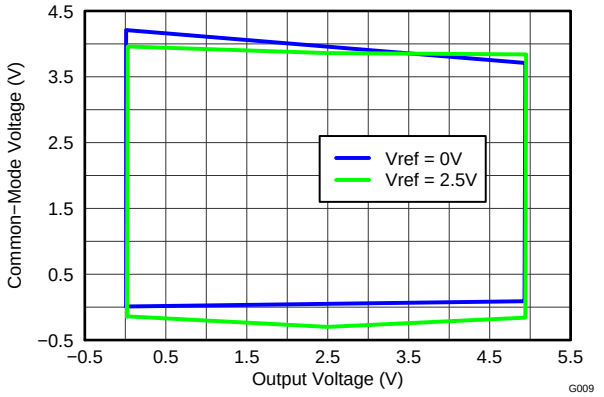

Single supply, V_S = +5 V, G = 5

Figure 9. Input Common-Mode Voltage vs Output Voltage

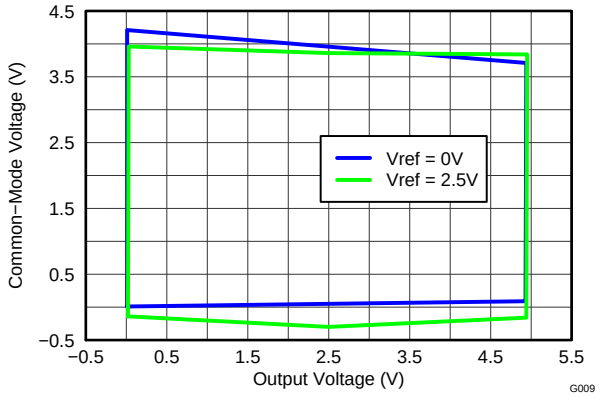

Single supply, V_S = +5 V, G = 100

Figure 10. Input Common-Mode Voltage vs Output Voltage

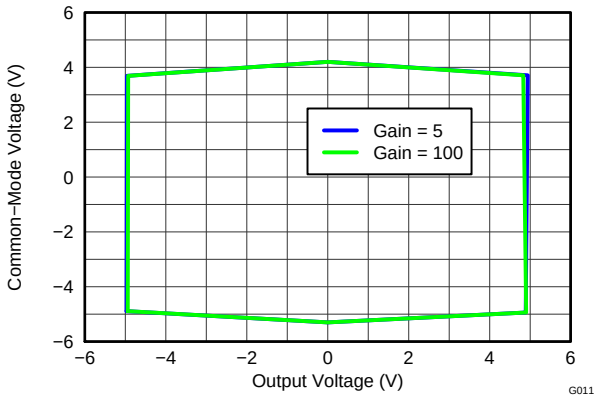

Dual supply, V_S = ±5 V

Figure 11. Input Common-Mode Voltage vs Output Voltage

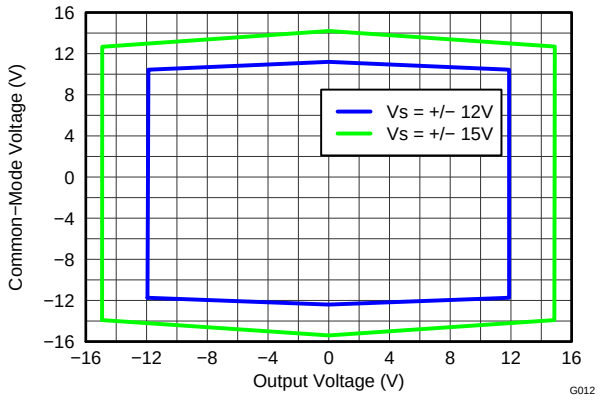

Dual supply, V_S = ±15 V, ±12 V, G = 5

Figure 12. Input Common-Mode Voltage vs Output Voltage

Copyright © 2012–2017, Texas Instruments Incorporated

Typical Characteristics (continued)

at T_A = +25°C, V_S = ±15 V, R_L = 10 kΩ, V_{REF} = 0 V, and G = 5 (unless otherwise noted)

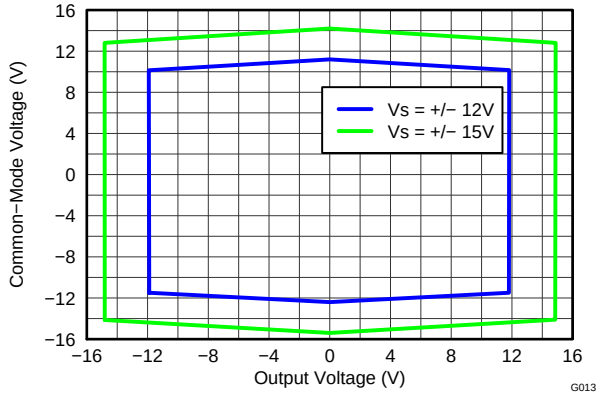

Dual supply, V_S = ±15 V, ±12 V, G = 100

Figure 13. Input Common-Mode Voltage vs Output Voltage

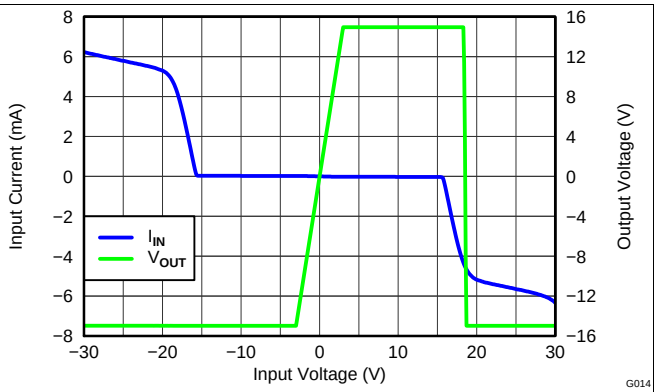

G = 1, V_S = ±15 V

Figure 14. Input Overvoltage vs Input Current

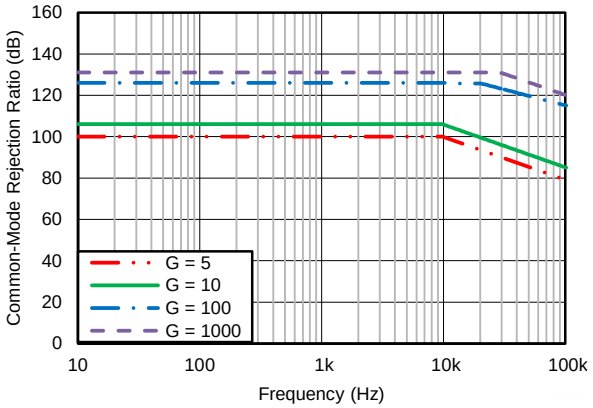

Figure 15. CMRR vs Frequency (RTI)

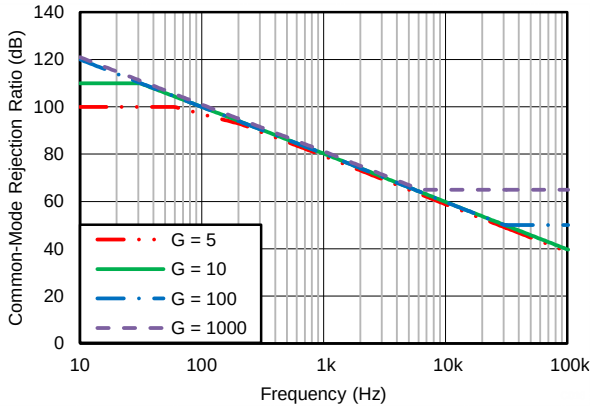

1-kΩ source imbalance

Figure 16. CMRR vs Frequency (RTI)

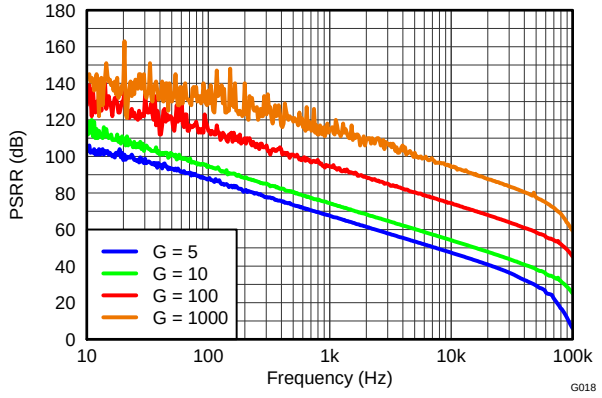

Figure 17. Positive PSRR vs Frequency (RTI)

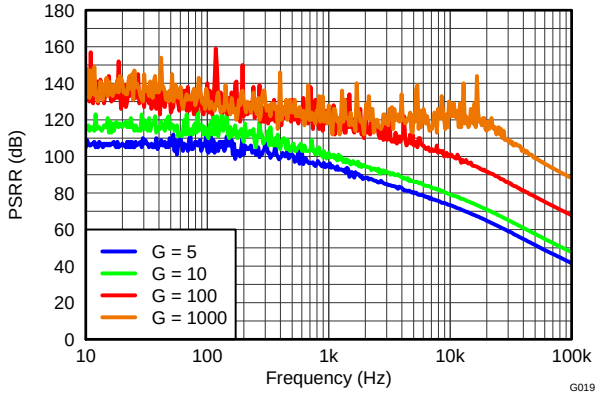

Figure 18. Negative PSRR vs Frequency (RTI)

Copyright © 2012–2017, Texas Instruments Incorporated

Typical Characteristics (continued)

at T_A = +25°C, V_S = ±15 V, R_L = 10 kΩ, V_{REF} = 0 V, and G = 5 (unless otherwise noted)

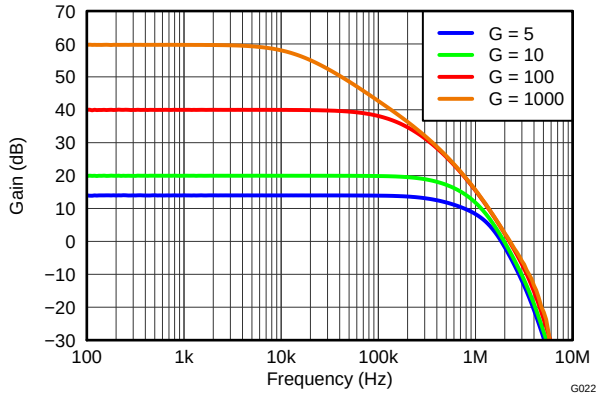

Figure 19. Gain vs Frequency

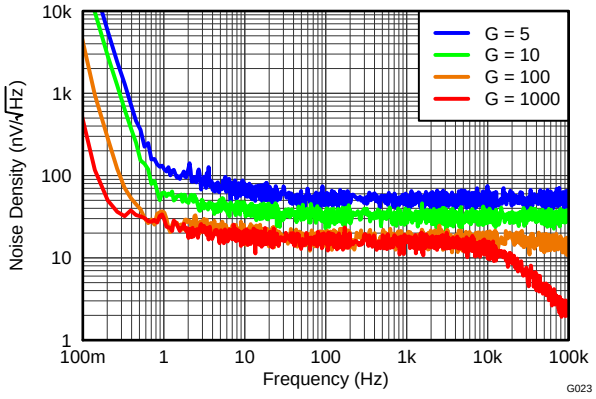

Figure 20. Voltage Noise Spectral Density vs Frequency (RTI)

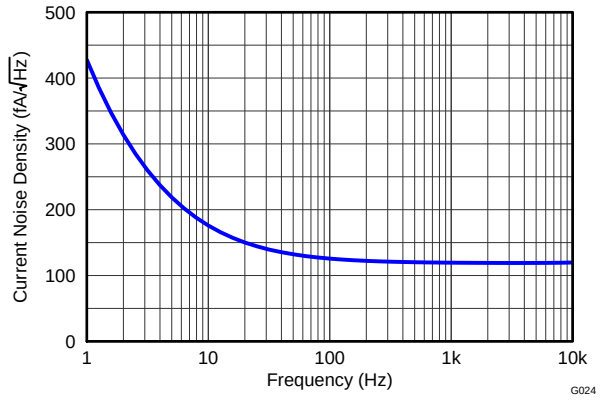

Figure 21. Current Noise Spectral Density vs Frequency (RTI)

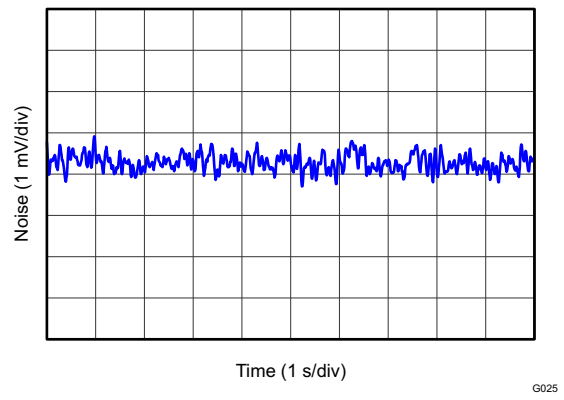

Figure 22. 0.1-Hz to 10-Hz RTI Voltage Noise (G = 5)

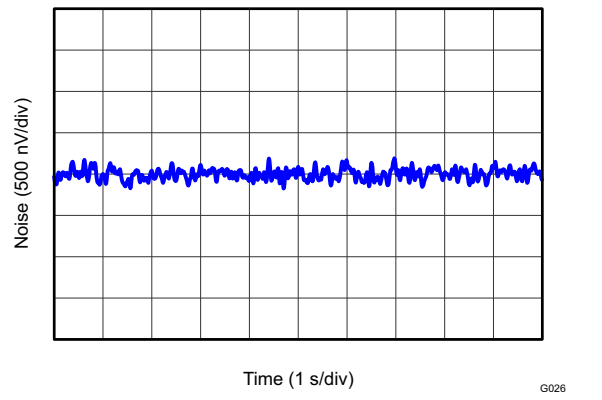

Figure 23. 0.1-Hz to 10-Hz RTI Voltage Noise (G = 1000)

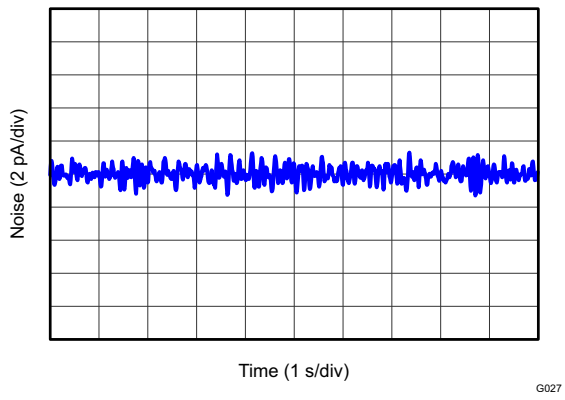

Figure 24. 0.1-Hz to 10-Hz RTI Current Noise

Copyright © 2012–2017, Texas Instruments Incorporated

Typical Characteristics (continued)

at T_A = +25°C, V_S = ±15 V, R_L = 10 kΩ, V_{REF} = 0 V, and G = 5 (unless otherwise noted)

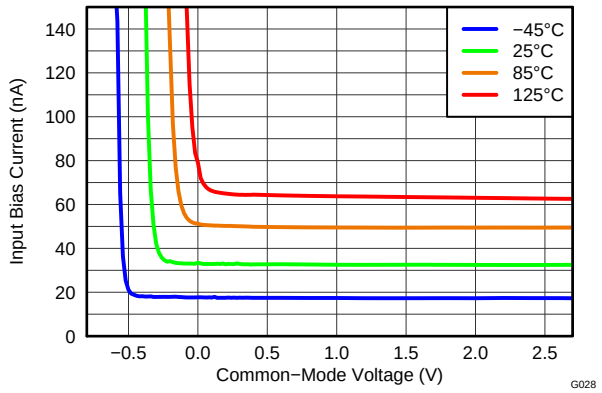

V_S = +2.7 V

Figure 25. Input Bias Current vs Common-Mode Voltage

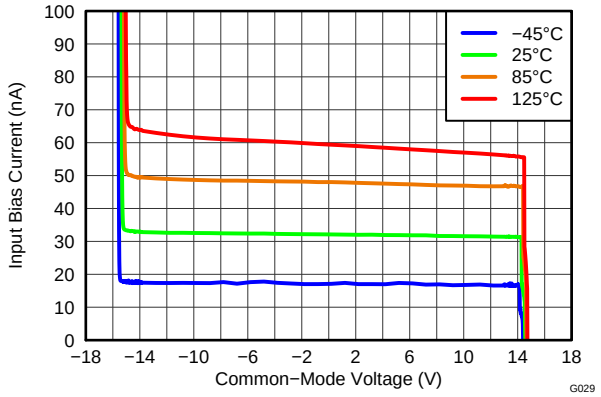

V_S = ±15 V

Figure 26. Input Bias Current vs Common-Mode Voltage

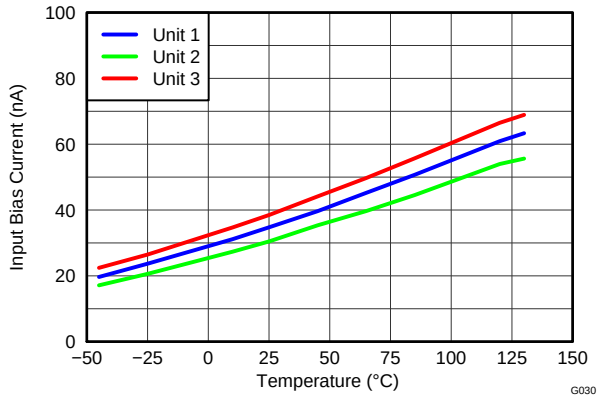

Figure 27. Input Bias Current vs Temperature

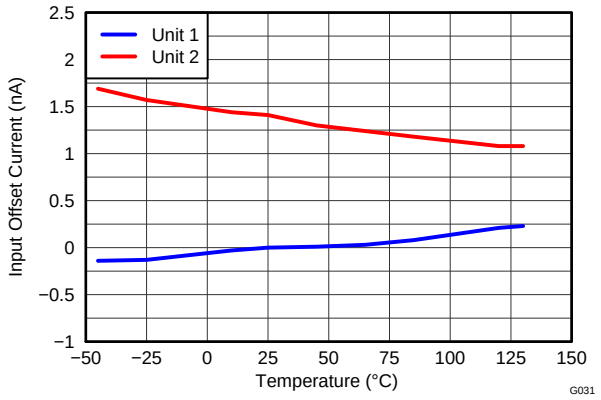

Figure 28. Input Offset Current vs Temperature

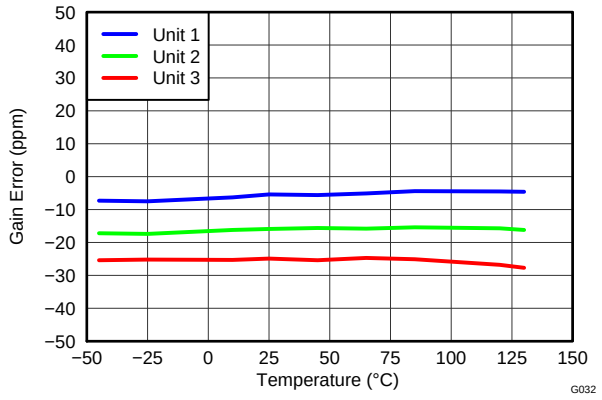

Figure 29. Gain Error vs Temperature (G = 5)

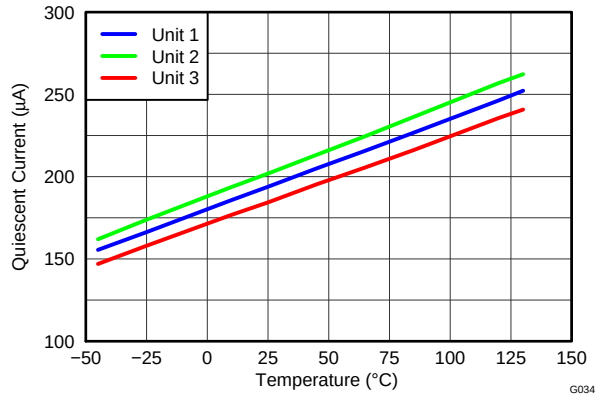

Figure 30. Supply Current vs Temperature

Typical Characteristics (continued)

at T_A = +25°C, V_S = ±15 V, R_L = 10 kΩ, V_{REF} = 0 V, and G = 5 (unless otherwise noted)

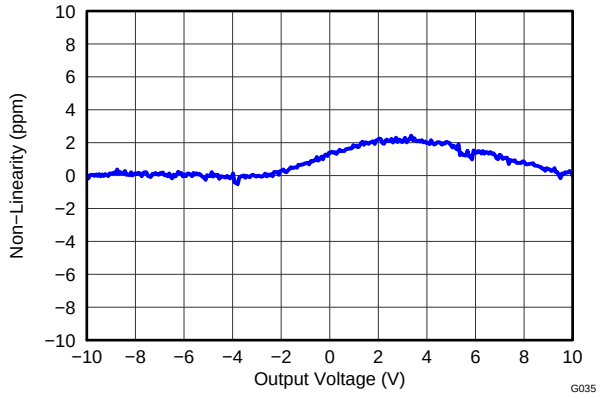

Figure 31. Gain Nonlinearity (G = 5)

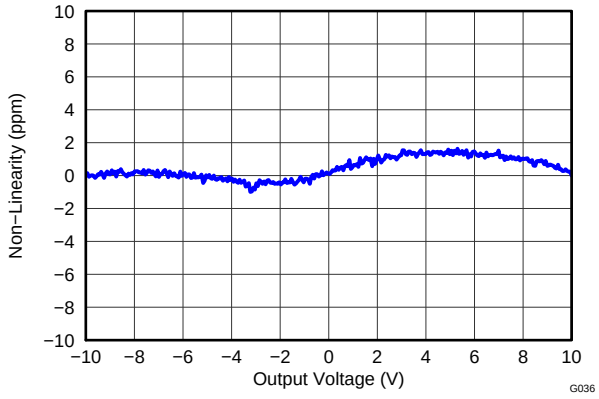

Figure 32. Gain Nonlinearity (G = 10)

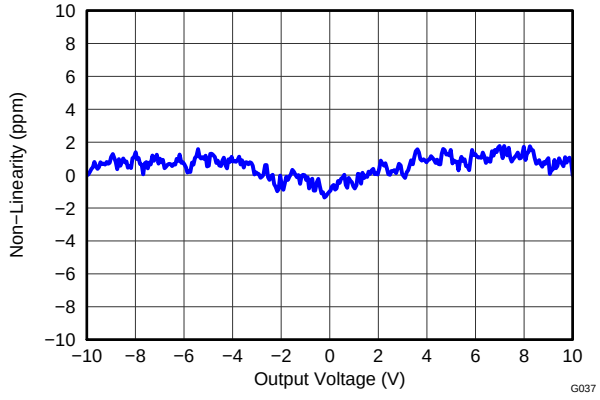

Figure 33. Gain Nonlinearity (G = 100)

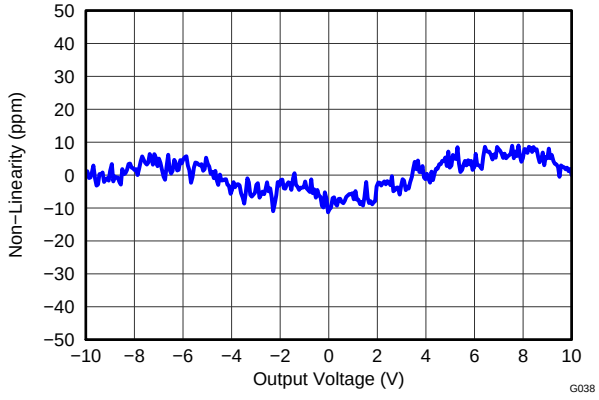

Figure 34. Gain Nonlinearity (G = 1000)

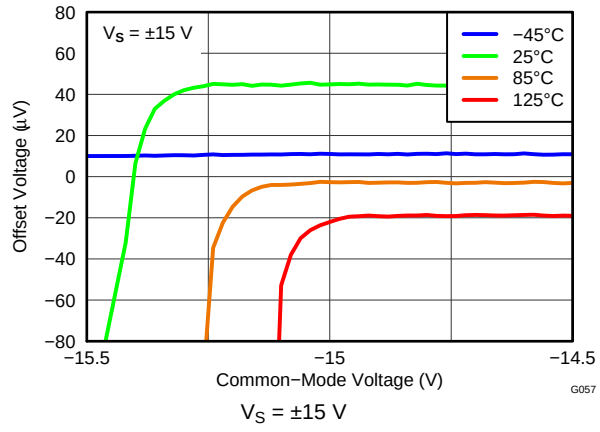

Figure 35. Offset Voltage vs Negative Common-Mode Voltage

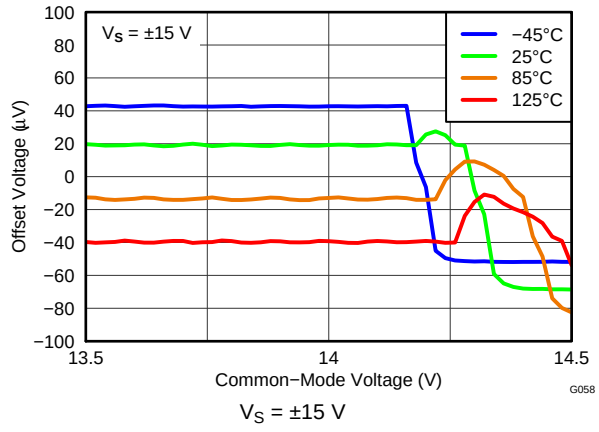

Figure 36. Offset Voltage vs Positive Common-Mode Voltage

Copyright © 2012–2017, Texas Instruments Incorporated

Typical Characteristics (continued)

at T_A = +25°C, V_S = ±15 V, R_L = 10 kΩ, V_{REF} = 0 V, and G = 5 (unless otherwise noted)

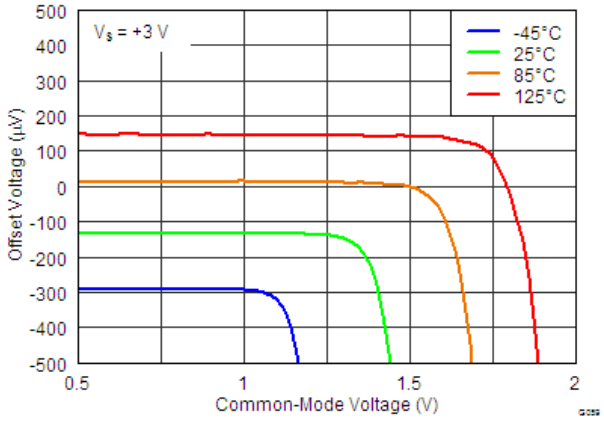

V_S = +3 V

Figure 37. Offset Voltage vs Negative Common-Mode Voltage

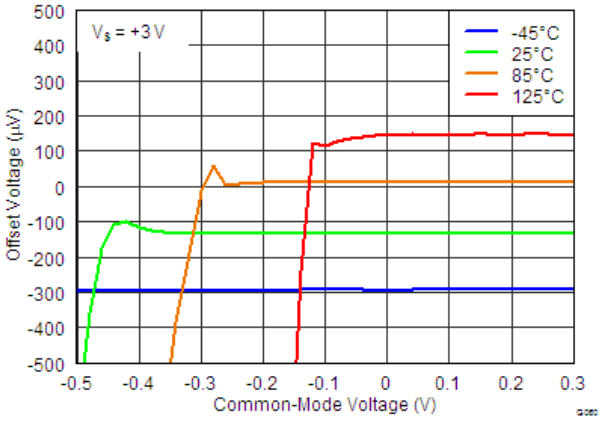

V_S = +3 V

Figure 38. Offset Voltage vs Positive Common-Mode Voltage

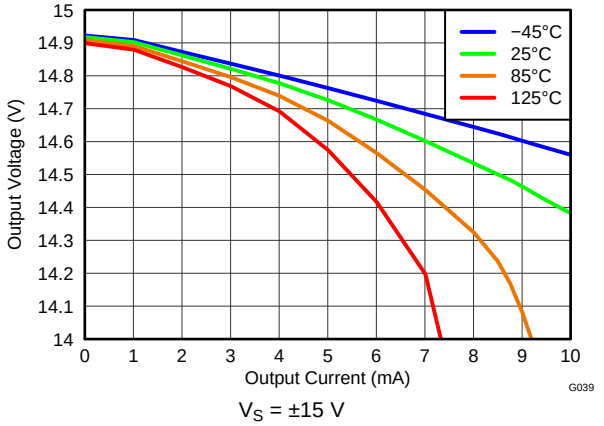

V_S = ±15 V

Figure 39. Positive Output Voltage Swing vs Output Current

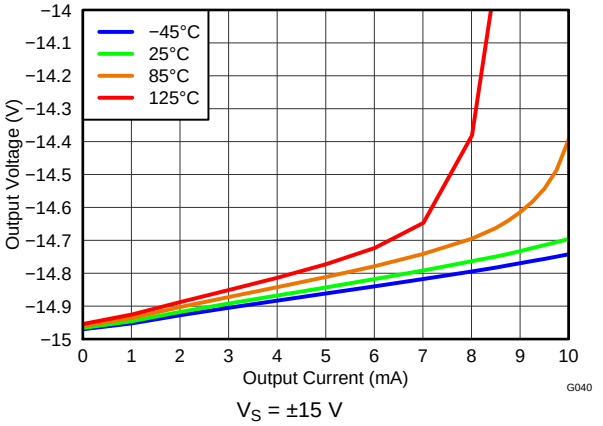

V_S = ±15 V

Figure 40. Negative Output Voltage Swing vs Output Current

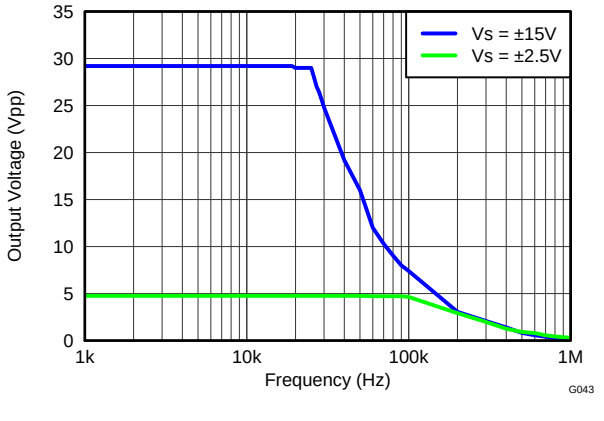

Figure 41. Large-Signal Frequency Response

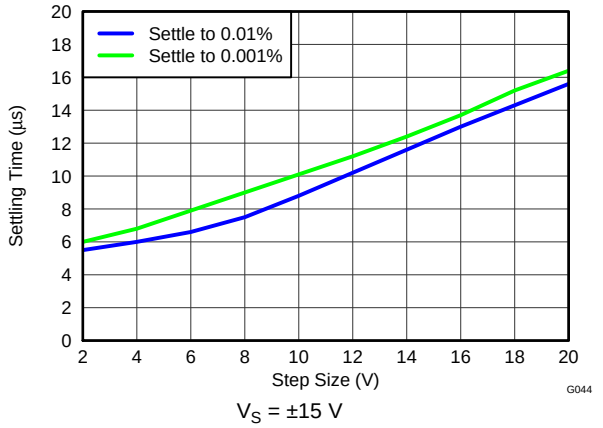

V_S = ±15 V

Figure 42. Settling Time vs Step Size

Typical Characteristics (continued)

at T_A = +25°C, V_S = ±15 V, R_L = 10 kΩ, V_{REF} = 0 V, and G = 5 (unless otherwise noted)

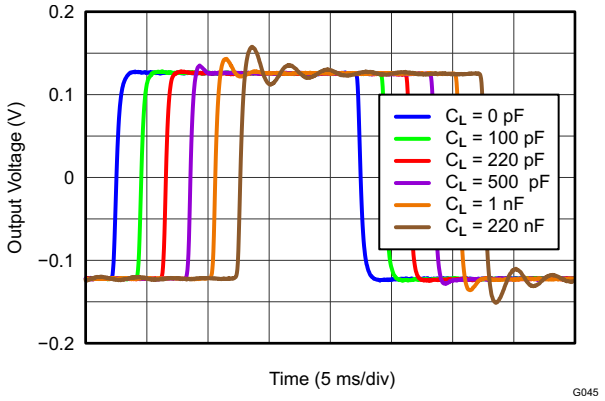

Figure 43. Small-Signal Response Over Capacitive Loads (G = 5)

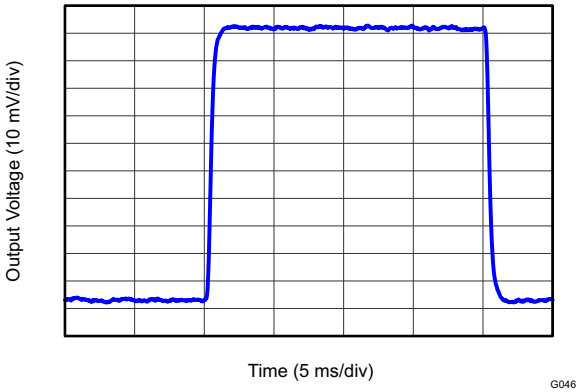

G = 5, R_L = 1 kΩ, C_L = 100 pF

Figure 44. Small-Signal Response

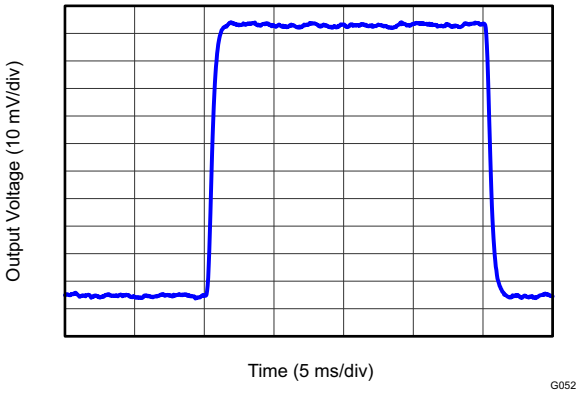

G = 10, R_L = 10 kΩ, C_L = 100 pF

Figure 45. Small-Signal Response

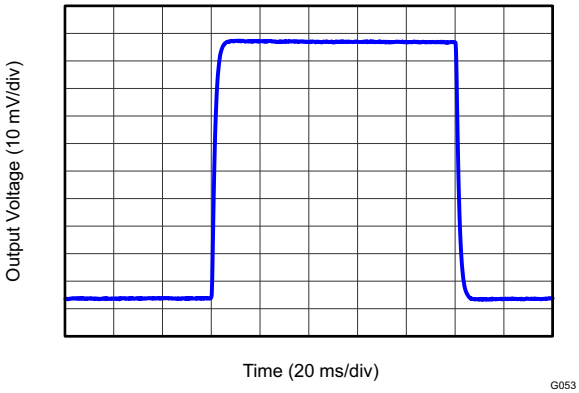

G = 100, R_L = 10 kΩ, C_L = 100 pF

Figure 46. Small-Signal Response

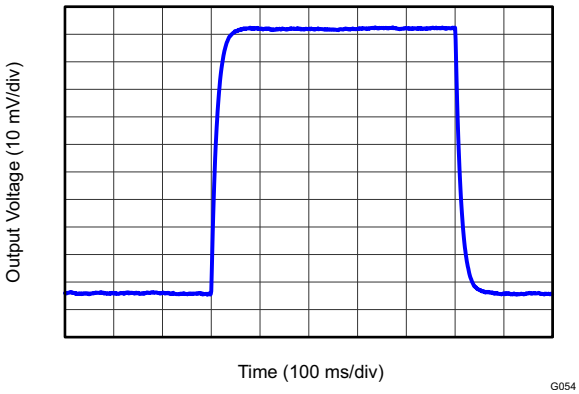

G = 1000, R_L = 10 kΩ, C_L = 100 pF

Figure 47. Small-Signal Response

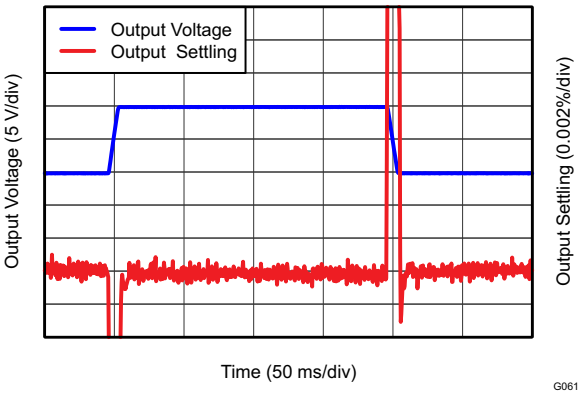

G = 5, R_L = 10 kΩ, C_L = 100 pF

Figure 48. Large-Signal Response and Settling Time

Copyright © 2012–2017, Texas Instruments Incorporated

Typical Characteristics (continued)

at T_A = +25°C, V_S = ±15 V, R_L = 10 kΩ, V_{REF} = 0 V, and G = 5 (unless otherwise noted)

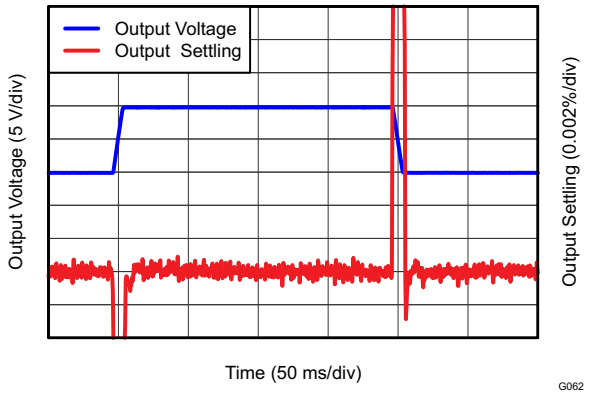

G = 10, R_L = 10 kΩ, C_L = 100 pF

Figure 49. Large-Signal Response and Settling Time

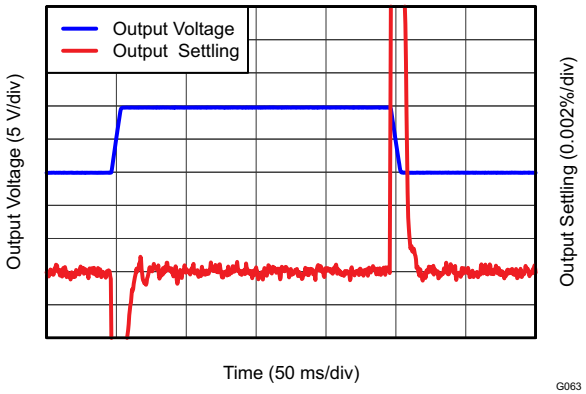

G = 100, R_L = 10 kΩ, C_L = 100 pF

Figure 50. Large-Signal Response and Settling Time

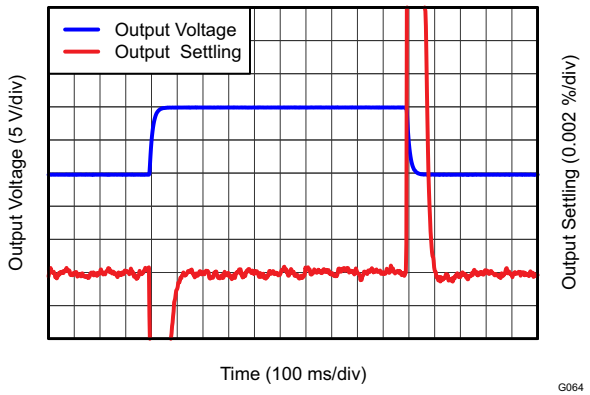

G = 1000, R_L = 10 kΩ, C_L = 100 pF

Figure 51. Large-Signal Response and Settling Time

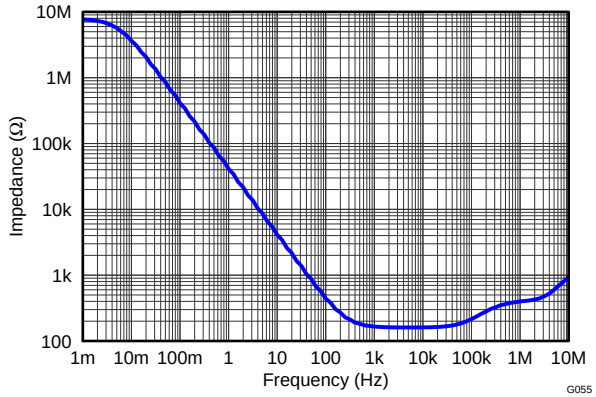

Figure 52. Open-Loop Output Impedance

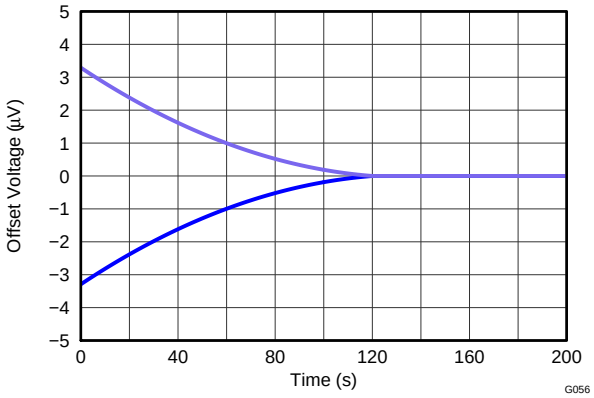

Figure 53. Change In Input Offset Voltage vs Warm-Up Time

7 Detailed Description

7.1 Overview

The INA827 is a monolithic instrumentation amplifier (INA) based on a 36-V and a current feedback input architecture. The INA827 also integrates laser-trimmed resistors to ensure excellent common mode rejection and low gain error. The combination of the current feedback input and the precision resistors allows this device to achieve outstanding dc precision as well as frequency response and high frequency common mode rejection(TBD this is more like a Layout text. Overview is generally an overview of the device.)

The Overview section provides a top-level description of what the device is and what it does. Detailed descriptions of the features and functions appear in subsequent subsections. Guidelines ● Include a summary of standards met by the device (if any). ● List modes and states of operation (from the user's perspective) and key features within each functional mode for quick reference. Use the following sections to provide detail on these modes and features.

7.2 Functional Block Diagram

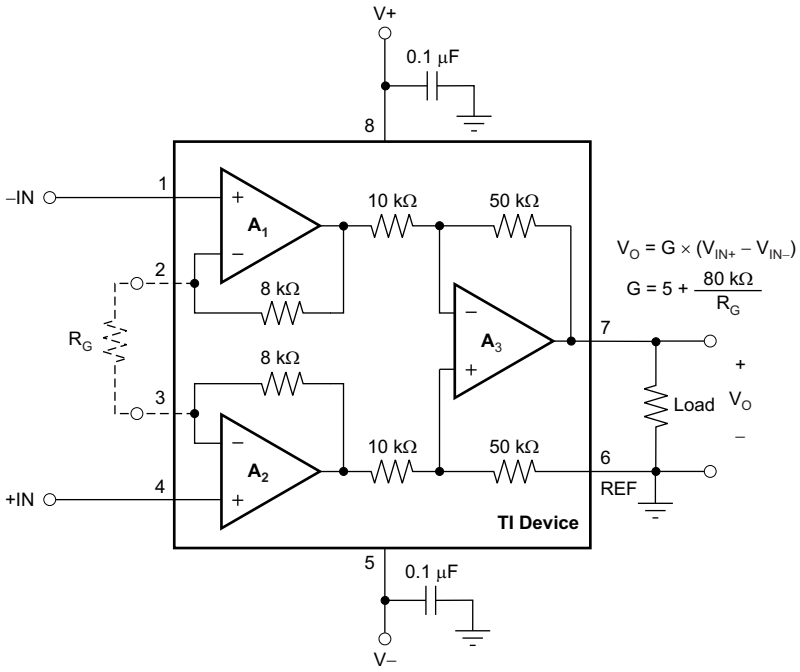

Copyright © 2016, Texas Instruments Incorporated

Figure 54. INA827 Block Diagram

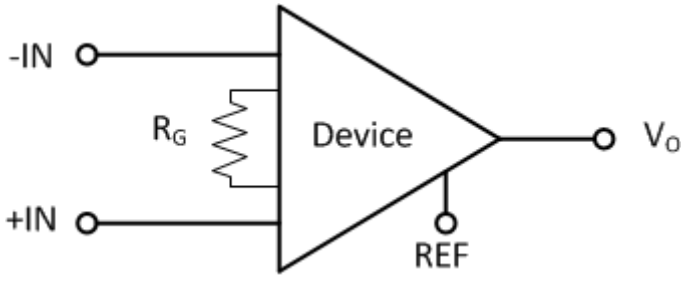

Figure 55. Simplified Block Diagram (TBD only simplified op amp goes here but this is a PNG and I can't edit it)

Copyright © 2012–2017, Texas Instruments Incorporated

7.3 Feature Description

7.3.1 Setting the Gain

Device gain is set by a single external resistor (R_G), connected between pins 2 and 3. The value of R_G is selected according to Equation 1:

$$5 + \left[\frac{80\ k\Omega}{R_G}\right] \quad (1)$$

Table 1 lists several commonly-used gains and resistor values. The on-chip resistors are laser-trimmed to accurate absolute values. The accuracy and temperature coefficients of these resistors are included in the gain accuracy and drift specifications of the INA827.

Table 1. Commonly-Used Gains and Resistor Values

DESIRED GAIN (V/V)	R_G (Ω)	NEAREST 1% R_G (Ω)
5	—	—
10	16.00k	15.8k
20	5.333k	5.36k
50	1.778k	1.78k
100	842.1	845
200	410.3	412
500	161.6	162
1000	80.40	80.6

7.3.1.1 Gain Drift

The stability and temperature drift of the external gain setting resistor (R_G) also affects gain. The R_G contribution to gain accuracy and drift can be directly inferred from the gain of Equation 1.

The best gain drift of 1 ppm per degree Celsius can be achieved when the INA827 uses G = 5 without R_G connected. In this case, the gain drift is limited only by the slight temperature coefficient mismatch of the integrated 50-kΩ resistors in the differential amplifier (A_3). At gains greater than 5, the gain drift increases as a result of the individual drift of the resistors in the feedback of A_1 and A_2, relative to the drift of the external gain resistor R_G. Process improvements to the temperature coefficient of the feedback resistors now enable a maximum gain drift of the feedback resistors to be specified at 35 ppm per degree Celsius, thus significantly improving the overall temperature stability of applications using gains greater than 5.

Low resistor values required for high gains can make wiring resistance important. Sockets add to wiring resistance and contribute additional gain error (such as possible unstable gain errors) at gains of approximately 100 or greater. To ensure stability, avoid parasitic capacitances greater than a few picofarads at R_G connections. Careful matching of any parasitics on both R_G pins maintains optimal CMRR over frequency; see the *Typical Characteristics* section.

Copyright © 2012–2017, Texas Instruments Incorporated

7.3.2 Offset Trimming

Most applications require no external offset adjustment; however, if necessary, adjustments can be made by applying a voltage to the REF pin. Figure 56 shows an optional circuit for trimming the output offset voltage. The voltage applied to the REF pin is summed at the output. The op amp buffer provides low impedance at the REF pin to preserve good common-mode rejection.

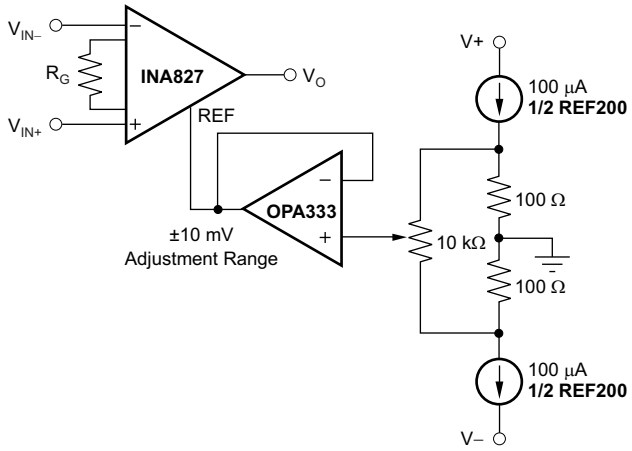

Copyright © 2016, Texas Instruments Incorporated

Figure 56. Optional Trimming of Output Offset Voltage

7.3.3 Input Common-Mode Range

The linear input voltage range of the INA827 input circuitry extends from the negative supply voltage to 1 V below the positive supply, and maintains 88-dB (minimum) common-mode rejection throughout this range. The common-mode range for most common operating conditions is described in Figure 14 and Figure 35 through Figure 38. The INA827 can operate over a wide range of power supplies and V_{REF} configurations, thus making a comprehensive guide to common-mode range limits for all possible conditions impractical to provide.

The most commonly overlooked overload condition occurs when a circuit exceeds the output swing of A_1 and A_2, which are internal circuit nodes that cannot be measured. Calculating the expected voltages at the output of A_1 and A_2 (see Figure 57) provides a check for the most common overload conditions. The A_1 and A_2 designs are identical and the outputs can swing to within approximately 100 mV of the power-supply rails. For example, when the A_2 output is saturated, A_1 can continue to be in linear operation and responding to changes in the noninverting input voltage. This difference can give the appearance of linear operation but the output voltage is invalid.

A single-supply instrumentation amplifier has special design considerations. To achieve a common-mode range that extends to single-supply ground, the INA827 employs a current-feedback topology with PNP input transistors; see Figure 57. The matched PNP transistors (Q_1 and Q_2) shift the input voltages of both inputs up by a diode drop and (through the feedback network) shift the output of A_1 and A_2 by approximately +0.8 V. With both inputs and V_{REF} at single-supply ground (negative power supply), the output of A_1 and A_2 is well within the linear range, allowing differential measurements to be made at the GND level. As a result of this input level-shifting, the voltages at pins 2 and 3 are not equal to the respective input pin voltages (pins 1 and 4). For most applications, this inequality is not important because only the gain-setting resistor connects to these pins.

Copyright © 2012–2017, Texas Instruments Incorporated

7.3.4 Inside the INA827

See Figure 61 for a simplified representation of the INA827. A more detailed diagram (shown in Figure 57) provides additional insight into the INA827 operation.

Each input is protected by two field-effect transistors (FETs) that provide a low series resistance under normal signal conditions and preserve excellent noise performance. When excessive voltage is applied, these transistors limit input current to approximately 8 mA.

The differential input voltage is buffered by Q_1 and Q_2 and is applied across R_G, causing a signal current to flow through R_G, R_1, and R_2. The output difference amplifier (A_3) removes the common-mode component of the input signal and refers the output signal to the REF pin.

The equations shown in Figure 57 describe the output voltages of A_1 and A_2. The V_{BE} and voltage drop across R_1 and R_2 produce output voltages on A_1 and A_2 that are approximately 0.8 V higher than the input voltages.

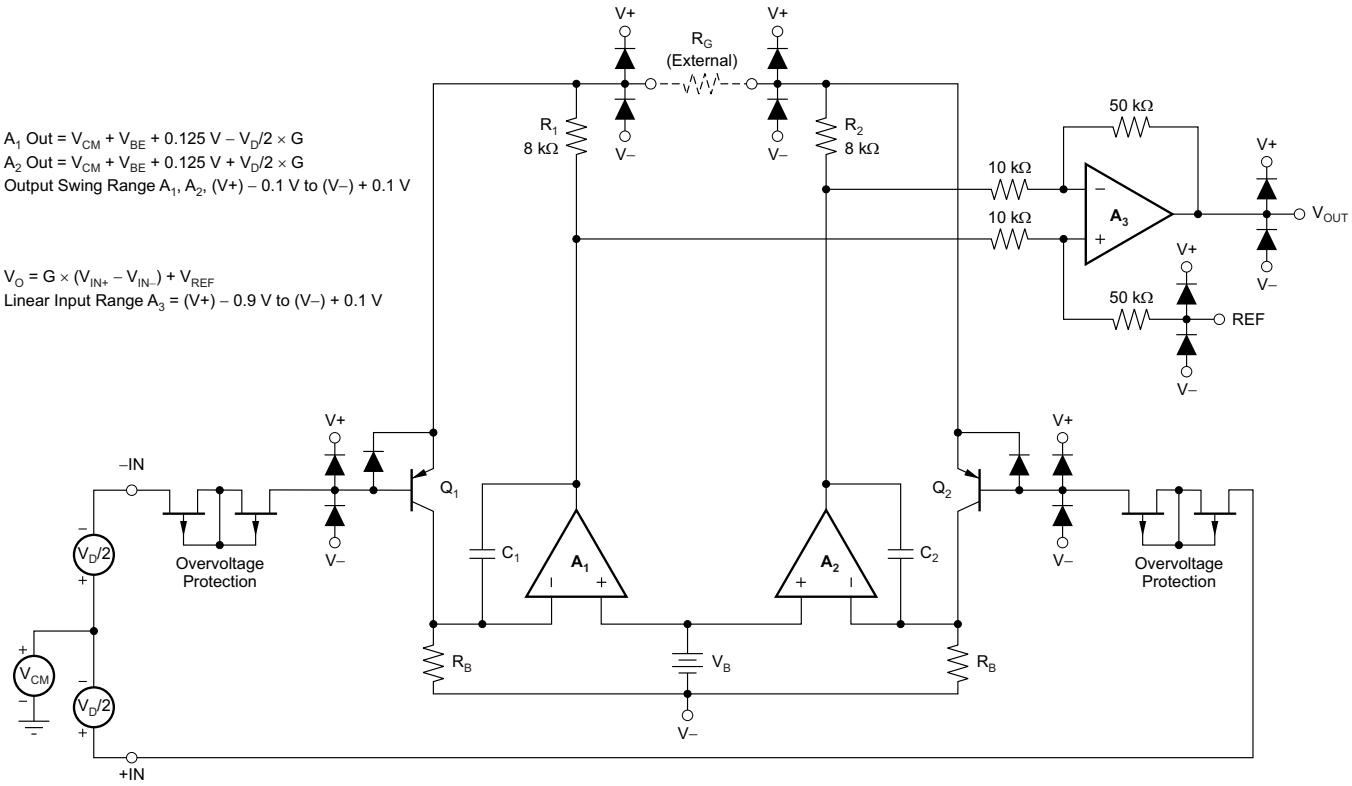

Figure 57. INA827 Simplified Circuit Diagram

7.3.5 Input Protection

The INA827 inputs are individually protected for voltages up to ±40 V. For example, a condition of –40 V on one input and +40 V on the other input does not cause damage. However, if the input voltage exceeds [(V–) – 2 V] and the signal source current drive capability exceeds 3.5 mA, the output voltage switches to the opposite polarity; see Figure 14. This polarity reversal can easily be avoided by adding a 10-kΩ resistance in series with both inputs.

Internal circuitry on each input provides low series impedance under normal signal conditions. If the input is overloaded, the protection circuitry limits the input current to a safe value of approximately 8 mA. Figure 14 illustrates this input current limit behavior. The inputs are protected even if the power supplies are disconnected or turned off.

Copyright © 2012–2017, Texas Instruments Incorporated

7.3.6 Input Bias Current Return Path

The INA827 input impedance is extremely high—approximately 20 GΩ. However, a path must be provided for the input bias current of both inputs. This input bias current is typically 35 nA. High input impedance means that this input bias current changes very little with varying input voltage.

Input circuitry must provide a path for this input bias current for proper operation. Figure 58 shows various provisions for an input bias current path. Without a bias current path, the inputs float to a potential that exceeds the INA827 common-mode range, and the input amplifiers saturate. If the differential source resistance is low, the bias current return path can be connected to one input (as shown in the thermocouple example in Figure 58). With higher source impedance, using two equal resistors provides a balanced input with possible advantages of lower input offset voltage as a result of bias current and better high-frequency common-mode rejection.

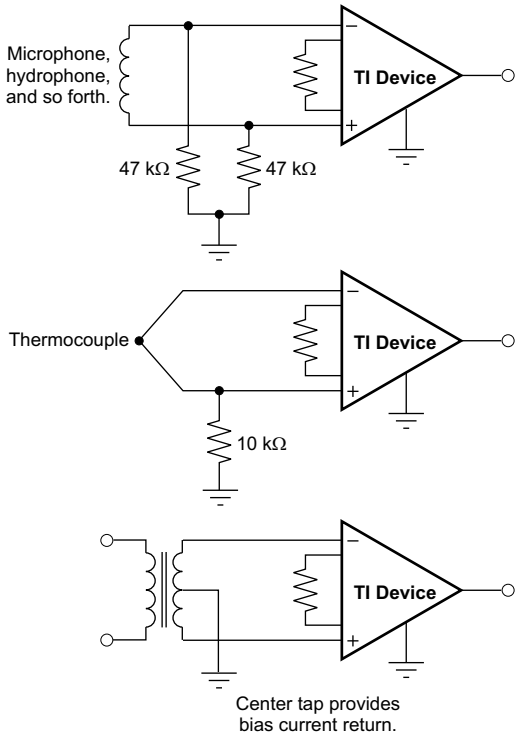

Copyright © 2016, Texas Instruments Incorporated

Figure 58. Providing an Input Common-Mode Current Path

Copyright © 2012–2017, Texas Instruments Incorporated

7.3.7 Reference Pin

The INA827 output voltage is developed with respect to the voltage on the reference pin. Often, in dual-supply operation, the reference pin (pin 6) is connected to the low-impedance system ground. Offsetting the output signal to a precise mid-supply level (for example, 2.5 V in a 5-V supply environment) can be useful in single-supply operation. The signal can be shifted by applying a voltage to the device REF pin, which can be useful when driving a single-supply ADC.

For best performance, keep any source impedance to the REF pin below 5 Ω. Referring to Figure 61, the reference resistor is at one end of a 50-kΩ resistor. Additional impedance at the REF pin adds to this 50-kΩ resistor. The imbalance in resistor ratios results in degraded common-mode rejection ratio (CMRR).

Figure 59 shows two different methods of driving the reference pin with low impedance. The OPA330 is a low-power, chopper-stabilized amplifier and therefore offers excellent stability over temperature. The OPA330 is available in the space-saving SC70 and even smaller chip-scale package. The REF3225 is a precision reference in a small SOT23-6 package.

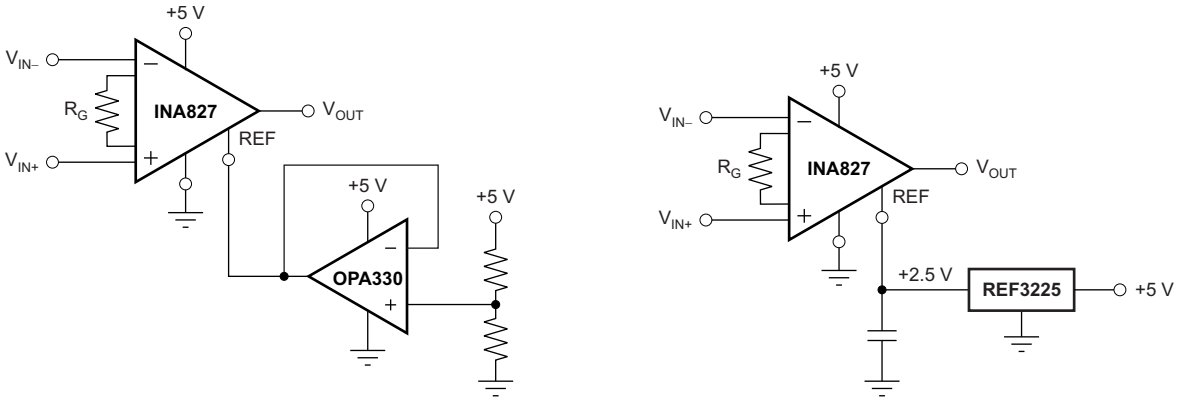

a) Level shifting using the OPA330 as a low-impedance buffer

b) Level shifting using the low-impedance output of the REF3225

Copyright © 2016, Texas Instruments Incorporated

Figure 59. Options for Low-Impedance Level Shifting

7.3.8 Dynamic Performance

Figure 19 illustrates that, despite having low quiescent current of only 200 µA, the INA827 achieves much wider bandwidth than other instrumentation amplifiers (INAs) in its class. This achievement is a result of using TI's proprietary high-speed precision bipolar process technology. The current-feedback topology provides the INA827 with wide bandwidth even at high gains. Settling time also remains excellent at high gain because of a 1.5-V/µs high slew rate.

7.3.9 Operating Voltage

The INA827 operates over a power-supply range of +3 V to +36 V (±1.5 V to ±18 V). Supply voltages higher than 40 V (±20 V) can permanently damage the device. Parameters that vary over supply voltage or temperature are shown in the *Typical Characteristics* section.

7.3.9.1 Low-Voltage Operation

The INA827 can operate on power supplies as low as ±1.5 V. Most parameters vary only slightly throughout this supply voltage range; see the *Typical Characteristics* section. Operation at very low supply voltage requires careful attention to assure that the input voltages remain within the linear range. Voltage swing requirements of the internal nodes limit the input common-mode range with low power-supply voltage. Figure 7 to Figure 13 and Figure 35 to Figure 38 describe the linear operation range for various supply voltages, reference connections, and gains.

7.3.10 Error Sources

Most modern signal-conditioning systems calibrate errors at room temperature. However, calibration of errors that result from a change in temperature is normally difficult and costly. Therefore, these errors must be minimized by choosing high-precision components such as the INA827 that have improved specifications in critical areas that effect overall system precision. Figure 60 shows an example application.

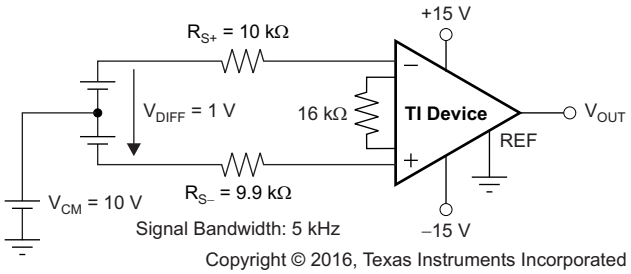

Figure 60. Example Application With G = 10 V/V and 1-V Differential Voltage

Copyright © 2012–2017, Texas Instruments Incorporated

Resistor-adjustable INAs such as the INA827 yield the lowest gain error at G = 5 because of the inherently well-matched drift of the internal resistors of the differential amplifier. At gains greater than 5 (for instance, G = 10 V/V or G = 100 V/V) gain error becomes a significant error source because of the resistor drift contribution of the feedback resistors in conjunction with the external gain resistor. Except for very high gain applications, gain drift is by far the largest error contributor compared to other drift errors (such as offset drift). The INA827 offers the lowest gain error over temperature in the marketplace for both G > 5 and G = 5 (no external gain resistor). Table 2 summarizes the major error sources in common INA applications and compares the two cases of G = 5 (no external resistor) and G = 10 (with a 16-kΩ external resistor). As shown in Table 2, although the static errors (absolute accuracy errors) in G = 5 are almost twice as great as compared to G = 10, there is a great reduction in drift errors because of the significantly lower gain error drift. In most applications, these static errors can readily be removed during calibration in production. All calculations refer the error to the input for easy comparison and system evaluation.

Table 2. Error Calculation

ERROR SOURCE	ERROR CALCULATION	INA827		
		SPECIFICATION	G = 10 ERROR (ppm)	G = 1 ERROR (ppm)
ABSOLUTE ACCURACY AT +25°C				
Input offset voltage (µV)	V_{OSI} / V_{DIFF}	150	150	150
Output offset voltage (µV)	V_{OSO} / (G × V_{DIFF})	2000	200	400
Input offset current (nA)	I_{OS} × maximum (R_{S+}, $R_{S–}$) / V_{DIFF}	5	50	50
CMRR (dB)	V_{CM} / ($10^{CMRR / 20}$ × V_{DIFF})	94 (G = 10), 88 (G = 5)	200	398
Total absolute accuracy error (ppm)			600	998
DRIFT TO +105°C				
Gain drift (ppm/°C)	GTC × (T_A – 25)	25 (G = 10), 1 (G = 5)	2000	80
Input offset voltage drift (µV/°C)	(V_{OSI_TC} / V_{DIFF}) × (T_A – 25)	5	200	200
Output offset voltage drift (µV/°C)	[V_{OSO_TC} / (G × V_{DIFF})] × (T_A – 25)	30	240	240
Total drift error (ppm)			2440	760
RESOLUTION				
Gain nonlinearity (ppm of FS)		5	5	5
Voltage noise (1 kHz)	$\sqrt{BW} \times \sqrt{(e_{NI}^2 + \left(\frac{e_{NO}}{G}\right)^2}$ × $\frac{6}{V_{DIFF}}$	e_{NI} = 17, e_{NO} = 250	6	6
Total resolution error (ppm)			11	11
TOTAL ERROR				
Total error	Total error = sum of all error sources		3051	1769

7.4 Device Functional Modes

The INA827 has a single functional mode and is operational when the power-supply voltage is greater than 3 V (±1.5 V). The maximum power-supply voltage for the INA827 is 36 V (±18 V).

Copyright © 2012–2017, Texas Instruments Incorporated

8 Application and Implementation

NOTE

Information in the following applications sections is not part of the TI component specification, and TI does not warrant its accuracy or completeness. TI's customers are responsible for determining suitability of components for their purposes. Customers should validate and test their design implementation to confirm system functionality.

8.1 Application Information

Figure 61 shows the basic connections required for device operation. Good layout practice mandates that bypass capacitors are placed as close to the device pins as possible.

The INA827 output is referred to the output reference (REF) pin, which is normally grounded. This connection must be low-impedance to assure good common-mode rejection. Although 5 Ω or less of stray resistance can be tolerated when maintaining specified CMRR, small stray resistances of tens of ohms in series with the REF pin can cause noticeable degradation in CMRR.

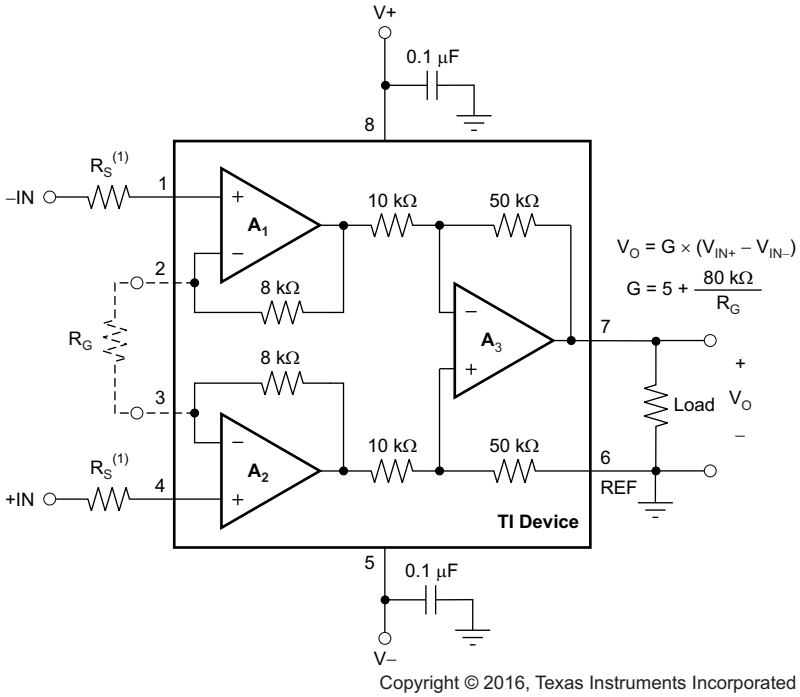

Copyright © 2016, Texas Instruments Incorporated

(1) This resistor is optional if the input voltage remains above [(V–) – 2 V] or if the signal source current drive capability is limited to less than 3.5 mA. See the *Input Protection* section for more details.

Figure 61. Basic Connections

Copyright © 2012–2017, Texas Instruments Incorporated

8.2 Typical Application

An example programmable logic controller (PLC) input application using an INA827 is shown in Figure 62.

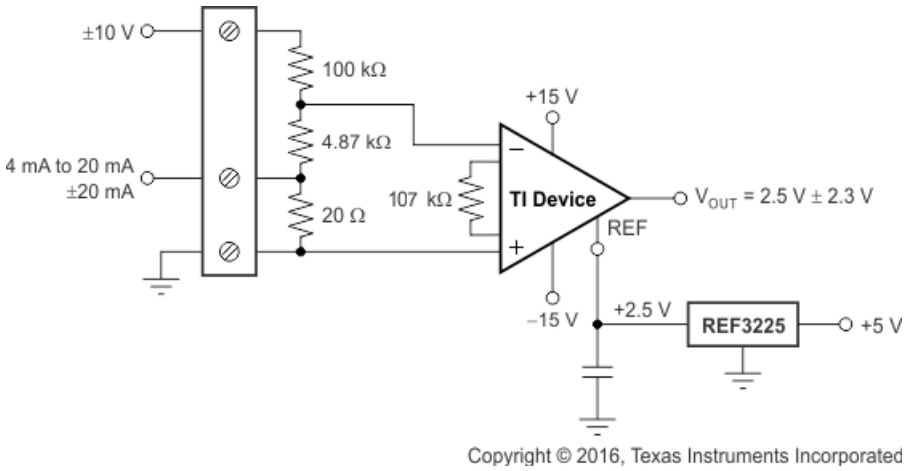

Figure 62. ±10-V, 4-mA to 20-mA PLC Input

8.2.1 Design Requirements

This design has these requirements:

- Supply voltage: ±15 V, 5 V
- Inputs: ±10 V, ±20 mA
- Output: 2.5 V, ±2.3 V

8.2.2 Detailed Design Procedure

There are two modes of operation for the circuit shown in Figure 62: current input and voltage input. This design requires $R_1 >> R_2 >> R_3$. Given this relationship, the current input mode transfer function is given by Equation 2.

$$V_{OUT-I} = V_D \times G + V_{REF} = -(I_{IN} \times R_3) \times G + V_{REF} \quad (2)$$

where

- G represents the gain of the instrumentation amplifier

The transfer function for the voltage input mode is shown by Equation 3.

$$V_{OUT-V} = V_D \times G + V_{REF} = -\left(V_{IN} \times \frac{R_2}{R_1 + R_2}\right) \times G + V_{REF} \quad (3)$$

R_1 sets the input impedance of the voltage input mode. The minimum typical input impedance is 100 kΩ. 100 kΩ is selected for R_1 because increasing the R_1 value also increases noise. The value of R_3 must be extremely small compared to R_1 and R_2. 20 Ω for R_3 is selected because that resistance value is much smaller than R_1 and yields an input voltage of ±400 mV when operated in current mode (±20 mA).

Equation 4 can be used to calculate R_2 given V_D = ±400 mV, V_{IN} = ±10 V, and R_1 = 100 kΩ.

$$V_D = V_{IN} \times \frac{R_2}{R_1 + R_2} \rightarrow R_2 = \frac{R_1 \times V_D}{V_{IN} - V_D} = 4.167\ k\Omega \quad (4)$$

The value obtained from Equation 4 is not a standard 0.1% value, so 4.12 kΩ is selected. R_1 and R_2 also use 0.1% tolerance resistors to minimize error.

The ideal gain of the instrumentation amplifier is calculated with Equation 5.

$$G = \frac{V_{OUT} - V_{REF}}{V_D} = \frac{4.8\ V - 2.5\ V}{400\ mV} = 5.75\ \frac{V}{V} \quad (5)$$

Typical Application (continued)

Using the INA827 gain equation, the gain-setting resistor value is calculated as shown by Equation 6.

$$G_{INA827} = 5 + \frac{80\,k\Omega}{R_G} \rightarrow RG = \frac{80\,k\Omega}{G_{INA827} - 5} = \frac{80\,k\Omega}{5.75 - 5} = 107\,k\Omega \quad (6)$$

107 kΩ is a standard 0.1% resistor value that can be used in this design. Finally, the output RC filter components are selected to have a –3-dB cutoff frequency of 1 MHz.

8.2.3 Application Curves

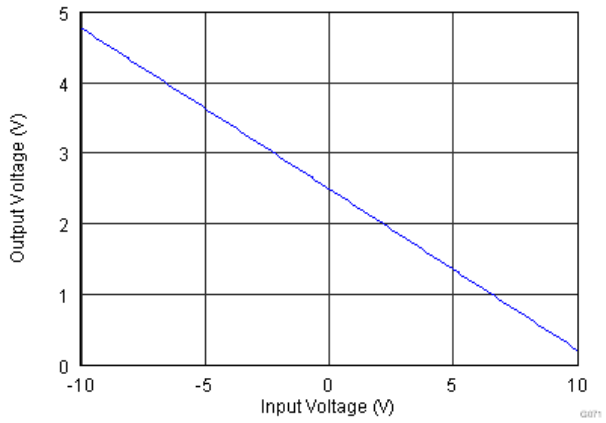

Figure 63. PLC Output Voltage vs Input Voltage

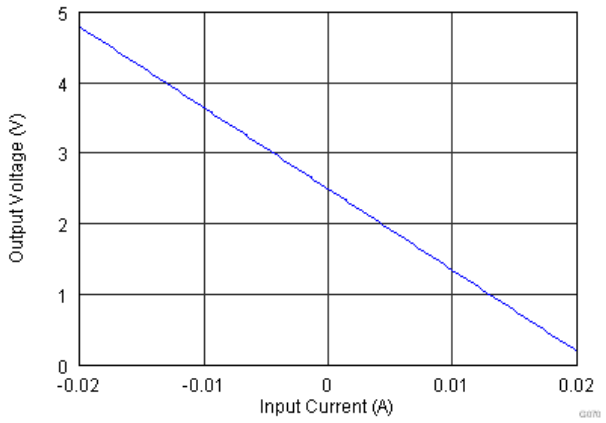

Figure 64. PLC Output Voltage vs Input Current

Copyright © 2012–2017, Texas Instruments Incorporated

9 Power Supply Recommendations

The nominal performance of the INA827 is specified with a supply voltage of ±15 V and a mid-supply reference voltage. The device can also be operated using power supplies from ±1.5 V (3 V) to ±18 V (36 V) and non mid-supply reference voltages with excellent performance. Parameters that can vary significantly with operating voltage and reference voltage are illustrated in the *Typical Characteristics* section.

10 Layout

10.1 Layout Guidelines

Attention to good layout practices is always recommended. Keep traces short and, when possible, use a printed circuit board (PCB) ground plane with surface-mount components placed as close to the device pins as possible. Place 0.1-μF bypass capacitors close to the supply pins. Apply these guidelines throughout the analog circuit to improve performance and provide benefits such as reducing the electromagnetic-interference (EMI) susceptibility.

10.1.1 CMRR vs Frequency

The INA827 pinout is optimized for achieving maximum CMRR performance over a wide range of frequencies. However, care must be taken to ensure that both input paths are well-matched for source impedance and capacitance to avoid converting common-mode signals into differential signals. In addition, parasitic capacitance at the gain-setting pins can also affect CMRR over frequency. For example, in applications that implement gain switching using switches or PhotoMOS® relays to change the value of R_G, choose the component so that the switch capacitance is as small as possible.

10.2 Layout Example

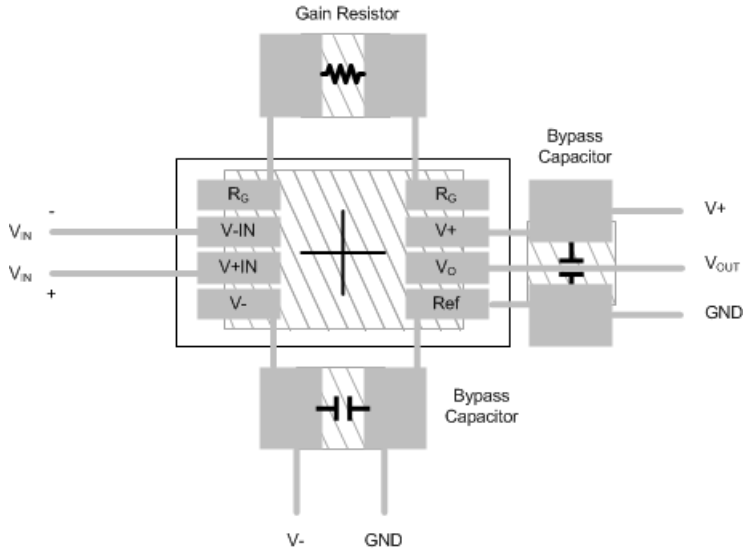

Figure 65. INA827 Example Layout

11 Device and Documentation Support

11.1 Documentation Support

11.1.1 Related Documentation

For related documentation see the following:

- *INA826 Precision, 200-μA Supply Current, 3-V to 36-V Supply Instrumentation Amplifier with Rail-to-Rail Output* (SBOS562)
- *OPAx330 50-μV VOS, 0.25-μV/°C, 35-μA CMOS Operational Amplifiers Zero-Drift Series* (SBOS432)
- *REF32xx 4ppm/°C, 100μA, SOT23-6 Series Voltage Reference* (SBVS058)
- TBD list anything else?

11.2 Receiving Notification of Documentation Updates

To receive notification of documentation updates, navigate to the device product folder on ti.com. In the upper right corner, click on *Alert me* to register and receive a weekly digest of any product information that has changed. For change details, review the revision history included in any revised document.

11.3 Community Resources

The following links connect to TI community resources. Linked contents are provided "AS IS" by the respective contributors. They do not constitute TI specifications and do not necessarily reflect TI's views; see TI's Terms of Use.

TI E2E™ Online Community ***TI's Engineer-to-Engineer (E2E) Community.*** Created to foster collaboration among engineers. At e2e.ti.com, you can ask questions, share knowledge, explore ideas and help solve problems with fellow engineers.

Design Support ***TI's Design Support*** Quickly find helpful E2E forums along with design support tools and contact information for technical support.

11.4 Trademarks

E2E is a trademark of Texas Instruments.
PhotoMOS is a registered trademark of Panasonic Electric Works Europe AG.
All other trademarks are the property of their respective owners.

11.5 Electrostatic Discharge Caution

This integrated circuit can be damaged by ESD. Texas Instruments recommends that all integrated circuits be handled with appropriate precautions. Failure to observe proper handling and installation procedures can cause damage.

ESD damage can range from subtle performance degradation to complete device failure. Precision integrated circuits may be more susceptible to damage because very small parametric changes could cause the device not to meet its published specifications.

11.6 Glossary

SLYZ022 — *TI Glossary*.

This glossary lists and explains terms, acronyms, and definitions.

12 Mechanical, Packaging, and Orderable Information

The following pages include mechanical, packaging, and orderable information. This information is the most current data available for the designated devices. This data is subject to change without notice and revision of this document. For browser-based versions of this data sheet, refer to the left-hand navigation.

Copyright © 2012–2017, Texas Instruments Incorporated

PACKAGING INFORMATION

Orderable Device	Status (1)	Package Type	Package Drawing	Pins	Package Qty	Eco Plan (2)	Lead/Ball Finish (6)	MSL Peak Temp (3)	Op Temp (°C)	Device Marking (4/5)	Samples
INA827AIDGK	ACTIVE	VSSOP	DGK	8	80	Green (RoHS & no Sb/Br)	NIPDAUAG	Level-2-260C-1 YEAR	-40 to 125	IPSI	Samples
INA827AIDGKR	ACTIVE	VSSOP	DGK	8	2500	Green (RoHS & no Sb/Br)	NIPDAUAG	Level-2-260C-1 YEAR	-40 to 125	IPSI	Samples

(1) The marketing status values are defined as follows:
ACTIVE: Product device recommended for new designs.
LIFEBUY: TI has announced that the device will be discontinued, and a lifetime-buy period is in effect.
NRND: Not recommended for new designs. Device is in production to support existing customers, but TI does not recommend using this part in a new design.
PREVIEW: Device has been announced but is not in production. Samples may or may not be available.
OBSOLETE: TI has discontinued the production of the device.

(2) **RoHS:** TI defines "RoHS" to mean semiconductor products that are compliant with the current EU RoHS requirements for all 10 RoHS substances, including the requirement that RoHS substance do not exceed 0.1% by weight in homogeneous materials. Where designed to be soldered at high temperatures, "RoHS" products are suitable for use in specified lead-free processes. TI may reference these types of products as "Pb-Free".
RoHS Exempt: TI defines "RoHS Exempt" to mean products that contain lead but are compliant with EU RoHS pursuant to a specific EU RoHS exemption.
Green: TI defines "Green" to mean the content of Chlorine (Cl) and Bromine (Br) based flame retardants meet JS709B low halogen requirements of <=1000ppm threshold. Antimony trioxide based flame retardants must also meet the <=1000ppm threshold requirement.

(3) MSL, Peak Temp. - The Moisture Sensitivity Level rating according to the JEDEC industry standard classifications, and peak solder temperature.

(4) There may be additional marking, which relates to the logo, the lot trace code information, or the environmental category on the device.

(5) Multiple Device Markings will be inside parentheses. Only one Device Marking contained in parentheses and separated by a "~" will appear on a device. If a line is indented then it is a continuation of the previous line and the two combined represent the entire Device Marking for that device.

(6) Lead/Ball Finish - Orderable Devices may have multiple material finish options. Finish options are separated by a vertical ruled line. Lead/Ball Finish values may wrap to two lines if the finish value exceeds the maximum column width.

Important Information and Disclaimer: The information provided on this page represents TI's knowledge and belief as of the date that it is provided. TI bases its knowledge and belief on information provided by third parties, and makes no representation or warranty as to the accuracy of such information. Efforts are underway to better integrate information from third parties. TI has taken and continues to take reasonable steps to provide representative and accurate information but may not have conducted destructive testing or chemical analysis on incoming materials and chemicals. TI and TI suppliers consider certain information to be proprietary, and thus CAS numbers and other limited information may not be available for release.

In no event shall TI's liability arising out of such information exceed the total purchase price of the TI part(s) at issue in this document sold by TI to Customer on an annual basis.

TAPE AND REEL INFORMATION

REEL DIMENSIONS

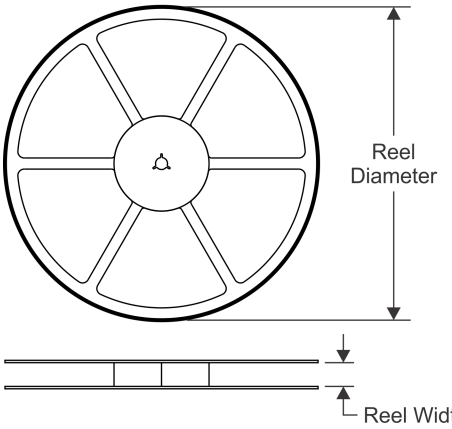

TAPE DIMENSIONS

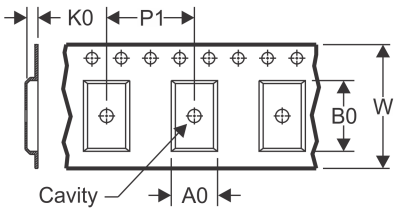

A0	Dimension designed to accommodate the component width
B0	Dimension designed to accommodate the component length
K0	Dimension designed to accommodate the component thickness
W	Overall width of the carrier tape
P1	Pitch between successive cavity centers

QUADRANT ASSIGNMENTS FOR PIN 1 ORIENTATION IN TAPE

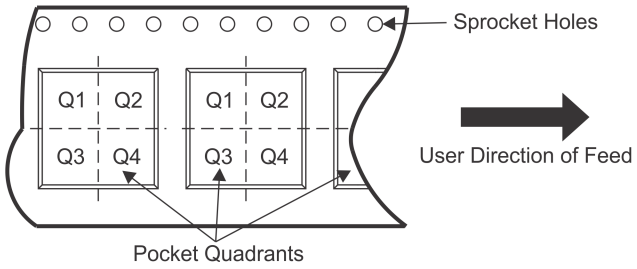

*All dimensions are nominal

Device	Package Type	Package Drawing	Pins	SPQ	Reel Diameter (mm)	Reel Width W1 (mm)	A0 (mm)	B0 (mm)	K0 (mm)	P1 (mm)	W (mm)	Pin1 Quadrant
INA827AIDGKR	VSSOP	DGK	8	2500	330.0	12.4	5.3	3.4	1.4	8.0	12.0	Q1

TAPE AND REEL BOX DIMENSIONS

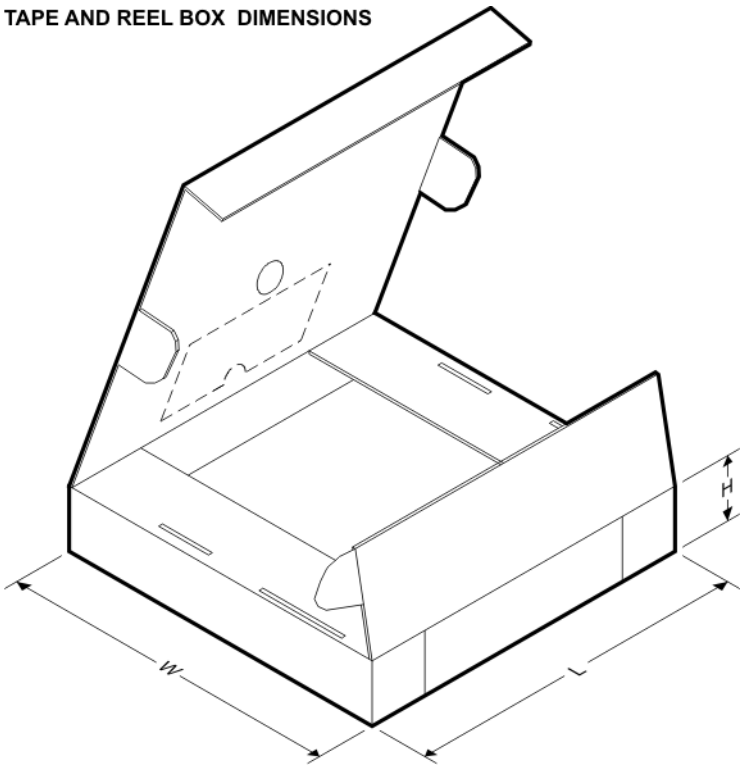

*All dimensions are nominal

Device	Package Type	Package Drawing	Pins	SPQ	Length (mm)	Width (mm)	Height (mm)
INA827AIDGKR	VSSOP	DGK	8	2500	366.0	364.0	50.0

DGK (S–PDSO–G8) PLASTIC SMALL–OUTLINE PACKAGE

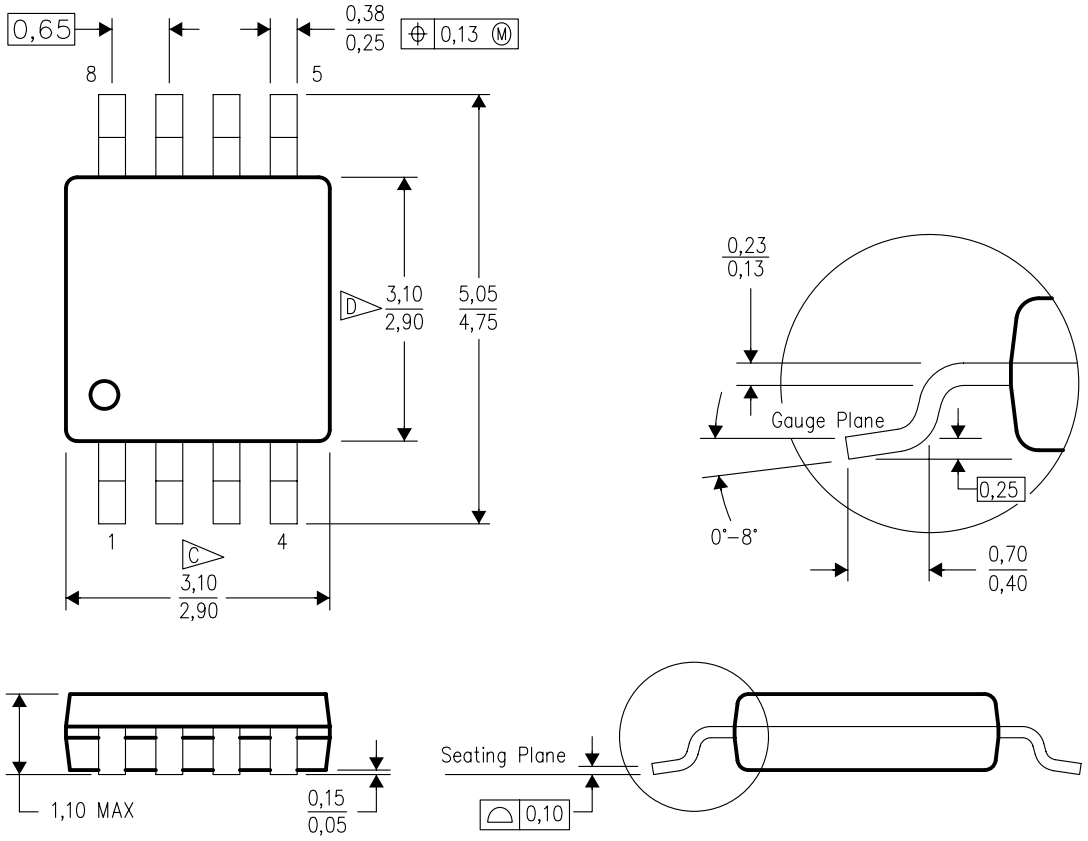

4073329/E 05/06

NOTES:
A. All linear dimensions are in millimeters.
B. This drawing is subject to change without notice.
C. Body length does not include mold flash, protrusions, or gate burrs. Mold flash, protrusions, or gate burrs shall not exceed 0.15 per end.
D. Body width does not include interlead flash. Interlead flash shall not exceed 0.50 per side.
E. Falls within JEDEC MO–187 variation AA, except interlead flash.

DGK (S–PDSO–G8) PLASTIC SMALL OUTLINE PACKAGE

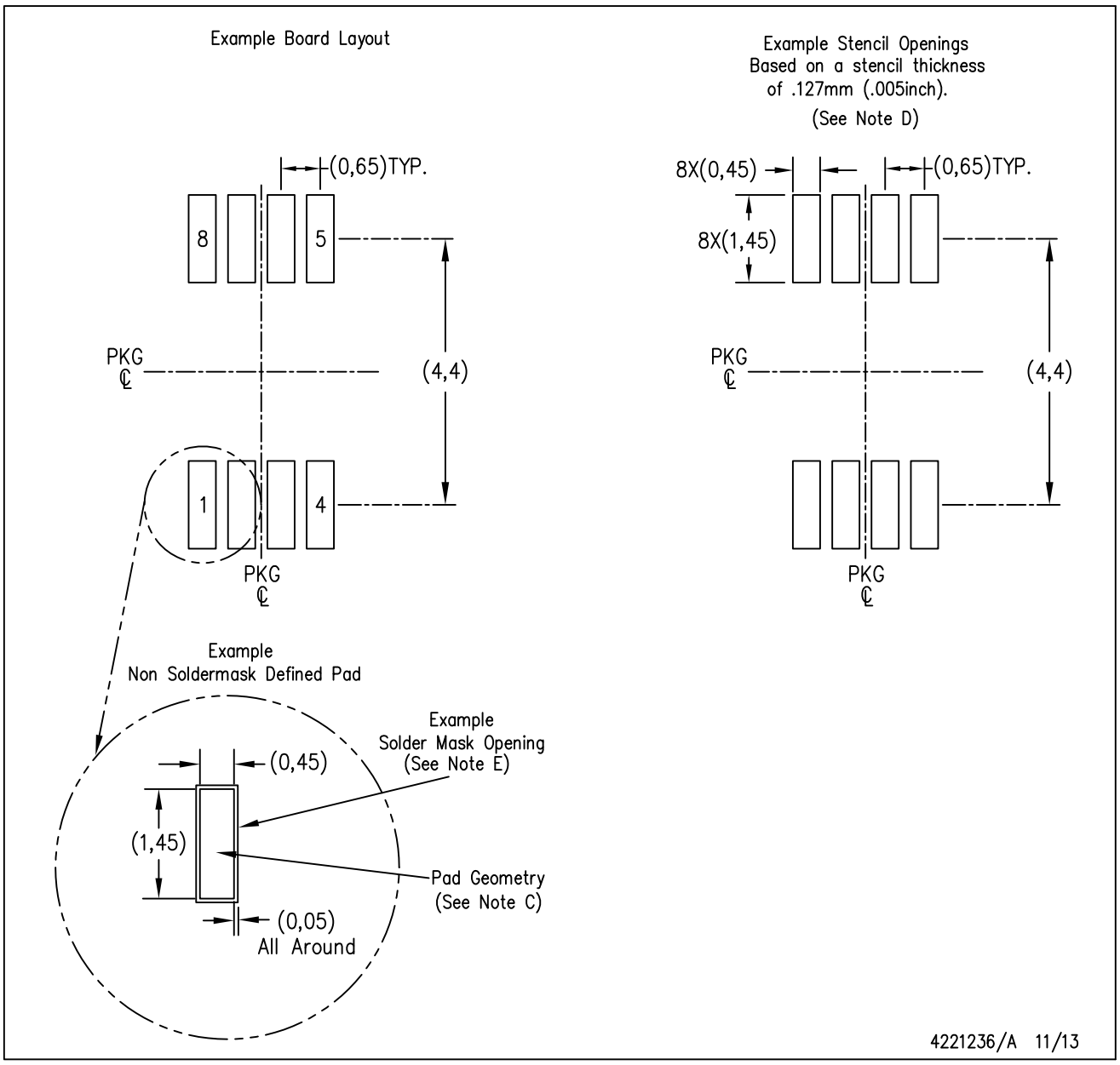

NOTES:
A. All linear dimensions are in millimeters.
B. This drawing is subject to change without notice.
C. Publication IPC–7351 is recommended for alternate designs.
D. Laser cutting apertures with trapezoidal walls and also rounding corners will offer better paste release. Customers should contact their board assembly site for stencil design recommendations. Refer to IPC–7525 for other stencil recommendations.
E. Customers should contact their board fabrication site for solder mask tolerances between and around signal pads.

IMPORTANT NOTICE AND DISCLAIMER

TI PROVIDES TECHNICAL AND RELIABILITY DATA (INCLUDING DATASHEETS), DESIGN RESOURCES (INCLUDING REFERENCE DESIGNS), APPLICATION OR OTHER DESIGN ADVICE, WEB TOOLS, SAFETY INFORMATION, AND OTHER RESOURCES “AS IS” AND WITH ALL FAULTS, AND DISCLAIMS ALL WARRANTIES, EXPRESS AND IMPLIED, INCLUDING WITHOUT LIMITATION ANY IMPLIED WARRANTIES OF MERCHANTABILITY, FITNESS FOR A PARTICULAR PURPOSE OR NON-INFRINGEMENT OF THIRD PARTY INTELLECTUAL PROPERTY RIGHTS.

These resources are intended for skilled developers designing with TI products. You are solely responsible for (1) selecting the appropriate TI products for your application, (2) designing, validating and testing your application, and (3) ensuring your application meets applicable standards, and any other safety, security, or other requirements. These resources are subject to change without notice. TI grants you permission to use these resources only for development of an application that uses the TI products described in the resource. Other reproduction and display of these resources is prohibited. No license is granted to any other TI intellectual property right or to any third party intellectual property right. TI disclaims responsibility for, and you will fully indemnify TI and its representatives against, any claims, damages, costs, losses, and liabilities arising out of your use of these resources.

TI’s products are provided subject to TI’s Terms of Sale (www.ti.com/legal/termsofsale.html) or other applicable terms available either on ti.com or provided in conjunction with such TI products. TI’s provision of these resources does not expand or otherwise alter TI’s applicable warranties or warranty disclaimers for TI products.

Mailing Address: Texas Instruments, Post Office Box 655303, Dallas, Texas 75265
Copyright © 2020, Texas Instruments Incorporated