INA3221 Triple-Channel, High-Side Measurement, Shunt and Bus Voltage Monitor with I²C- and SMBUS-Compatible Interface

1 Features

- Senses Bus Voltages From 0 V to 26 V
- Reports Shunt and Bus Voltage
- High Accuracy:
  - Offset Voltage: ±80 µV (max)
  - Gain Error: 0.25% (max)
- Configurable Averaging Options
- Four Programmable Addresses
- Programmable Alert and Warning Outputs
- Power-Supply Operation: 2.7 V to 5.5 V

2 Applications

- Computers
- Power Management
- Telecom Equipment
- Battery Chargers
- Power Supplies
- Test Equipment

3 Description

The INA3221 is a three-channel, high-side current and bus voltage monitor with an I²C- and SMBUS-compatible interface. The INA3221 monitors both shunt voltage drops and bus supply voltages, in addition to having programmable conversion times and averaging modes for these signals. The INA3221 offers both critical and warning alerts to detect multiple programmable out-of-range conditions for each channel.

The INA3221 senses current on buses that can vary from 0 V to 26 V. The device is powered from a single 2.7-V to 5.5-V supply, and draws 350 µA (typ) of supply current. The INA3221 is specified over the operating temperature range of –40°C to +125°C. The I²C- and SMBUS-compatible interface features four programmable addresses.

Device Information(1)

PART NUMBER	PACKAGE	BODY SIZE (NOM)
INA3221	VQFN (16)	4.00 mm x 4.00 mm

(1) For all available packages, see the package option addendum at the end of the datasheet.

Typical Application

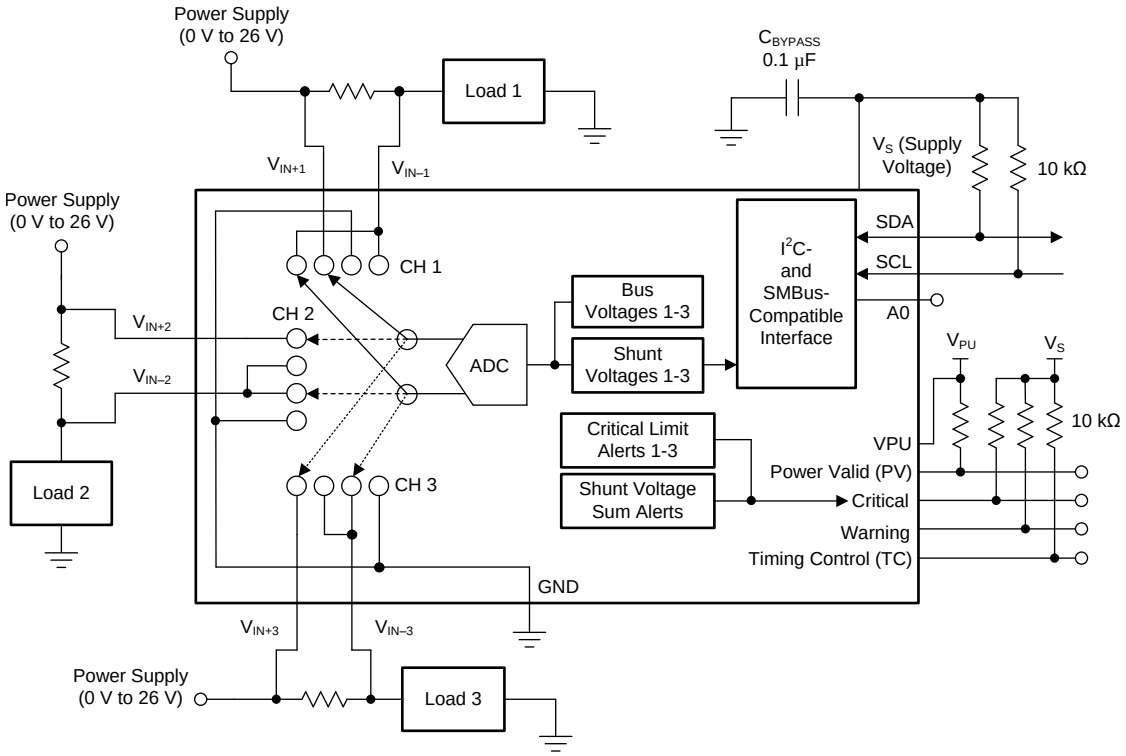

An IMPORTANT NOTICE at the end of this data sheet addresses availability, warranty, changes, use in safety-critical applications, intellectual property matters and other important disclaimers. PRODUCTION DATA.

Table of Contents

1 Features ... 1
2 Applications ... 1
3 Description ... 1
4 Revision History ... 2
5 Device Comparison Table ... 4
6 Pin Configuration and Functions ... 4
7 Specifications ... 5
7.1 Absolute Maximum Ratings ... 5
7.2 ESD Ratings ... 5
7.3 Recommended Operating Conditions ... 5
7.4 Thermal Information ... 5
7.5 Electrical Characteristics ... 6
7.6 Typical Characteristics ... 7
8 Detailed Description ... 10
8.1 Overview ... 10
8.2 Functional Block Diagram ... 10
8.3 Feature Description ... 11
8.4 Device Functional Modes ... 16
8.5 Programming ... 20
8.6 Register Maps ... 24
9 Application and Implementation ... 36
9.1 Application Information ... 36
9.2 Typical Application ... 36
10 Power Supply Recommendations ... 38
11 Layout ... 38
11.1 Layout Guidelines ... 38
11.2 Layout Example ... 38
12 Device and Documentation Support ... 39
12.1 Device Support ... 39
12.2 Documentation Support ... 39
12.3 Community Resources ... 39
12.4 Trademarks ... 39
12.5 Electrostatic Discharge Caution ... 39
12.6 Glossary ... 39
13 Mechanical, Packaging, and Orderable Information ... 39

4 Revision History

NOTE: Page numbers for previous revisions may differ from page numbers in the current version.

Changes from Revision A (June 2013) to Revision B **Page**

- Added *Device Information*and *ESD Ratings* tables, and *Feature Description*, *Device Functional Modes*, *Application and Implementation*, *Power Supply Recommendations*, *Layout*, *Device and Documentation Support*, and *Mechanical, Packaging, and Orderable Information* sections ... 1
- Deleted trace from SDA to SCL, and added missing connector dot to V_S in front-page diagram ... 1
- Added (V_{IN+}) + ($V_{IN–}$) / 2 to common-mode analog inputs in the *Absolute Maximum Ratings* table ... 5
- Deleted VBUS from analog inputs in *Absolute Maximum Ratings* table ... 5
- Added operating temperature to *Absolute Maximum Ratings* table ... 5
- Changed all V_{SENSE} to V_{SHUNT} throughout data sheet for consistency ... 6
- Changed "Status register" to "Mask/Enable register" to clarify register name in *Basic ADC Functions* section ... 11
- Changed *Critical Alert* section text for clarity. ... 12
- Added Summation Control Function section ... 12
- Changed external "R_{PU}" to "R_{PU_ext}" in Figure 20 ... 14
- Changed *Multiple Channel Monitoring* section text for clarity. ... 17
- Added X and Y axis labels to Figure 25 ... 18
- Changed "bidirectional" to "I/O" in second paragraph of *Bus Overview* section ... 20
- Changed V_{S+} to VS in Table 1 ... 20
- Changed references in Figure 30 to point to correct notes ... 22
- Changed Figure 31 ... 23
- Changed values in Table 2, *Bus Timing Definitions* ... 23
- Added data valid time to Table 2, *Bus Timing Definitions* ... 23
- Changed fall time to split data and clock times in Table 2, *Bus Timing Definitions* ... 23
- Deleted rise time for data in Table 2, *Bus Timing Definitions* ... 23
- Deleted trace from SDA to SCL, and added missing connector dot to V_S in Figure 52 ... 36

Copyright © 2012–2016, Texas Instruments Incorporated

Changes from Original (May 2012) to Revision A **Page**

- Changed *Shunt voltage input range* parameter values in *Electrical Characteristics* table 6
- Updated Figure 19 13
- Changed second paragraph of *Serial Bus Address* section 20
- Updated Figure 27 and note (1) 21
- Updated Figure 28 and note (1) 21
- Updated Figure 29 and note (1) 22
- Updated Figure 30 and note (1) 22
- Changed bit D15 in Power Valid Upper Limit Register 34
- Changed bit D15 in Power Valid Lower Limit Register 34

Copyright © 2012–2016, Texas Instruments Incorporated

5 Device Comparison Table

DEVICE	DESCRIPTION
INA226	36-V, Bidirectional, Ultrahigh Accuracy, Low- or High-Side, I^2C Out, Current and Power Monitor With Alert
INA219	26-V, Bidirectional, Zero-Drift, High-Side, I^2C Out, Current and Power Monitor
INA209	26-V, Bidirectional, Low- or High-Side, I^2C Out, Current and Power Monitor and High-Speed Comparator
INA210, INA211, INA212, INA213, INA214	26-V, Bidirectional, Zero-Drift, High-Accuracy, Low- or High-Side, Voltage Out, Current Shunt Monitor

6 Pin Configuration and Functions

RGV Package
16-Pin VQFN
Top View

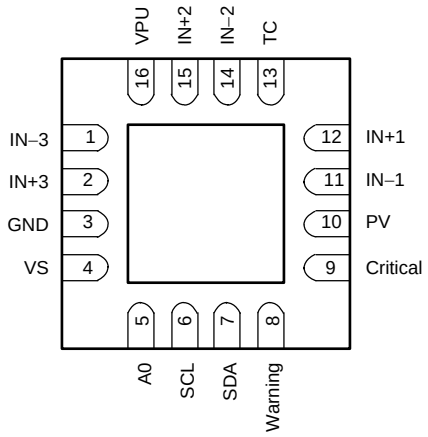

Pin Functions

PIN		I/O	DESCRIPTION
NAME	NO.		
A0	5	Digital input	Address pin. Connect to GND, SCL, SDA, or V_S. Table 1 shows pin settings and corresponding addresses.
Critical	9	Digital output	Conversion-triggered critical alert; open-drain output.
GND	3	Analog	Ground
IN–1	11	Analog input	Connect to load side of the channel 1 shunt resistor. Bus voltage is the measurement from this pin to ground.
IN+1	12	Analog input	Connect to supply side of the channel 1 shunt resistor.
IN–2	14	Analog input	Connect to load side of the channel 2 shunt resistor. Bus voltage is the measurement from this pin to ground.
IN+2	15	Analog input	Connect to supply side of the channel 2 shunt resistor.
IN–3	1	Analog input	Connect to load side of the channel 3 shunt resistor. Bus voltage is the measurement from this pin to ground.
IN+3	2	Analog input	Connect to supply side of the channel 3 shunt resistor.
PV	10	Digital output	Power valid alert; open-drain output.
SCL	6	Digital input	Serial bus clock line; open-drain input.
SDA	7	Digital I/O	Serial bus data line; open-drain input/output.
TC	13	Digital output	Timing control alert; open-drain output.
VPU	16	Analog input	Pull-up supply voltage used to bias power valid output circuitry.
VS	4	Analog	Power supply, 2.7 V to 5.5 V.
Warning	8	Digital output	Averaged measurement warning alert; open-drain output.

Copyright © 2012–2016, Texas Instruments Incorporated

7 Specifications

7.1 Absolute Maximum Ratings

over operating free-air temperature range (unless otherwise noted)(1)

			MIN	MAX	UNIT
Voltage	Supply, V_S			6	V
Analog inputs	IN+, IN–	Differential (V_{IN+}) – ($V_{IN–}$)(2)	–26	26	V
		Common-mode (V_{IN+}) + ($V_{IN–}$) / 2	–0.3	26	
	VPU			26	
Digital outputs	Critical, warning, power valid			6	V
	Timing control			26	
Serial bus	Data line, SDA		(GND – 0.3)	6	V
	Clock line, SCL		(GND – 0.3)	(V_S + 0.3)	
Current	Input, into any pin			5	mA
	Open-drain, digital output			10	
Temperature	Operating, T_A		–40	125	°C
	Junction, T_J			150	
	Storage, T_{stg}		–65	150	

(1) Stresses beyond those listed under *Absolute Maximum Ratings* may cause permanent damage to the device. These are stress ratings only, which do not imply functional operation of the device at these or any other conditions beyond those indicated under *Recommended Operating Conditions*. Exposure to absolute-maximum-rated conditions for extended periods may affect device reliability.
(2) V_{IN+} and $V_{IN–}$ can have a differential voltage of –26 V to +26 V; however, the voltage at these pins must not exceed the range of –0.3 V to +26 V.

7.2 ESD Ratings

			VALUE	UNIT
$V_{(ESD)}$	Electrostatic discharge	Human-body model (HBM), per ANSI/ESDA/JEDEC JS-001(1)	±2500	V
		Charged-device model (CDM), per JEDEC specification JESD22-C101(2)	±1000	
		Machine model	±200	

(1) JEDEC document JEP155 states that 500-V HBM allows safe manufacturing with a standard ESD control process.
(2) JEDEC document JEP157 states that 250-V CDM allows safe manufacturing with a standard ESD control process.

7.3 Recommended Operating Conditions

over operating free-air temperature range (unless otherwise noted)

	MIN	NOM	MAX	UNIT
Operating supply voltage	2.7		5.5	V
Operating temperature, T_A	–40		125	°C

7.4 Thermal Information

THERMAL METRIC(1)		INA3221 RGV (VQFN) 16 PINS	UNIT
$R_{\theta JA}$	Junction-to-ambient thermal resistance	36.5	°C/W
$R_{\theta JC(top)}$	Junction-to-case (top) thermal resistance	42.7	°C/W
$R_{\theta JB}$	Junction-to-board thermal resistance	14.7	°C/W
ψ_{JT}	Junction-to-top characterization parameter	0.5	°C/W
ψ_{JB}	Junction-to-board characterization parameter	14.8	°C/W
$R_{\theta JC(bot)}$	Junction-to-case (bottom) thermal resistance	3.3	°C/W

(1) For more information about traditional and new thermal metrics, see the *Semiconductor and IC Package Thermal Metrics* application report (SPRA953).

Copyright © 2012–2016, Texas Instruments Incorporated

7.5 Electrical Characteristics

at T_A = 25°C, V_S = 3.3 V, V_{IN+} = 12 V, V_{SHUNT} = (V_{IN+}) – ($V_{IN–}$) = 0 mV, and V_{BUS} = $V_{IN–}$ = 12 V (unless otherwise noted)

PARAMETER			TEST CONDITIONS	MIN	TYP	MAX	UNIT
INPUT							
V_{SHUNT}	Shunt voltage input			–163.84		163.8	mV
V_{BUS}	Bus voltage input			0		26	V
CMR	Common-mode rejection		V_{IN+} = 0 V to +26 V	110	120		dB
V_{OS}	Shunt offset voltage, RTI(1)				±40	±80	µV
			T_A = –40°C to +125°C		0.1	0.5	µV/°C
PSRR			vs power supply, V_S = 2.7 V to 5.5 V		15		µV/V
V_{OS}	Bus offset voltage, RTI(1)				±8	±16	mV
			T_A = –40°C to +125°C			80	µV/°C
PSRR			vs power supply		0.5		mV/V
I_{IN+}	Input bias current at IN+				10		µA
$I_{IN–}$	Input bias current at IN–				10 || 670		µA || kΩ
	Input leakage(2)		(IN+ pin) + (IN– pin), power-down mode		0.1	0.5	µA
DC ACCURACY							
	ADC native resolution				13		Bits
	1-LSB step size		Shunt voltage		40		µV
			Bus voltage		8		mV
	Shunt voltage gain error				0.1%	0.25%	
			T_A = –40°C to +125°C		10	50	ppm/°C
	Bus voltage gain error				0.1%	0.25%	
			T_A = –40°C to +125°C		10	50	ppm/°C
DNL	Differential nonlinearity				±0.1		LSB
$t_{CONVERT}$	ADC conversion time		CT bit = 000		140	154	µs
			CT bit = 001		204	224	
			CT bit = 010		332	365	
			CT bit = 011		588	646	
			CT bit = 100		1.1	1.21	ms
			CT bit = 101		2.116	2.328	
			CT bit = 110		4.156	4.572	
			CT bit = 111		8.244	9.068	
SMBus							
	SMBus timeout(3)				28	35	ms
DIGITAL INPUT/OUTPUT							
C_I	Input capacitance				3		pF
	Leakage input current		0 V ≤ V_{IN} ≤ V_S		0.1	1	µA
V_{IH}	High-level input voltage			0.7 (V_S)		6	V
V_{IL}	Low-level input voltage			–0.5		0.3 (V_S)	V
V_{OL}	Low-level output voltage	SDA, critical, warning, PV	V_S > +2.7 V, I_{OL} = 3 mA	0		0.4	V
		TC	V_S > +2.7 V, I_{OL} = 1.2 mA	0		0.4	
V_{hys}	Hysteresis voltage				500		mV
POWER SUPPLY							
	Quiescent current				350	450	µA
			Power-down mode		0.5	2	
	Power-on reset threshold				2		V

(1) RTI = Referred-to-input.
(2) Input leakage is positive (current flows into the pin) for the conditions shown at the top of this table. Negative leakage currents can occur under different input conditions.
(3) SMBus timeouts in the INA3221 reset the interface whenever SCL is low for more than 28 ms.

Copyright © 2012–2016, Texas Instruments Incorporated

7.6 Typical Characteristics

at T_A = 25°C, V_S = 3.3 V, V_{IN+} = 12 V, V_{SHUNT} = (V_{IN+}) – ($V_{IN–}$) = 0 mV, and V_{BUS} = $V_{IN–}$ = 12 V (unless otherwise noted)

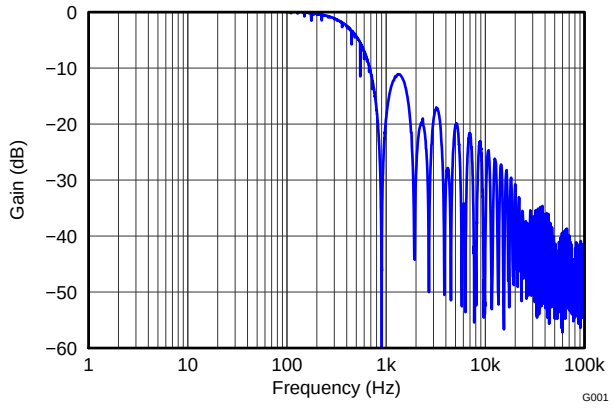

Figure 1. Frequency Response

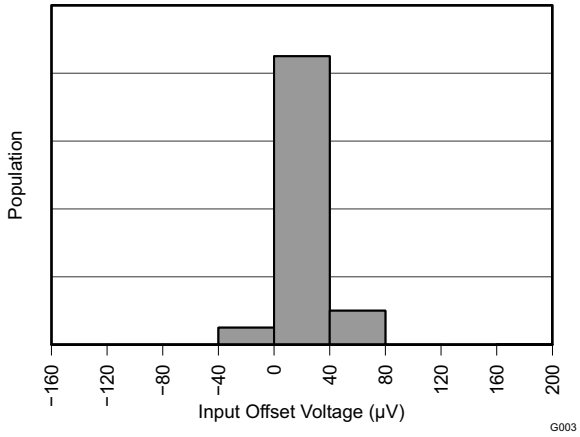

Figure 2. Shunt Input Offset Voltage Production Distribution

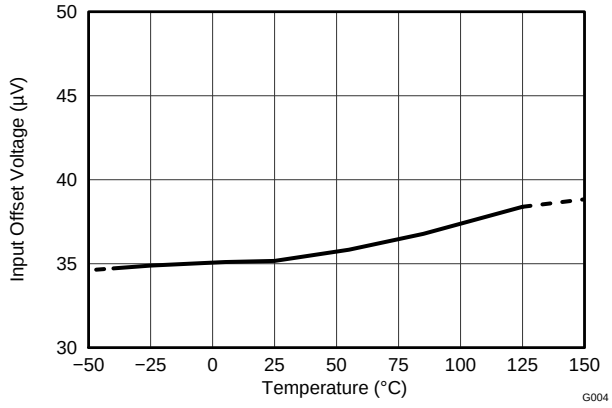

Figure 3. Shunt Input Offset Voltage vs Temperature

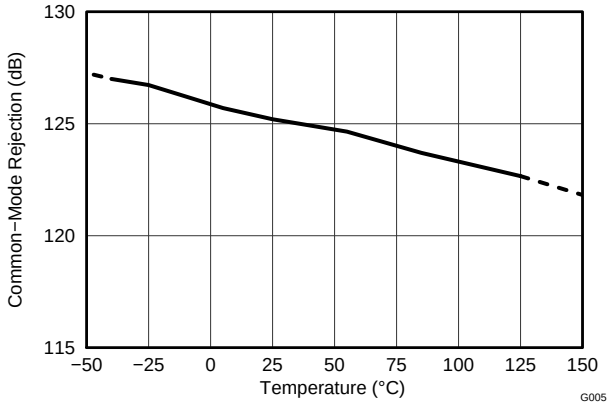

Figure 4. Shunt Input Common-Mode Rejection Ratio vs Temperature

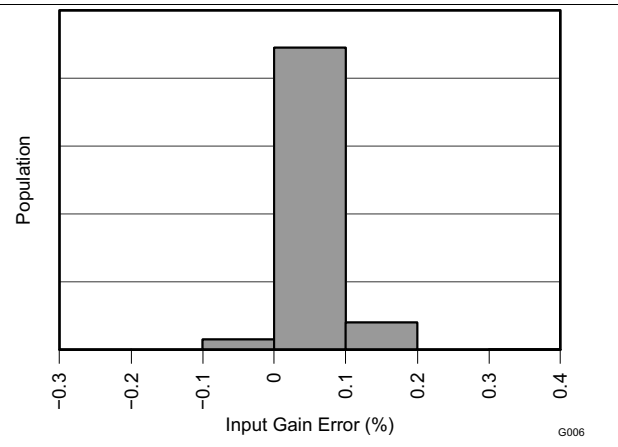

Figure 5. Shunt Input Gain Error Production Distribution

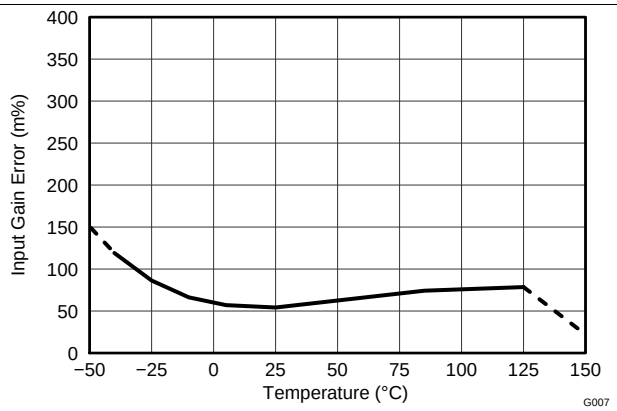

Figure 6. Shunt Input Gain Error vs Temperature

Copyright © 2012–2016, Texas Instruments Incorporated

Typical Characteristics (continued)

at T_A = 25°C, V_S = 3.3 V, V_{IN+} = 12 V, V_{SHUNT} = (V_{IN+}) – ($V_{IN–}$) = 0 mV, and V_{BUS} = $V_{IN–}$ = 12 V (unless otherwise noted)

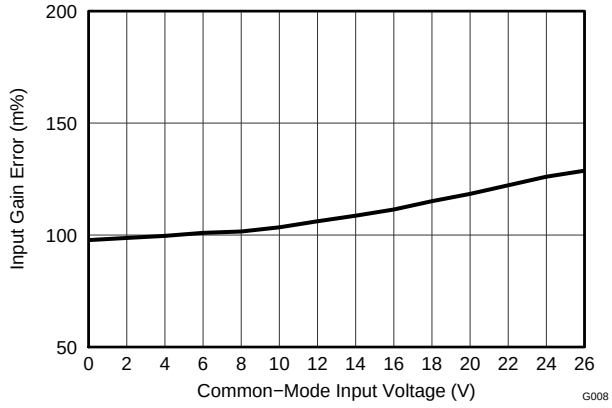

Figure 7. Shunt Input Gain Error vs Common-Mode Voltage

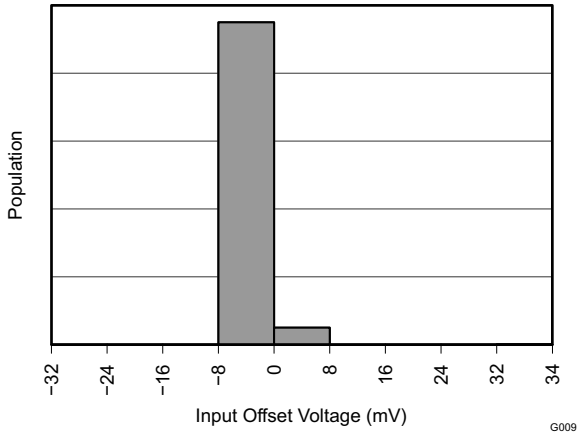

Figure 8. Bus Input Offset Voltage Production Distribution

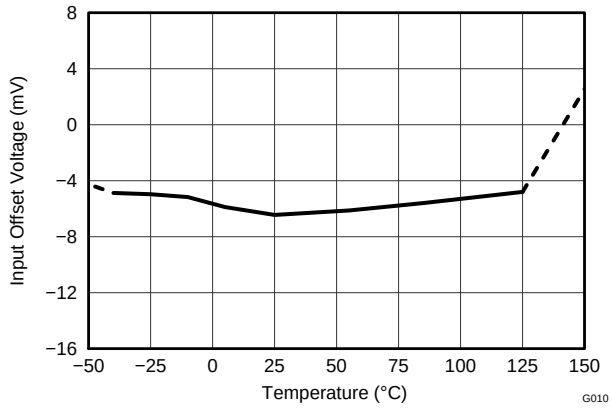

Figure 9. Bus Input Offset Voltage vs Temperature

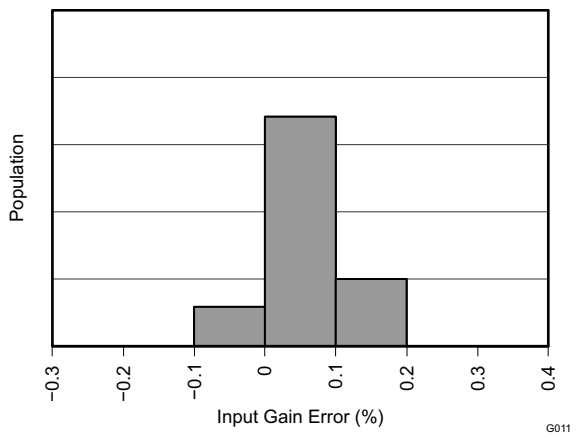

Figure 10. Bus Input Gain Error Production Distribution

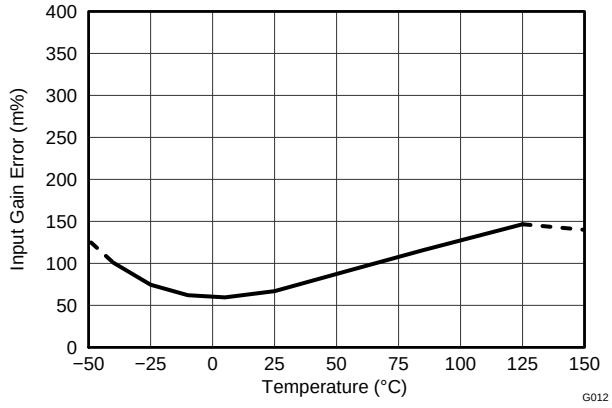

Figure 11. Bus Input Gain Error vs Temperature

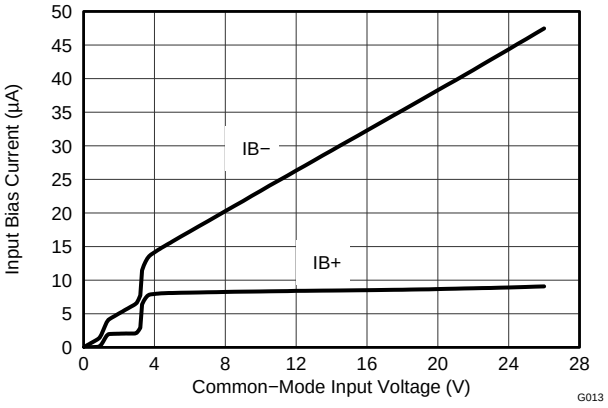

Figure 12. Input Bias Current vs Common-Mode Voltage

Copyright © 2012–2016, Texas Instruments Incorporated

Typical Characteristics (continued)

at T_A = 25°C, V_S = 3.3 V, V_{IN+} = 12 V, V_{SHUNT} = (V_{IN+}) – ($V_{IN–}$) = 0 mV, and V_{BUS} = $V_{IN–}$ = 12 V (unless otherwise noted)

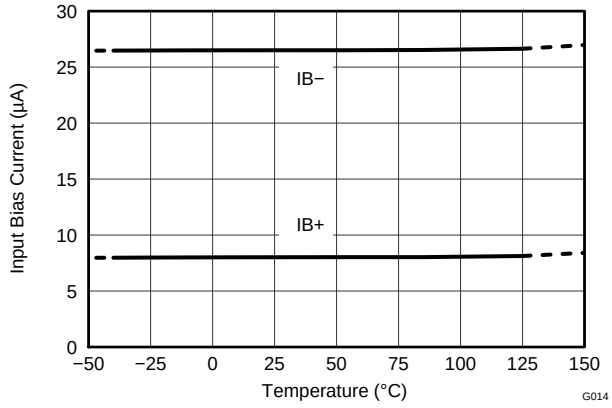

Figure 13. Input Bias Current vs Temperature

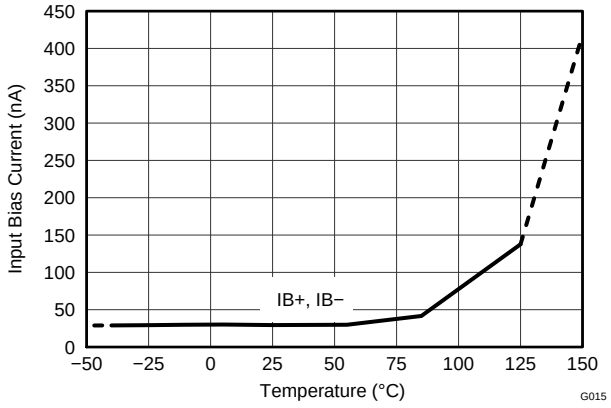

Figure 14. Input Bias Current vs Temperature (Shutdown)

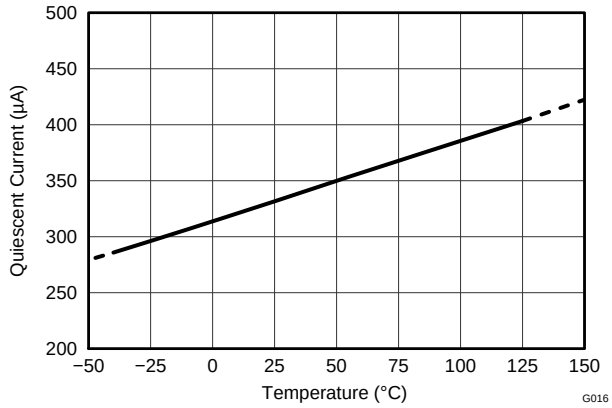

Figure 15. Active I_Q vs Temperature

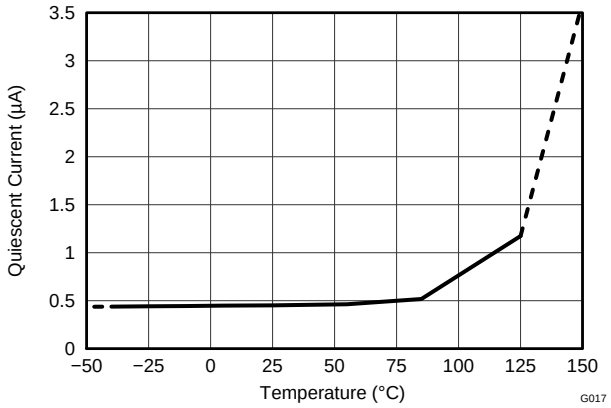

Figure 16. Shutdown I_Q vs Temperature

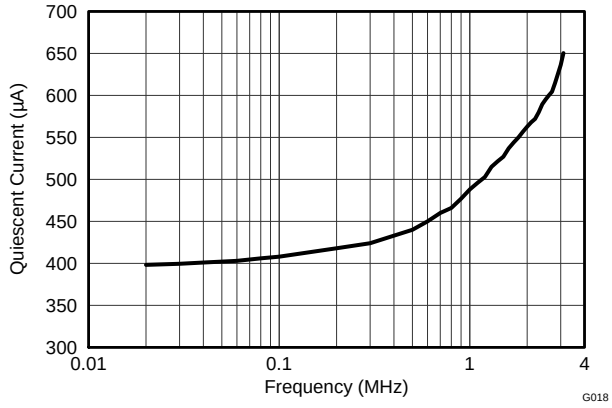

Figure 17. Active I_Q vs I^2C Clock Frequency

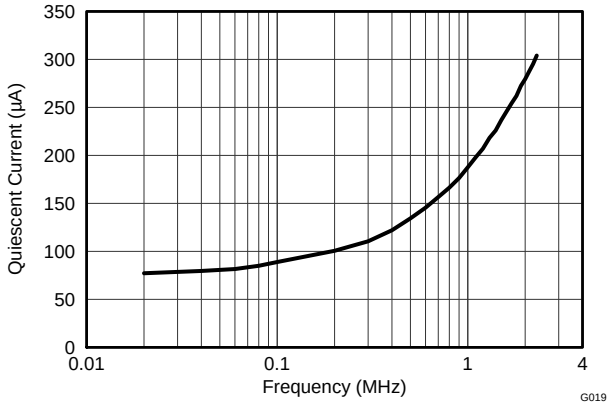

Figure 18. Shutdown I_Q vs I^2C Clock Frequency

Copyright © 2012–2016, Texas Instruments Incorporated

8 Detailed Description

8.1 Overview

The INA3221 is a current-shunt and bus voltage monitor that communicates over an I²C- and SMBus-compatible interface. The INA3221 provides digital shunt and bus voltage readings necessary for accurate decision making in precisely-controlled systems, and also monitors multiple rails to maintain compliance voltages. Programmable registers offer flexible configuration for measurement precision, and continuous versus single-shot operation. The *Register Maps* section provides details of the INA3221 registers, beginning with Table 3.

8.2 Functional Block Diagram

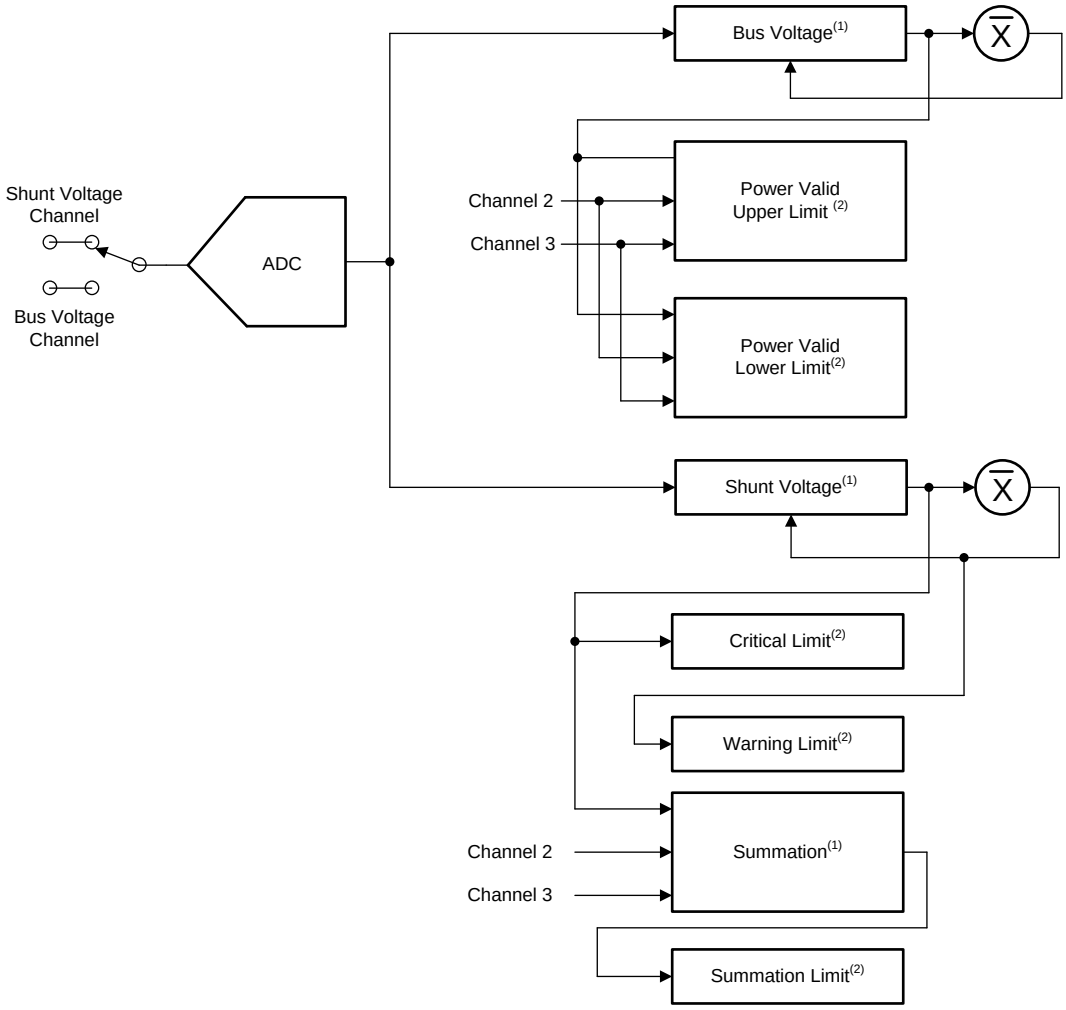

(1) Read-only.

(2) Read/write.

Copyright © 2012–2016, Texas Instruments Incorporated

8.3 Feature Description

8.3.1 Basic ADC Functions

The INA3221 performs two measurements on up to three power supplies of interest. The voltage developed from the load current passing through a shunt resistor creates a shunt voltage that is measured between the IN+ and IN– pins. The device also internally measures the power-supply bus voltage at the IN– pin for each channel. The differential shunt voltage is measured with respect to the IN– pin, and the bus voltage is measured with respect to ground.

The INA3221 is typically powered by a separate power supply that ranges from 2.7 V to 5.5 V. The monitored supply buses range from 0 V to 26 V.

CAUTION

Based on the fixed 8-mV bus-voltage register LSB (for any channel), a full-scale register value results in 32.76 V. However, the actual voltage applied to the INA3221 input pins must not exceed 26 V.

There are no special power-supply sequencing considerations between the common-mode input ranges and the device power-supply voltage because they are independent of each other; therefore, the bus voltages can be present with the supply voltage off and vice versa.

The INA3221 takes two measurements for each channel: one for shunt voltage and one for bus voltage. Each measurement can be independently or sequentially measured, based on the mode setting (bits 2-0 in the Configuration register). When the INA3221 is in normal operating mode (that is, the MODE bits of the Configuration register are set to 111), the device continuously converts a shunt-voltage reading followed by a bus-voltage reading. This procedure converts one channel, and then continues to the shunt voltage reading of the next enabled channel, followed by the bus-voltage reading for that channel, and so on, until all enabled channels have been measured. The programmed Configuration register mode setting applies to all channels. Any channels that are not enabled are bypassed in the measurement sequence, regardless of mode setting.

The INA3221 has two operating modes, continuous and single-shot, that determine the internal ADC operation after these conversions complete. When the INA3221 is set to continuous mode (using the MODE bit settings), the device continues to cycle through all enabled channels until a new configuration setting is programmed.

The Configuration register MODE control bits also enable modes to be selected that convert only the shunt or bus voltage. This feature further allows the device to fit specific application requirements.

In single-shot (triggered) mode, setting any single-shot convert mode to the Configuration register (that is, the Configuration register MODE bits set to 001, 010, or 011) triggers a single-shot conversion. This action produces a single set of measurements for all enabled channels. To trigger another single-shot conversion, write to the Configuration register a second time, even if the mode does not change. When a single-shot conversion is initiated, all enabled channels are measured one time and then the device enters a power-down state. The INA3221 registers can be read at any time, even while in power-down. The data present in these registers are from the last completed conversion results for the corresponding register. The conversion ready flag bit (Mask/Enable register, CVRF bit) helps coordinate single-shot conversions, and is especially helpful during longer conversion time settings. The CVRF bit is set after all conversions are complete. The CVRF bit clears under the following conditions:

1. Writing to the Configuration register, except when configuring the MODE bits for power-down mode; or
2. Reading the Mask/Enable register.

In addition to the two operating modes (continuous and single-shot), the INA3221 also has a separate selectable power-down mode that reduces the quiescent current and turns off current into the INA3221 inputs. Power-down mode reduces the impact of supply drain when the device is not used. Full recovery from power-down mode requires 40 µs. The INA3221 registers can be written to and read from while the device is in power-down mode. The device remains in power-down mode until one of the active MODE settings are written to the Configuration register.

Copyright © 2012–2016, Texas Instruments Incorporated

Feature Description (continued)

8.3.2 Alert Monitoring

The INA3221 allows programmable thresholds that make sure the intended application operates within the desired operating conditions. Multiple monitoring functions are available using four alert pins: Critical, Warning, PV (power valid), and TC (timing control). These alert pins are open-drain connections.

8.3.2.1 Critical Alert

The critical-alert feature monitors functions based on individual conversions of each shunt-voltage channel. The critical-alert limit feature compares the shunt-voltage conversion for each shunt-voltage channel to the value programmed into the corresponding limit register, in order to determine if the measured value exceeds the intended limit. Exceeding the programmed limit indicates that the current through the shunt resistor is too high.

At power-up, the default critical-alert limit value for each channel is set to the positive full-scale value, effectively disabling the alert. Program the corresponding limit registers at any time to begin monitoring for out-of-range conditions. The Critical alert pin pulls low if any channel measurement exceeds the limit present in the corresponding-channel critical-alert limit register. When the Critical alert pulls low, read the Mask/Enable register to determine which channel caused the critical alert flag indicator bit (CF1-3) to assert (= 1).

8.3.2.1.1 Summation Control Function

The INA3221 also allows the Critical alert pin to be controlled by the summation control function. This function adds the single shunt-voltage conversions for the desired channels (set by SCC1-3 in the Mask/Enable register) in order to compare the combined sum to the programmed limit.

The SCC bits either disable the summation control function or allow the summation control function to switch between including two or three channels in the Shunt-Voltage Sum register. The Shunt-Voltage Sum Limit register contains the programmed value that is compared to the value in the Shunt-Voltage Sum register in order to determine if the total summed limit is exceeded. If the shunt-voltage sum limit value is exceeded, the Critical alert pin pulls low. Either the summation alert flag indicator bit (SF) or the individual critical alert limit bits (CF1-3) in the Mask/Enable register determine the source of the alert when the Critical alert pin pulls low.

For the summation limit to have a meaningful value, use the same shunt-resistor value on all included channels. Unless equal shunt-resistor values are used for each channel, do not use this function to add the individual conversion values directly together in the Shunt-Voltage Sum register to report the total current.

8.3.2.2 Warning Alert

The warning alert monitors the averaged value of each shunt-voltage channel. The averaged value of each shunt-voltage channel is based on the number of averages set with the averaging mode bits (AVG1-3) in the Configuration register. The average value updates in the shunt-voltage output register each time there is a conversion on the corresponding channel. The device compares the averaged value to the value programmed in the corresponding-channel Warning Alert Limit register to determine if the averaged value has been exceeded, indicating whether the average current is too high. At power-up, the default warning-alert limit value for each channel is set to the positive full-scale value, effectively disabling the alert. The corresponding limit registers can be programmed at any time to begin monitoring for out-of-range conditions. The Warning alert pin pulls low if any channel measurements exceed the limit present in the corresponding-channel Warning Alert Limit register. When the Warning alert pin pulls low, read the Mask/Enable register in order to determine which channel warning alert flag indicator bit (WF1-3) is asserted (= 1).

Copyright © 2012–2016, Texas Instruments Incorporated

Feature Description (continued)

8.3.2.3 Power-Valid Alert

The power-valid alert verifies if all power rails are above the required levels. This feature manages power sequencing, and validates the reported measurements based on system configuration. Power-valid mode starts at power-up, and detects when each channel exceeds a 10-V threshold. This 10-V level is the default value programmed into the Power-Valid Upper-Limit register. This value can be reprogrammed when the INA3221 is powered up to a valid supply-voltage level of at least 2.7 V. When all three bus-voltage measurements reach the programmed value loaded to the Power-Valid Upper-Limit register, the power-valid (PV) alert pin pulls high. PV powers up in a low state, and does not pull high until the power-valid conditions are met, indicating all bus-voltage rails are above the power-valid upper-limit value. This sequence is shown in Figure 19.

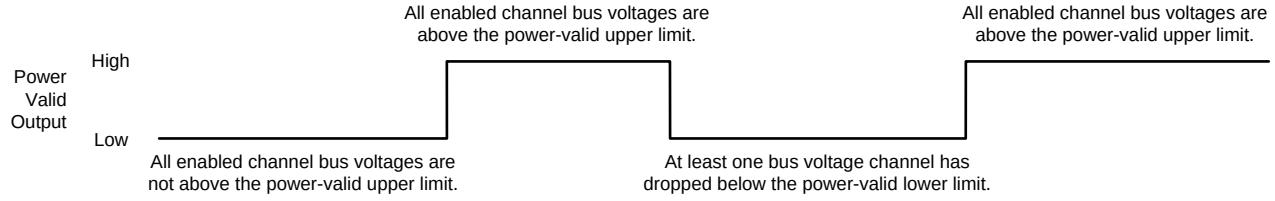

Figure 19. Power-Valid State Diagram

When the power-valid conditions are met, and the PV pin pulls high, the INA3221 monitors if any bus-voltage measurements drop below 9 V. This 9-V level is the default value programmed into the Power-Valid Lower-Limit register. This value can also be reprogrammed when the INA3221 powers up to a supply voltage of at least 2.7 V. If any bus-voltage measurement on the three channels drops below the Power-Valid Lower-Limit register value, the PV pin goes low, indicating that the power-valid condition is no longer met. At this point, the INA3221 resumes monitoring the power rails for a power-valid condition set in the Power-Valid Upper-Limit register.

The power-valid alert function is based on the power-valid conditions requirement that all three channels reach the intended Power-Valid Upper-Limit register value. If all three channels are not used, connect the unused-channel IN– pin externally to one of the used channels in order to use the power-valid alert function. If the unused channel is not connected to a valid rail, the power-valid alert function cannot detect if all three channels reach the power-valid level. Float the unused channel IN+ pin.

The power-valid function also requires that bus-voltage measurements are monitored. To detect changes in the power-valid state, enable bus-voltage measurements through one of the corresponding MODE-bit settings in the Configuration register. The single-shot bus-voltage mode periodically cycles between the bus-voltage measurements to make sure that the power-valid conditions are met.

When all three bus-voltage measurements are completed, the device compares the results to the power-valid threshold values to determine the power-valid state. The bus-voltage measurement values remain in the corresponding channel output registers until the bus-voltage measurements are taken again, thus updating the output registers. When the output registers are updated, the values are again compared to the power-valid thresholds. Without taking periodic bus-voltage measurements, the INA3221 is unable to determine if the power-valid conditions are maintained.

Copyright © 2012–2016, Texas Instruments Incorporated

Feature Description (continued)

The PV pin allows for a 0-V output that indicates a power-invalid condition. An output equal to the pull-up supply voltage connected to the VPU pin indicates a power-valid condition, as shown in Figure 20. It is also possible to divide down the high power-valid pull-up voltage by adding a resistor to ground at the PV output, thus allowing this function to interface with lower-voltage circuitry, if needed.

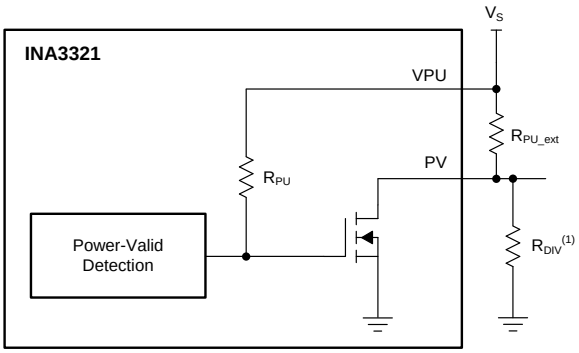

(1) R_{DIV} can be used to level-shift the PV output high.

Figure 20. Power-Valid Output Structure

8.3.2.4 Timing-Control Alert

The INA3221 timing-control alert function helps verify proper power-supply sequencing. At power-up, the default INA3221 setting is continuous shunt- and bus-voltage conversion mode, and the INA3221 internally begins comparing the channel-1 bus voltage to determine when a 1.2-V level is reached. This comparison is made each time the sequence returns to the channel-1 bus-voltage measurement. When a 1.2-V level is detected on the channel-1 bus-voltage measurement, the INA3221 begins checking for a 1.2-V level present on the channel-2 bus-voltage measurement. After a 1.2-V level is detected on channel 1, if the INA3221 does not detect a 1.2-V value or greater on the bus voltage measurement following four complete cycles of all three channels, the timing control (TC) alert pin pulls low to indicate that the INA3221 has not detected a valid power rail on channel 2. As shown in Figure 21, this sequence allows for approximately 28.6 ms from the time 1.2 V is detected on channel 1 for a valid voltage to be detected on channel 2. Figure 22 illustrates the state diagram for the TC alert pin.

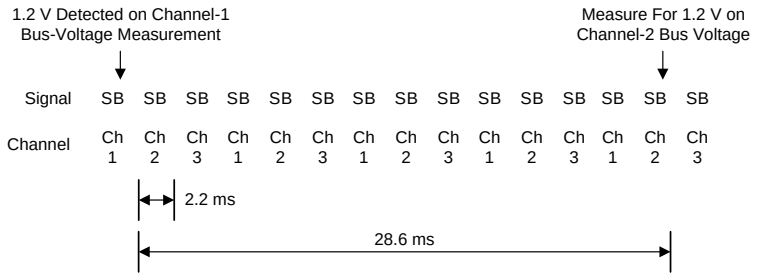

NOTE: The signal refers to the corresponding shunt (S) and bus (B) voltage measurement for each channel.

Figure 21. Timing Control Timing Diagram

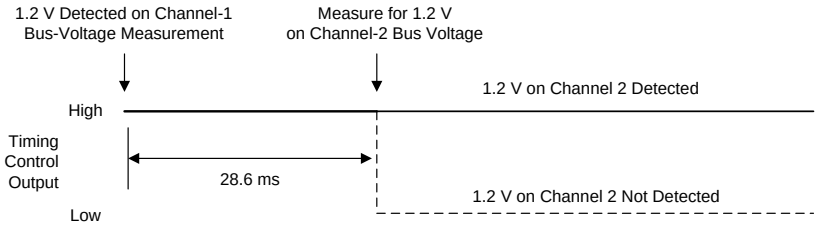

Figure 22. Timing Control State Diagram

Copyright © 2012–2016, Texas Instruments Incorporated

Feature Description (continued)

The timing control alert function is only monitored at power-up or when a software reset is issued by setting the reset bit (RST, bit 15) in the Configuration register. The timing control alert function timing is based on the default device settings at power-up. Writing to the Configuration register before the timing control alert function completes the full sequence results in disabling the timing control alert until power is cycled or a software reset is issued.

8.3.2.5 Default Settings

The default register power-up states are listed in the *Register Maps* section. These registers are volatile; if programmed to a value other than the default values shown in Table 3, the registers must be reprogrammed every time the device powers up.

8.3.3 Software Reset

The INA3321 features a software reset that reinitializes the device and register settings to default power-up values without having to cycle power to the device. Use bit 15 (RST) of the Configuration register to perform a software reset. Setting RST reinitializes all registers and settings to the default power state with the exception of the power-valid output state.

If a software reset is issued, the INA3221 holds the output of the PV pin until the power-valid detection sequence completes. The Power-Valid Upper Limit and Power-Valid Lower limit registers return to the default state when the software reset has been issued. Therefore, any reprogrammed limit registers are reset, resulting in the original power-valid thresholds validating the power-valid conditions. This architecture prevents interruption to circuitry connected to the power valid output during a software reset event.

Copyright © 2012–2016, Texas Instruments Incorporated

8.4 Device Functional Modes

8.4.1 Averaging Function

The INA3221 includes three channels to monitor up to three independent supply buses; however, multichannel monitoring sometimes results in poor shunt-resistor placement. Ideally, shunt resistors are placed as close as possible to the corresponding channel input pins. However, because of system layout and multiple power-supply rails, one or more shunt resistors may have to be located further away, thus presenting potentially larger measurement errors. These errors result from additional trace inductance and other parasitic impedances between the shunt resistor and input pins. Longer traces also create an additional potential for coupling noise into the signal if they are routed near noise-generating sections of the board.

The INA3221 averaging function mitigates this potential problem by limiting the impact that any single measurement has on the averaged value of each measured signal. This limitation reduces the influence that noise has on the averaged value, thereby effectively creating an input-signal filter.

The averaging function is illustrated in Figure 23. Operation begins by first measuring the shunt input signal on channel 1. This value is then subtracted from the previous value that was present in the corresponding data output register. This difference is then divided by the value programmed by the averaging mode setting (AVG2-0, Configuration register bits 11-9) and stored in an internal accumulation register. The computed result is then added to the previously-loaded data output register value, and the resulting value is loaded to the corresponding data output register. After the update, the next signal to be measured follows the same process. The larger the value selected for the averaging mode setting, the less impact or influence any new conversion has on the average value, as shown in Figure 24. This averaging feature functions as a filter to reduce input noise from the averaged measurement value.

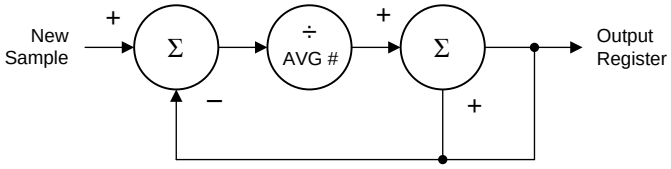

Figure 23. Averaging Function Block Diagram

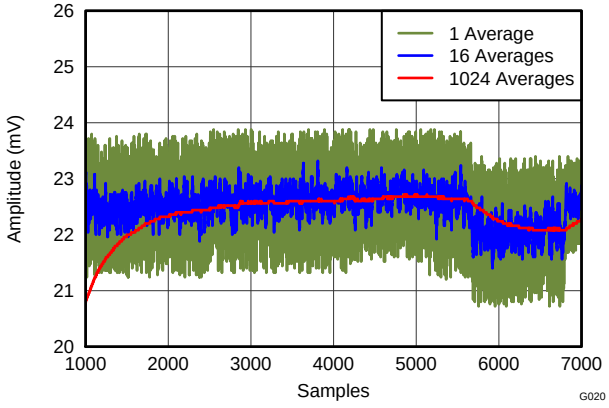

Figure 24. Average Setting Example

Copyright © 2012–2016, Texas Instruments Incorporated

Device Functional Modes (continued)

8.4.2 Multiple Channel Monitoring

The INA3221 monitors shunt and voltage measurements for up to three unique power-supply rails, and measures up to six different signals. Adjust the number of channels and signals being measured by setting the channel enable ($CH1_{en}$ to $CH3_{en}$) and mode (MODE3-1) bits in the Configuration register. This adjustment allows the device to be optimized based on application requirements for the system in use.

8.4.2.1 Channel Configuration

If all three channels must be monitored at power-up, but only one channel must be monitored after the system has stabilized, disable the other two channels after power-up. This configuration allows the INA3221 to only monitor the power-supply rail of interest. Disable unused channels to help improve system response time by more quickly returning to sampling the channel of interest. The INA3221 linearly monitors the enabled channels. That is, if all three channels are enabled for both shunt- and bus-voltage measurements, an additional five conversions complete after a signal is measured before the device returns to that particular signal to begin another conversion. To reduce this requirement down to two conversions before the device begins a new conversion on a particular channel again, change the operating mode to monitor only the shunt voltage.

A timing aspect is also involved in reducing the measured signals. The amount of time to complete an all-channel, shunt- and bus-voltage sequence is equal to the sum of the shunt-voltage conversion time and the bus-voltage conversion time (programmed by the CT bits in the Configuration register) multiplied by the three channels. The conversion times for the shunt- and bus-voltage measurements are programmed independently; however, the selected shunt- and bus-voltage conversion times apply to all channels.

Enable a single channel with only one signal measured to allow for that particular signal to be monitored solely. This setting enables the fastest response over time to changes in that specific input signal because there is no delay from the end of one conversion before the next conversion begins on that channel. Conversion time is not affected by enabling or disabling other channels. Selecting both the shunt- and bus-voltage settings, as well as enabling additional channels, extends the time from the end of one conversion on a signal before the beginning of the next conversion of that signal.

Copyright © 2012–2016, Texas Instruments Incorporated

Device Functional Modes (continued)

8.4.2.2 Averaging and Conversion-Time Considerations

The INA3221 has programmable conversion times for both the shunt- and bus-voltage measurements. The selectable conversion times for these measurements range from 140 µs to 8.244 ms. The conversion-time settings, along with the programmable-averaging mode, enable the INA3221 to optimize available timing requirements in a given application. For example, if a system requires data to be read every 2 ms with all three channels monitored, configure the INA3221 with the conversion times for the shunt- and bus-voltage measurements set to 332 µs.

The INA3221 can also be configured with a different conversion-time setting for the shunt- and bus-voltage measurements. This approach is common in applications where the bus voltage tends to be relatively stable, and allows for the time focused on the bus voltage measurement to be reduced relative to the shunt-voltage measurement. For example, the shunt-voltage conversion time can be set to 4.156 ms with the bus-voltage conversion time set to 588 µs for a 5-ms update time.

There are trade-offs associated with the conversion-time and averaging-mode settings. The averaging feature significantly improves the measurement accuracy by effectively filtering the signal. This approach allows the INA3221 to reduce the amount of noise in the measurement caused by noise coupling into the signal. A greater number of averages allows the INA3221 to be more effective in reducing the measurement noise component. The trade-off to this noise reduction is that the averaged value has a longer response time to input-signal changes. This aspect of the averaging feature is mitigated to some extent with the critical-alert feature that compares each single conversion to determine if a measured signal (with noise component) has exceeded the maximum acceptable level.

The selected conversion times also have an impact on measurement accuracy. This effect can seen in Figure 25. The multiple conversion times shown in Figure 25 illustrate the impact of noise on measurement. These curves shown do not use averaging. In order to achieve the highest-accuracy measurement possible, use a combination of the longest allowable conversion times and highest number of averages, based on system timing requirements.

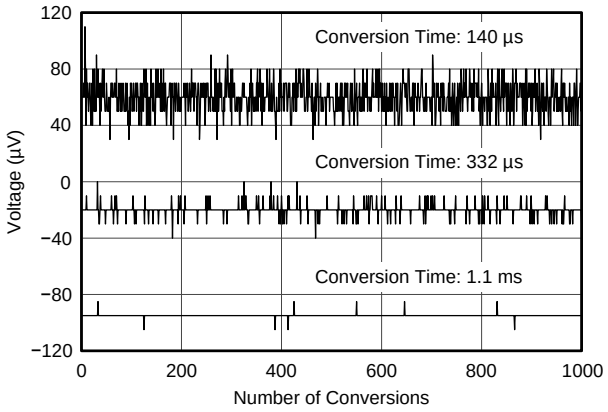

Figure 25. Noise Versus Conversion Time

Copyright © 2012–2016, Texas Instruments Incorporated

Device Functional Modes (continued)

8.4.3 Filtering and Input Considerations

Measuring current is often noisy, and such noise can be difficult to define. The INA3221 offers several filtering options by allowing conversion times and the number of averages to be selected independently in the Configuration register. The conversion times can be set independently for the shunt- and bus-voltage measurements as well, for added flexibility in configuring power-supply bus monitoring.

The internal ADC is based on a delta-sigma (ΔΣ) front-end with a 500-kHz (±30%) typical sampling rate. This architecture has good inherent noise rejection; however, transients that occur at or very close to the sampling-rate harmonics can cause problems. These transient signals are at 1 MHz and higher; therefore, the signals are managed by incorporating filtering at the INA3221 input. High-frequency signals allow for the use of low-value series resistors on the filter, with negligible effects on measurement accuracy. In general, filtering the INA3221 input is only necessary if there are transients at exact harmonics of the 500-kHz (±30%) sampling rate that are greater than 1 MHz. Filter using the lowest-possible series resistance (typically 10 Ω or less) and a ceramic capacitor. Recommended capacitor values are 0.1 µF to 1.0 µF. Figure 26 shows the INA3221 with an additional filter added at the input.

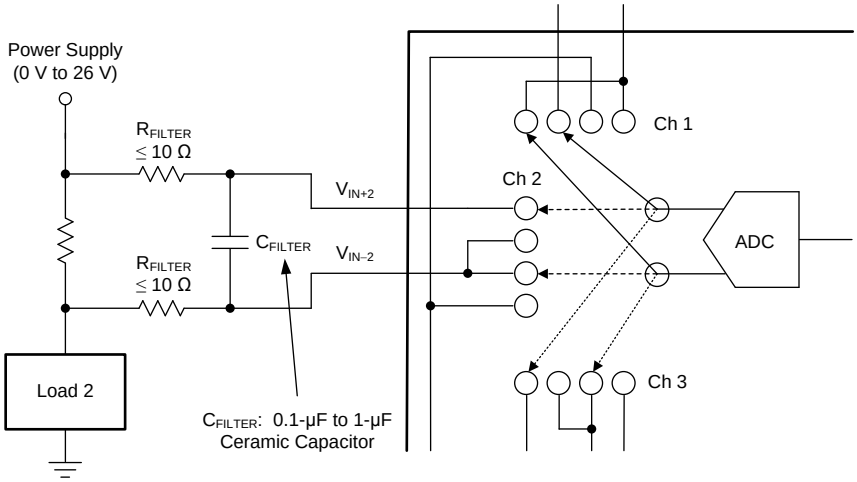

Figure 26. INA3221 With Input Filtering

The INA3221 inputs are specified to tolerate 26 V across the inputs. However, overload conditions are another consideration for the INA3221 inputs. For example, a large differential-input scenario might be a short to ground on the load side of the shunt. This type of event results in the full power-supply voltage applied across the shunt, if supported by the power supply or energy-storage capacitors. Keep in mind that removing a short to ground may result in inductive kickbacks that can exceed the 26-V differential and common-mode rating of the INA3221. Inductive kickback voltages are best controlled by zener-type transient-absorbing devices (commonly called *transzorbs*) combined with sufficient energy-storage capacitance.

In applications that do not have large energy-storage electrolytic capacitors on one or both sides of the shunt, an input overstress condition can result from an excessive dV/dt of the voltage applied to the input. A hard physical short is the most likely cause of this event, particularly in applications without large electrolytic capacitors present. This problem occurs because an excessive dV/dt can activate the INA3221 ESD protection in systems where large currents are available. Testing has demonstrated that the addition of 10-Ω resistors in series with each INA3221 input sufficiently protects the inputs against this dV/dt failure up to the 26-V device rating. Selecting these resistors in the range noted has minimal effect on accuracy.

Copyright © 2012–2016, Texas Instruments Incorporated

8.5 Programming

8.5.1 Bus Overview

The INA3221 offers compatibility with both I^2C and SMBus interfaces. The I^2C and SMBus protocols are essentially compatible with one another.

The I^2C interface is used throughout this data sheet as the primary example, with the SMBus protocol specified only when a difference between the two systems is discussed. Two I/O lines, the serial clock (SCL) and data signal line (SDA), connect the INA3221 to the bus. Both SCL and SDA are open-drain connections.

The device that initiates a data transfer is called a *master*, and the devices controlled by the master are *slaves*. The bus must be controlled by the master device that generates the SCL, controls the bus access, and generates start and stop conditions.

To address a specific device, the master initiates a start condition by pulling SDA from a high to a low logic level while SCL is high. All slaves on the bus shift in the slave address byte on the SCL rising edge, with the last bit indicating whether a read or write operation is intended. During the ninth clock pulse, the slave being addressed responds to the master by generating an *acknowledge* bit and pulling SDA low.

Data transfer is then initiated and eight bits of data are sent, followed by an acknowledge bit. During data transfer, SDA must remain stable while SCL is high. Any change in SDA while SCL is high is interpreted as a start or stop condition.

After all data are transferred, the master generates a stop condition by pulling SDA from low to high while SCL is high. The INA3221 includes a 28-ms timeout on the interface to prevent locking up the bus.

8.5.1.1 Serial Bus Address

To communicate with the INA3221, the master must first address slave devices with a slave address byte. This byte consists of seven address bits and a direction bit to indicate whether the intended action is a read or write operation.

The INA3221 has one address pin, A0. Table 1 describes the pin logic levels for each of the four possible addresses. The state of the A0 pin is sampled on every bus communication and must be set before any activity on the interface occurs.

Table 1. Address Pins and Slave Addresses

A0	SLAVE ADDRESS
GND	1000000
VS	1000001
SDA	1000010
SCL	1000011

8.5.1.2 Serial Interface

The INA3221 only operates as a slave device on the I^2C bus and SMBus. Bus connections are made using the open-drain I/O lines, SDA and SCL. The SDA and SCL pins feature integrated spike-suppression filters and Schmitt triggers to minimize the effects of input spikes and bus noise. While there is spike suppression integrated into the digital I/O lines, use proper layout to minimize the amount of coupling into the communication lines. Noise introduction occurs from capacitively coupling signal edges between the two communication lines themselves, or from other switching noise sources present in the system. Routing traces in parallel with ground between layers on a printed circuit board (PCB) typically reduces the effects of coupling between the communication lines. Shield communication lines to reduce the possibility of unintended noise coupling into the digital I/O lines that could be incorrectly interpreted as start or stop commands.

The INA3221 supports a transmission protocol for Fast (1 kHz to 400 kHz) and High-speed (1 kHz to 2.44 MHz) modes. All data bytes are transmitted MSB first.

Copyright © 2012–2016, Texas Instruments Incorporated

8.5.2 Writing To and Reading From the INA3221

To access a specific INA3221 register, write the appropriate value to the register pointer. See Table 3 for a complete list of registers and corresponding addresses. The value for the register pointer, as shown in Figure 27, is the first byte transferred after the slave address byte with the R/$\overline{W}$ bit low. Every write operation to the INA3221 requires a register pointer value.

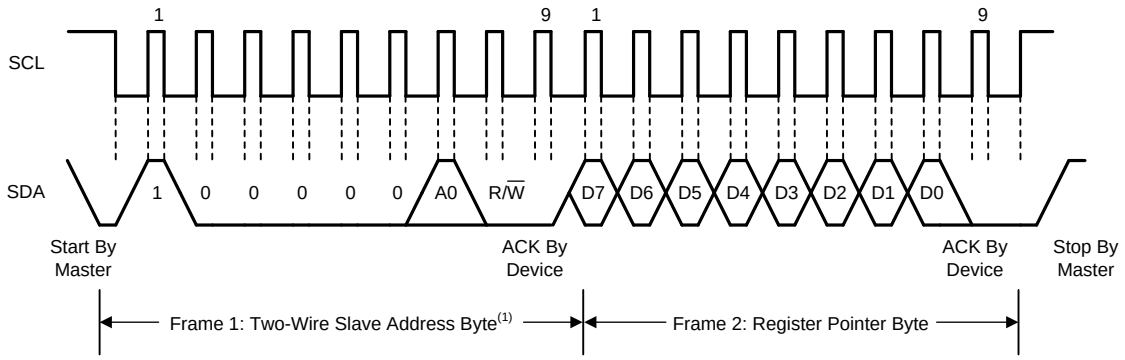

(1) The value of the Slave Address Byte is determined by the A0 pin setting; see Table 1.

Figure 27. Typical Register Pointer Set

Register writes begin with the first byte transmitted by the master. This byte is the slave address, with the R/$\overline{W}$ bit low. The INA3221 then acknowledges receipt of a valid address. The next byte transmitted by the master is the register address that data are written to. This register address value updates the register pointer to the desired register. The next two bytes are written to the register addressed by the register pointer. The INA3221 acknowledges receipt of each data byte. The master terminates data transfer by generating a start or stop condition.

When reading from the INA3221, the last value stored in the register pointer by a write operation determines which register is read during a read operation. To change the register pointer for a read operation, write a new value to the register pointer. This write is accomplished by issuing a slave address byte with the R/$\overline{W}$ bit low, followed by the register pointer byte. No additional data are required. The master then generates a start condition and sends the slave address byte with the R/$\overline{W}$ bit high to initiate the read command. The next byte is transmitted by the slave and is the most significant byte of the register indicated by the register pointer. This byte is followed by an acknowledge from the master; then the slave transmits the least significant byte. The master acknowledges receipt of the data byte. The master terminates data transfer by generating a *not-acknowledge* after receiving any data byte, or generating a start or stop condition. If repeated reads from the same register are desired, it is not necessary to continually send the register pointer bytes; the INA3221 retains the register pointer value until it is changed by the next write operation.

Figure 28 and Figure 29 show the write and read operation timing diagrams, respectively. Note that register bytes are sent most-significant byte first, followed by the least significant byte.

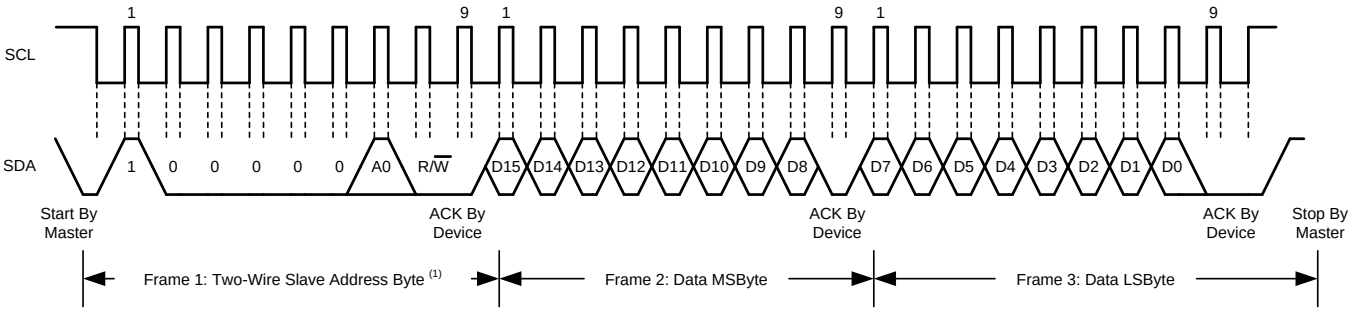

(1) The value of the slave address byte is determined by the A0 pin setting; see Table 1.

Figure 28. Timing Diagram for Write Word Format

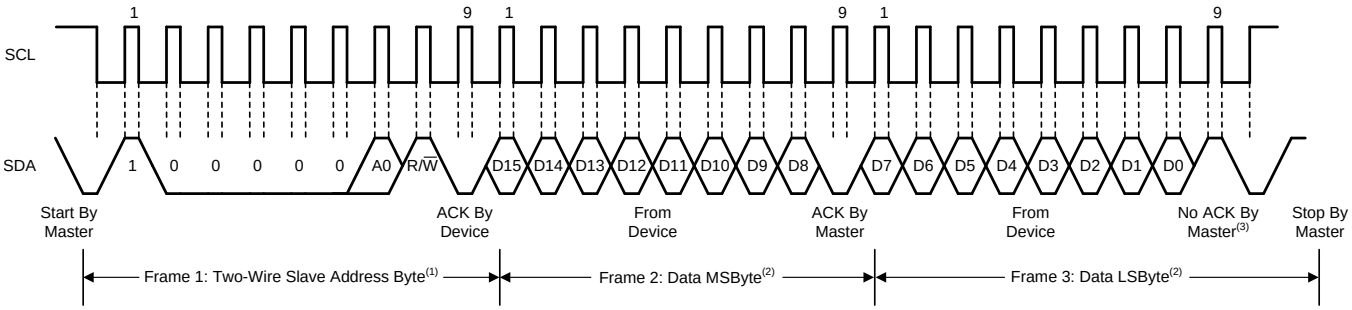

(1) The value of the slave address byte is determined by the A0 pin setting; see Table 1.

(2) Read data are from the last register pointer location. If a new register is desired, the register pointer must be updated. See Figure 27.

(3) The master can also send an ACK.

Figure 29. Timing Diagram for Read Word Format

Figure 30 shows the timing diagram for the SMBus Alert response operation.

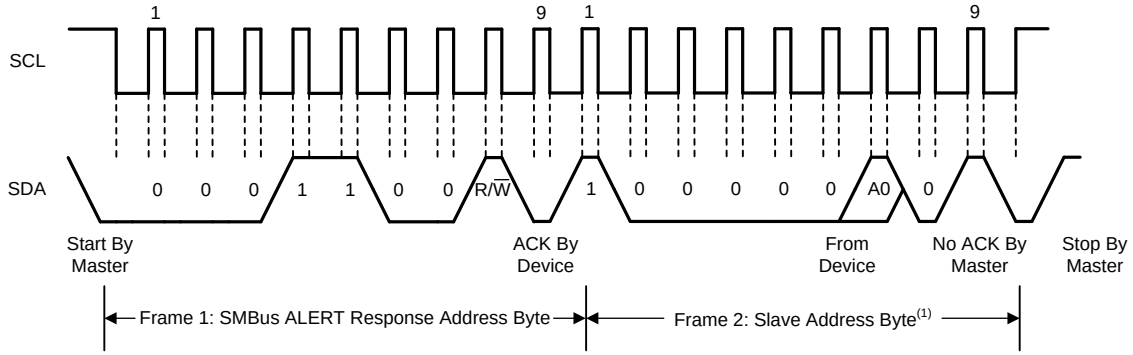

(1) The value of the Slave Address Byte is determined by the A0 pin setting; see Table 1.

Figure 30. Timing Diagram for SMBus Alert

8.5.2.1 High-Speed I²C Mode

When the bus is idle, the SDA and SCL lines are pulled high by the pull-up resistors. The master generates a start condition followed by a valid serial byte with the high-speed (Hs) master code *00001XXX*. This transmission is made in fast (400 kHz) or standard (100 kHz) (F/S) mode at no more than 400 kHz. The INA3221 does not acknowledge the Hs master code, but does recognize it and switches its internal filters to support 2.44-MHz operation.

The master then generates a repeated start condition (a repeated start condition has the same timing as the start condition). After this repeated start condition, the protocol is the same as F/S mode, except that transmission speeds up to 2.44 MHz are allowed. Instead of using a stop condition, the master uses a repeated start conditions to secure the bus in Hs mode. A stop condition ends the Hs mode, and switches all internal INA3221 filters to support F/S mode.

Figure 31 shows the bus timing, and Table 2 lists the bus timing definitions.

Copyright © 2012–2016, Texas Instruments Incorporated

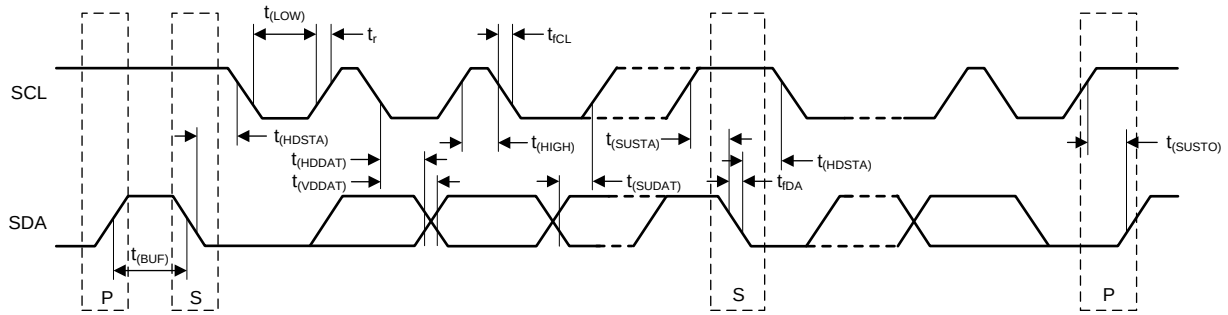

Figure 31. Bus Timing

Table 2. Bus Timing Definitions(1)

PARAMETER		FAST MODE		HIGH-SPEED MODE		UNIT
		MIN	MAX	MIN	MAX	
$f_{(SCL)}$	SCL operating frequency	0.001	0.4	0.001	2.44	MHz
$t_{(BUF)}$	Bus free time between stop and start conditions	1300		160		ns
$t_{(HDSTA)}$	Hold time after repeated START condition. After this period, the first clock is generated.	600		160		ns
$t_{(SUSTA)}$	Repeated start condition setup time	600		160		ns
$t_{(SUSTO)}$	STOP condition setup time	600		160		ns
$t_{(HDDAT)}$	Data hold time	0		0		ns
$t_{(VDDAT)}$	Data valid time		1200		260	ns
$t_{(SUDAT)}$	Data setup time	100		10		ns
$t_{(LOW)}$	SCL clock low period	1300		270		ns
$t_{(HIGH)}$	SCL clock high period	600		60		ns
t_{fDA}	Data fall time		500		150	ns
t_{fCL}	Clock fall time		300		40	ns
t_r	Clock rise time		300		40	ns
	Clock rise time for SCLK ≤ 100 kHz		1000			ns

(1) Values based on a statistical analysis of a one-time sample of devices. Minimum and maximum values are not production tested. A0 = A1 = 0.

8.5.3 SMBus Alert Response

The INA3221 responds to the SMBus alert response address. The SMBus alert response provides a quick fault identification for simple slave devices. When an alert occurs, the master broadcasts the alert response slave address (0001 100) with the R/$\overline{W}$ bit set high. Following this alert response, any slave devices that generated an alert identify themselves by acknowledging the alert response, and sending their respective address on the bus.

The alert response can activate several different slave devices simultaneously, similar to the I^2C general call. If more than one slave attempts to respond, bus arbitration rules apply. The losing device does not generate an acknowledge, and continues to hold the alert line low until the interrupt is cleared.

Copyright © 2012–2016, Texas Instruments Incorporated

8.6 Register Maps

The INA3221 uses a bank of registers for holding configuration settings, measurement results, minimum and maximum limits, and status information. Table 3 summarizes the INA3221 registers; see the *Functional Block Diagram* section for an illustration of the registers.

8.6.1 Summary of Register Set

Table 3. Summary of Register Set

POINTER ADDRESS (Hex)	REGISTER NAME	DESCRIPTION	POWER-ON RESET		TYPE(1)
			BINARY	HEX	
0	Configuration	All-register reset, shunt and bus voltage ADC conversion times and averaging, operating mode.	01110001 00100111	7127	R/$\overline{W}$
1	Channel-1 Shunt Voltage	Averaged shunt voltage value.	00000000 00000000	0000	R
2	Channel-1 Bus Voltage	Averaged bus voltage value.	00000000 00000000	0000	R
3	Channel-2 Shunt Voltage	Averaged shunt voltage value.	00000000 00000000	0000	R
4	Channel-2 Bus Voltage	Averaged bus voltage value.	00000000 00000000	0000	R
5	Channel-3 Shunt Voltage	Averaged shunt voltage value.	00000000 00000000	0000	R
6	Channel-3 Bus Voltage	Averaged bus voltage value.	00000000 00000000	0000	R
7	Channel-1 Critical Alert Limit	Contains limit value to compare each conversion value to determine if the corresponding limit has been exceeded.	01111111 11111000	7FF8	R/$\overline{W}$
8	Channel-1 Warning Alert Limit	Contains limit value to compare to averaged measurement to determine if the corresponding limit has been exceeded.	01111111 11111000	7FF8	R/$\overline{W}$
9	Channel-2 Critical Alert Limit	Contains limit value to compare each conversion value to determine if the corresponding limit has been exceeded.	01111111 11111000	7FF8	R/$\overline{W}$
A	Channel-2 Warning Alert Limit	Contains limit value to compare to averaged measurement to determine if the corresponding limit has been exceeded.	01111111 11111000	7FF8	R/$\overline{W}$
B	Channel-3 Critical Alert Limit	Contains limit value to compare each conversion value to determine if the corresponding limit has been exceeded.	01111111 11111000	7FF8	R/$\overline{W}$
C	Channel-3 Warning Alert Limit	Contains limit value to compare to averaged measurement to determine if the corresponding limit has been exceeded.	01111111 11111000	7FF8	R/$\overline{W}$
D	Shunt-Voltage Sum	Contains the summed value of the each of the selected shunt voltage conversions.	00000000 00000000	0000	R
E	Shunt-Voltage Sum Limit	Contains limit value to compare to the Shunt Voltage Sum register to determine if the corresponding limit has been exceeded.	01111111 11111110	7FFE	R/$\overline{W}$
F	Mask/Enable	Alert configuration, alert status indication, summation control and status.	00000000 00000010	0002	R/$\overline{W}$
10	Power-Valid Upper Limit	Contains limit value to compare all bus voltage conversions to determine if the Power Valid level has been reached.	00100111 00010000	2710	R/$\overline{W}$
11	Power-Valid Lower Limit	Contains limit value to compare all bus voltage conversions to determine if the any voltage rail has dropped below the Power Valid range.	00100011 00101000	2328	R/$\overline{W}$
FE	Manufacturer ID	Contains unique manufacturer identification number.	01010100 01001001	5449	R
FF	Die ID	Contains unique die identification number.	00110010 00100000	3220	R

(1) Type: R = read-only, R/$\overline{W}$ = read/write.

Copyright © 2012–2016, Texas Instruments Incorporated

8.6.2 Register Descriptions

All 16-bit INA3221 registers are two 8-bit bytes via the I^2C interface. Table 4 shows a register map for the INA3221.

Table 4. Register Map

REGISTER	ADDRESS (Hex)	D15	D14	D13	D12	D11	D10	D9	D8	D7	D6	D5	D4	D3	D2	D1	D0
Configuration	00	RST	$CH1_{en}$	$CH2_{en}$	$CH3_{en}$	AVG2	AVG1	AVG0	$V_{BUS}CT2$	$V_{BUS}CT1$	$V_{BUS}CT0$	$V_{SH}CT2$	$V_{SH}CT1$	$V_{SH}CT0$	MODE3	MODE2	MODE1
Channel-1 Shunt Voltage	01	SIGN	SD11	SD10	SD9	SD8	SD7	SD6	SD5	SD4	SD3	SD2	SD1	SD0	—	—	—
Channel-1 Bus Voltage	02	SIGN	BD11	BD10	BD9	BD8	BD7	BD6	BD5	BD4	BD3	BD2	BD1	BD0	—	—	—
Channel-2 Shunt Voltage	03	SIGN	SD11	SD10	SD9	SD8	SD7	SD6	SD5	SD4	SD3	SD2	SD1	SD0	—	—	—
Channel-2 Bus Voltage	04	SIGN	BD11	BD10	BD9	BD8	BD7	BD6	BD5	BD4	BD3	BD2	BD1	BD0	—	—	—
Channel-3 Shunt Voltage	05	SIGN	SD11	SD10	SD9	SD8	SD7	SD6	SD5	SD4	SD3	SD2	SD1	SD0	—	—	—
Channel-3 Bus Voltage	06	SIGN	BD11	BD10	BD9	BD8	BD7	BD6	BD5	BD4	BD3	BD2	BD1	BD0	—	—	—
Channel-1 Critical-Alert Limit	07	C1L12	C1L11	C1L10	C1L9	C1L8	C1L7	C1L6	C1L5	C1L4	C1L3	C1L2	C1L1	C1L0	—	—	—
Channel-1 Warning-Alert Limit	08	W1L12	W1L11	W1L10	W1L9	W1L8	W1L7	W1L6	W1L5	W1L4	W1L3	W1L2	W1L1	W1L0	—	—	—
Channel-2 Critical-Alert Limit	09	C2L12	C2L11	C2L10	C2L9	C2L8	C2L7	C2L6	C2L5	C2L4	C2L3	C2L2	C2L1	C2L0	—	—	—
Channel-2 Warning-Alert Limit	0A	W2L12	W2L11	W2L10	W2L9	W2L8	W2L7	W2L6	W2L5	W2L4	W2L3	W2L2	W2L1	W2L0	—	—	—
Channel-3 Critical-Alert Limit	0B	C3L12	C3L11	C3L10	C3L9	C3L8	C3L7	C3L6	C3L5	C3L4	C3L3	C3L2	C3L1	C3L0	—	—	—
Channel-3 Warning-Alert Limit	0C	W3L12	W3L11	W3L10	W3L9	W3L8	W3L7	W3L6	W3L5	W3L4	W3L3	W3L2	W3L1	W3L0	—	—	—
Shunt-Voltage Sum	0D	SIGN	SV13	SV12	SV11	SV10	SV9	SV8	SV7	SV6	SV5	SV4	SV3	SV2	SV1	SV0	—
Shunt-Voltage Sum Limit	0E	SIGN	SVL13	SVL12	SVL11	SVL10	SVL9	SVL8	SVL7	SVL6	SVL5	SVL4	SVL3	SVL2	SVL1	SVL0	—
Mask/Enable	0F	—	SCC1	SCC2	SCC3	WEN	CEN	CF1	CF2	CF3	SF	WF1	WF2	WF3	PVF	TCF	CVRF
Power-Valid Upper Limit	10	PVU12	PVU11	PVU10	PVU9	PVU8	PVU7	PVU6	PVU5	PVU4	PVU3	PVU2	PVU1	PVU0	—	—	—
Power-Valid Lower Limit	11	PVL12	PVL11	PVL10	PVL9	PVL8	PVL7	PVL6	PVL5	PVL4	PVL3	PVL2	PVL1	PVL0	—	—	—
Manufacturer ID	FE	0	1	0	1	0	1	0	0	0	1	0	0	1	0	0	1
Die ID	FF	0	0	1	1	0	0	1	0	0	0	1	0	0	0	0	0

Copyright © 2012–2016, Texas Instruments Incorporated

8.6.2.1 Configuration Register (address = 00h) [reset = 7127h]

The Configuration register settings control the operating modes for the shunt- and bus-voltage measurements for the three input channels. This register controls the conversion time settings for both the shunt- and bus-voltage measurements and the averaging mode used. The Configuration register is used to independently enable or disable each channel, as well as select the operating mode that controls which signals are selected to be measured.

This register can be read from at any time without impacting or affecting either device settings or conversions in progress. Writing to this register halts any conversion in progress until the write sequence is completed, resulting in a new conversion starting, based on the new Configuration register contents. This architecture prevents any uncertainty in the conditions used for the next completed conversion.

Figure 32. Configuration Register

15	14	13	12	11	10	9	8	7	6	5	4	3	2	1	0
RST	$CH1_{en}$	$CH2_{en}$	$CH3_{en}$	AVG2	AVG1	AVG0	V_{BUS} CT2	V_{BUS} CT1	V_{BUS} CT0	V_{SH} CT2	V_{SH} CT1	V_{SH} CT0	MODE 3	MODE 2	MODE 1
RW-0	RW-1	RW-1	RW-1	RW-0	RW-0	RW-0	RW-1	RW-0	RW-0	RW-1	RW-0	RW-0	RW-1	RW-1	RW-1

LEGEND: R/W = Read/Write; R = Read only; -n = value after reset

Table 5. Configuration Register Field Descriptions

Bit	Field	Type	Reset	Description
15	RST	R/W	0h	Reset bit. Set this bit = 1 to generate a system reset that is the same as a power-on reset (POR). This bit resets all registers to default values and self-clears.
14	$CH1_{en}$	R/W	7h	Channel enable mode. These bits allow each channel to be independently enabled or disabled. 0 = Channel disable 1 = Channel enable (default)
13	$CH2_{en}$			
12	$CH3_{en}$			
11-9	AVG2-0	R/W	0h	Averaging mode. These bits set the number of samples that are collected and averaged together. 000 = 1 (default) 001 = 4 010 = 16 011 = 64 100 = 128 101 = 256 110 = 512 111 = 1024
8-6	V_{BUS}CT2-0	R/W	4h	Bus-voltage conversion time. These bits set the conversion time for the bus-voltage measurement. 000 = 140 µs 001 = 204 µs 010 = 332 µs 011 = 588 µs 100 = 1.1 ms (default) 101 = 2.116 ms 110 = 4.156 ms 111 = 8.244 ms
5-3	V_{SH}CT2-0	R/W	4h	Shunt-voltage conversion time. These bits set the conversion time for the shunt-voltage measurement. The conversion-time bit settings for V_{SH}CT2-0 are the same as V_{BUS}CT2-0 (bits 8-6) listed in the previous row.
2-0	MODE3-1	R/W	7h	Operating mode. These bits select continuous, single-shot (triggered), or power-down mode of operation. These bits default to continuous shunt and bus mode. 000 = Power-down 001 = Shunt voltage, single-shot (triggered) 010 = Bus voltage, single-shot (triggered) 011 = Shunt and bus, single-shot (triggered) 100 = Power-down 101 = Shunt voltage, continuous 110 = Bus voltage, continuous 111 = Shunt and bus, continuous (default)

Copyright © 2012–2016, Texas Instruments Incorporated

8.6.2.2 Channel-1 Shunt-Voltage Register (address = 01h), [reset = 00h]

This register contains the averaged shunt-voltage measurement for channel 1. This register stores the current shunt-voltage reading, V_{SHUNT}, for channel 1. Negative numbers are represented in twos complement format. Generate the twos complement of a negative number by complementing the absolute value binary number and adding 1. Extend the sign, denoting a negative number by setting MSB = 1.

Full-scale range = 163.8 mV (decimal = 7FF8); LSB (SD0): 40 µV.

Example: For a value of V_{SHUNT} = –80 mV:

1. Take the absolute value: 80 mV
2. Translate this number to a whole decimal number (80 mV / 40 µV) = 2000
3. Convert this number to binary = 011 1110 1000 0_ _ _ (last three bits are set to 0)
4. Complement the binary result = 100 0001 0111 1111
5. Add 1 to the complement to create the twos complement result = 100 0001 1000 0000
6. Extend the sign and create the 16-bit word: 1100 0001 1000 0000 = C180h

Figure 33. Channel-1 Shunt-Voltage Register

15	14	13	12	11	10	9	8	7	6	5	4	3	2	1	0
SIGN	SD11	SD10	SD9	SD8	SD7	SD6	SD5	SD4	SD3	SD2	SD1	SD0	—	—	—
R-0	R-0	R-0	R-0	R-0	R-0	R-0	R-0	R-0	R-0	R-0	R-0	R-0	R-0	R-0	R-0

LEGEND: R/W = Read/Write; R = Read only; -n = value after reset

Table 6. Channel-1 Shunt-Voltage Register Field Descriptions

Bit	Field	Type	Reset	Description
15	SIGN	R	0h	Sign bit. 0 = positive number 1 = negative number in twos complement format
14-3	SD11-0	R	0h	Channel-1 shunt-voltage data bits
2-0	Reserved	R	0h	Reserved

8.6.2.3 Channel-1 Bus-Voltage Register (address = 02h) [reset = 00h]

This register stores the bus voltage reading, V_{BUS}, for channel 1. Full-scale range = 32.76 V (decimal = 7FF8); LSB (BD0) = 8 mV. Although the input range is 26 V, the full-scale range of the ADC scaling is 32.76 V. Do not apply more than 26 V.

Figure 34. Channel-1 Bus-Voltage Register

15	14	13	12	11	10	9	8	7	6	5	4	3	2	1	0
SIGN	BD11	BD10	BD9	BD8	BD7	BD6	BD5	BD4	BD3	BD2	BD1	BD0	—	—	—
R-0	R-0	R-0	R-0	R-0	R-0	R-0	R-0	R-0	R-0	R-0	R-0	R-0	R-0	R-0	R-0

LEGEND: R/W = Read/Write; R = Read only; -n = value after reset

Table 7. Channel-1 Bus-Voltage Register Field Descriptions

Bit	Field	Type	Reset	Description
15	SIGN	R	0h	Sign bit. 0 = positive number 1 = negative number in twos complement format.
14-3	BD11-0	R	0h	Channel-1 bus-voltage data bits
2-0	Reserved	R	0h	Reserved

Copyright © 2012–2016, Texas Instruments Incorporated

8.6.2.4 Channel-2 Shunt-Voltage Register (address = 03h) [reset = 00h]

This register contains the averaged shunt voltage measurement for channel 2. Full-scale range = 163.8 mV (decimal = 7FF8); LSB (SD0): 40 µV. Although the input range is 26 V, the full-scale range of the ADC scaling is 32.76 V. Do not apply more than 26 V.

Figure 35. Channel-2 Shunt-Voltage Register

15	14	13	12	11	10	9	8	7	6	5	4	3	2	1	0
SIGN	SD11	SD10	SD9	SD8	SD7	SD6	SD5	SD4	SD3	SD2	SD1	SD0	—	—	—
R-0	R-0	R-0	R-0	R-0	R-0	R-0	R-0	R-0	R-0	R-0	R-0	R-0	R-0	R-0	R-0

LEGEND: R/W = Read/Write; R = Read only; -n = value after reset

Table 8. Channel-2 Shunt-Voltage Register Field Descriptions

Bit	Field	Type	Reset	Description
15	SIGN	R	0h	Sign bit. 0 = positive number 1 = negative number in twos complement format
14-3	SD11-0	R	0h	Channel-2 shunt-voltage data bits
2-0	Reserved	R	0h	Reserved

8.6.2.5 Channel-2 Bus-Voltage Register (address = 04h) [reset = 00h]

This register stores the bus voltage reading, V_{BUS}, for channel 2. Full-scale range = 32.76 V (decimal = 7FF8); LSB (BD0) = 8 mV. Although the input range is 26 V, the full-scale range of the ADC scaling is 32.76 V. Do not apply more than 26 V.

Figure 36. Channel-2 Bus-Voltage Register

15	14	13	12	11	10	9	8	7	6	5	4	3	2	1	0
SIGN	BD11	BD10	BD9	BD8	BD7	BD6	BD5	BD4	BD3	BD2	BD1	BD0	—	—	—
R-0	R-0	R-0	R-0	R-0	R-0	R-0	R-0	R-0	R-0	R-0	R-0	R-0	R-0	R-0	R-0

LEGEND: R/W = Read/Write; R = Read only; -n = value after reset

Table 9. Channel-2 Bus-Voltage Register Field Descriptions

Bit	Field	Type	Reset	Description
15	SIGN	R	0h	Sign bit. 0 = positive number 1 = negative number in twos complement format
14-3	BD11-0	R	0h	Channel-2 bus-voltage data bits
2-0	Reserved	R	0h	Reserved

Copyright © 2012–2016, Texas Instruments Incorporated

8.6.2.6 Channel-3 Shunt-Voltage Register (address = 05h) [reset = 00h]

This register contains the averaged shunt voltage measurement for channel 3. Full-scale range = 163.8 mV (decimal = 7FF8); LSB (SD0): 40 µV.

Figure 37. Channel-3 Shunt-Voltage Register

15	14	13	12	11	10	9	8	7	6	5	4	3	2	1	0
SIGN	SD11	SD10	SD9	SD8	SD7	SD6	SD5	SD4	SD3	SD2	SD1	SD0	—	—	—
R-0	R-0	R-0	R-0	R-0	R-0	R-0	R-0	R-0	R-0	R-0	R-0	R-0	R-0	R-0	R-0

LEGEND: R/W = Read/Write; R = Read only; -n = value after reset

Table 10. Channel-3 Shunt-Voltage Register Field Descriptions

Bit	Field	Type	Reset	Description
15	SIGN	R	0h	Sign bit. 0 = positive number 1 = negative number in twos complement format
14-3	SD11-0	R	0h	Channel-3 shunt-voltage data bits
2-0	Reserved	R	0h	Reserved

8.6.2.7 Channel-3 Bus-Voltage Register (address = 06h) [reset = 00h]

This register stores the bus voltage reading, V_{BUS}, for channel 3. Full-scale range = 32.76 V (decimal = 7FF8); LSB (BD0) = 8 mV. Although the input range is 26 V, the full-scale range of the ADC scaling is 32.76 V. Do not apply more than 26 V.

Figure 38. Channel-3 Bus-Voltage Register

15	14	13	12	11	10	9	8	7	6	5	4	3	2	1	0
SIGN	BD11	BD10	BD9	BD8	BD7	BD6	BD5	BD4	BD3	BD2	BD1	BD0	—	—	—
R-0	R-0	R-0	R-0	R-0	R-0	R-0	R-0	R-0	R-0	R-0	R-0	R-0	R-0	R-0	R-0

LEGEND: R/W = Read/Write; R = Read only; -n = value after reset

Table 11. Channel-3 Bus-Voltage Register Field Descriptions

Bit	Field	Type	Reset	Description
15	SIGN	R	0h	Sign bit. 0 = positive number 1 = negative number in twos complement format
14-3	BD11-0	R	0h	Channel-3 bus-voltage data bits
2-0	Reserved	R	0h	Reserved

Copyright © 2012–2016, Texas Instruments Incorporated

8.6.2.8 Channel-1 Critical-Alert Limit Register (address = 07h) [reset = 7FF8h]

This register contains the value used to compare to each shunt voltage conversion on channel 1 to detect fast overcurrent events.

Figure 39. Channel-1 Critical-Alert Limit Register

15	14	13	12	11	10	9	8	7	6	5	4	3	2	1	0
C1L12	C1L11	C1L10	C1L9	C1L8	C1L7	C1L6	C1L5	C1L4	C1L3	C1L2	C1L1	C1L0	—	—	—
RW-0	RW-1	RW-1	RW-1	RW-1	RW-1	RW-1	RW-1	RW-1	RW-1	RW-1	RW-1	RW-1	RW-0	RW-0	RW-0

LEGEND: R/W = Read/Write; R = Read only; -n = value after reset

Table 12. Channel-1 Critical-Alert Limit Register Field Descriptions

Bit	Field	Type	Reset	Description
15-3	C1L12-0	R/W	FFFh	Channel-1 critical-alert-limit data bits
2-0	Reserved	R/W	0h	Reserved

8.6.2.9 Warning-Alert Channel-1 Limit Register (address = 08h) [reset = 7FF8h]

This register contains the value used to compare to the averaged shunt voltage value of channel 1 to detect a longer duration overcurrent event.

Figure 40. Channel-1 Warning-Alert Limit Register

15	14	13	12	11	10	9	8	7	6	5	4	3	2	1	0
W1L12	W1L11	W1L10	W1L9	W1L8	W1L7	W1L6	W1L5	W1L4	W1L3	W1L2	W1L1	W1L0	—	—	—
RW-0	RW-1	RW-1	RW-1	RW-1	RW-1	RW-1	RW-1	RW-1	RW-1	RW-1	RW-1	RW-1	RW-0	RW-0	RW-0

LEGEND: R/W = Read/Write; R = Read only; -n = value after reset

Table 13. Channel-1 Warning-Alert Limit Register Field Descriptions

Bit	Field	Type	Reset	Description
15-3	W1L12-0	R/W	FFFh	Channel-1 warning-alert-limit data bits
2-0	Reserved	R/W	0h	Reserved

8.6.2.10 Channel-2 Critical-Alert Limit Register (address = 09h) [reset = 7FF8h]

This register contains the value used to compare to each shunt voltage conversion on channel 2 to detect fast overcurrent events.

Figure 41. Channel-2 Critical-Alert Limit Register

15	14	13	12	11	10	9	8	7	6	5	4	3	2	1	0
C2L12	C2L11	C2L10	C2L9	C2L8	C2L7	C2L6	C2L5	C2L4	C2L3	C2L2	C2L1	C2L0	—	—	—
RW-0	RW-1	RW-1	RW-1	RW-1	RW-1	RW-1	RW-1	RW-1	RW-1	RW-1	RW-1	RW-1	RW-0	RW-0	RW-0

LEGEND: R/W = Read/Write; R = Read only; -n = value after reset

Table 14. Channel-2 Critical-Alert Limit Register Field Descriptions

Bit	Field	Type	Reset	Description
15-3	C2L12-0	R/W	FFFh	Channel-2 critical-alert-limit data bits
2-0	Reserved	R/W	0h	Reserved

Copyright © 2012–2016, Texas Instruments Incorporated

8.6.2.11 Channel-2 Warning-Alert Limit Register (address = 0Ah) [reset = 7FF8h]

This register contains the value used to compare to the averaged shunt voltage value of channel 2 to detect a longer duration overcurrent event.

Figure 42. Channel-2 Warning-Alert Limit Register

15	14	13	12	11	10	9	8	7	6	5	4	3	2	1	0
W2L12	W2L11	W2L10	W2L9	W2L8	W2L7	W2L6	W2L5	W2L4	W2L3	W2L2	W2L1	W2L0	—	—	—
RW-0	RW-1	RW-1	RW-1	RW-1	RW-1	RW-1	RW-1	RW-1	RW-1	RW-1	RW-1	RW-1	RW-0	RW-0	RW-0

LEGEND: R/W = Read/Write; R = Read only; -n = value after reset

Table 15. Channel-2 Warning-Alert Limit Register Field Descriptions

Bit	Field	Type	Reset	Description
15-3	W2L12-0	R/W	FFFh	Channel-2 warning-alert-limit data bits
2-0	Reserved	R/W	0h	Reserved

8.6.2.12 Channel-3 Critical-Alert Limit Register (address = 0Bh) [reset = 7FF8h]

This register contains the value used to compare to each shunt voltage conversion on channel 3 to detect fast overcurrent events.

Figure 43. Channel-3 Critical-Alert Limit Register

15	14	13	12	11	10	9	8	7	6	5	4	3	2	1	0
C3L12	C3L11	C3L10	C3L9	C3L8	C3L7	C3L6	C3L5	C3L4	C3L3	C3L2	C3L1	C3L0	—	—	—
RW-0	RW-1	RW-1	RW-1	RW-1	RW-1	RW-1	RW-1	RW-1	RW-1	RW-1	RW-1	RW-1	RW-0	RW-0	RW-0

LEGEND: R/W = Read/Write; R = Read only; -n = value after reset

Table 16. Channel-3 Critical-Alert Limit Register Field Descriptions

Bit	Field	Type	Reset	Description
15-3	C3L12-0	R/W	FFFh	Channel-3 critical-alert-limit data bits
2-0	Reserved	R/W	0h	Reserved

8.6.2.13 Channel-3 Warning-Alert Limit Register (address = 0Ch) [reset = 7FF8h]

This register contains the value used to compare to the averaged shunt voltage value of channel 3 to detect a longer duration overcurrent event.

Figure 44. Channel-3 Warning-Alert Limit Register

15	14	13	12	11	10	9	8	7	6	5	4	3	2	1	0
W3L12	W3L11	W3L10	W3L9	W3L8	W3L7	W3L6	W3L5	W3L4	W3L3	W3L2	W3L1	W3L0	—	—	—
RW-0	RW-1	RW-1	RW-1	RW-1	RW-1	RW-1	RW-1	RW-1	RW-1	RW-1	RW-1	RW-1	RW-0	RW-0	RW-0

LEGEND: R/W = Read/Write; R = Read only; -n = value after reset

Table 17. Channel-3 Warning-Alert Limit Register Field Descriptions

Bit	Field	Type	Reset	Description
15-3	W3L12-0	R/W	FFFh	Channel-3 warning-alert limit data bits
2-0	Reserved	R/W	0h	Reserved

Copyright © 2012–2016, Texas Instruments Incorporated

8.6.2.14 Shunt-Voltage Sum Register (address = 0Dh) [reset = 00h]

This register contains the sum of the single conversion shunt voltages of the selected channels based on the summation control bits 12, 13, and 14 in the Mask/Enable register.

This register is updated with the most recent sum following each complete cycle of all selected channels. The Shunt-Voltage Sum register LSB value is 40 µV.

Figure 45. Shunt-Voltage Sum Register

15	14	13	12	11	10	9	8	7	6	5	4	3	2	1	0
SIGN	SV13	SV12	SV11	SV10	SV9	SV8	SV7	SV6	SV5	SV4	SV3	SV2	SV1	SV0	—
R-0	R-0	R-0	R-0	R-0	R-0	R-0	R-0	R-0	R-0	R-0	R-0	R-0	R-0	R-0	R-0

LEGEND: R/W = Read/Write; R = Read only; -n = value after reset

Table 18. Shunt-Voltage Sum Register Field Descriptions

Bit	Field	Type	Reset	Description
15	SIGN	R	0h	Sign bit. 0 = positive number 1 = negative number in twos complement format
14-1	SV13-0	R	0h	Shunt-voltage sum data bits
0	Reserved	R	0h	Reserved

8.6.2.15 Shunt-Voltage Sum-Limit Register (address = 0Eh) [reset = 7FFEh]

This register contains the value that is compared to the Shunt-Voltage Sum register value following each completed cycle of all selected channels to detect for system overcurrent events. The Shunt-Voltage Sum-Limit register LSB value is 40 µV.

Figure 46. Shunt-Voltage Sum-Limit Register

15	14	13	12	11	10	9	8	7	6	5	4	3	2	1	0
SIGN	SVL13	SVL12	SVL11	SVL10	SVL9	SVL8	SVL7	SVL6	SVL5	SVL4	SVL3	SVL2	SVL1	SVL0	—
RW-0	RW-1	RW-1	RW-1	RW-1	RW-1	RW-1	RW-1	RW-1	RW-1	RW-1	RW-1	RW-1	RW-1	RW-1	RW-0

LEGEND: R/W = Read/Write; R = Read only; -n = value after reset

Table 19. Shunt-Voltage Sum-Limit Register Field Descriptions

Bit	Field	Type	Reset	Description
15	SIGN	R	0h	Sign bit. 0 = positive number 1 = negative number in twos complement format
14-1	SVL13-0	R	0h	Shunt-voltage sum-limit data bits
0	Reserved	R	0h	Reserved

Copyright © 2012–2016, Texas Instruments Incorporated

8.6.2.16 Mask/Enable Register (address = 0Fh) [reset = 0002h]

This register selects which function is enabled to control the Critical alert and Warning alert pins, and how each warning alert responds to the corresponding channel. Read the Mask/Enable register to clear any flag results present. Writing to this register does not clear the flag bit status. To make sure that there is no uncertainty in the warning function setting that resulted in a flag bit being set, the Mask/Enable register should be read from to clear the flag bit status before changing the warning function setting.

Figure 47. Mask/Enable Register

15	14	13	12	11	10	9	8	7	6	5	4	3	2	1	0
—	SCC1	SCC2	SCC3	WEN	CEN	CF1	CF2	CF3	SF	WF1	WF2	WF3	PVF	TCF	CVRF
RW-0	RW-0	RW-0	RW-0	RW-0	RW-0	RW-0	RW-0	RW-0	RW-0	RW-0	RW-0	RW-0	RW-0	RW-1	RW-0

LEGEND: R/W = Read/Write; R = Read only; -n = value after reset

Table 20. Mask/Enable Register Field Descriptions

Bit	Field	Type	Reset	Description
15	Reserved	R/W	0h	Reserved
14-12	SCC1-3	R/W	0h	Summation channel control. These bits determine which shunt voltage measurement channels are enabled to fill the Shunt-Voltage Sum register. The selection of these bits does not impact the individual channel enable or disable status, or the corresponding channel measurements. The corresponding bit is used to select if the channel is used to fill the Shunt-Voltage Sum register. 0 = Disabled (default) 1 = Enabled
11	WEN	R/W	0h	Warning alert latch enable. These bits configure the latching feature of the Warning alert pin. 0 = Transparent (default) 1 = Latch enabled
10	CEN	R/W	0h	Critical alert latch enable. These bits configure the latching feature of the Critical alert pin. 0 = Transparent (default) 1 = Latch enabled
9-7	CF1-3	R/W	0h	Critical-alert flag indicator. These bits are asserted if the corresponding channel measurement has exceeded the critical alert limit resulting in the Critical alert pin being asserted. Read these bits to determine which channel caused the critical alert. The critical alert flag bits are cleared when the Mask/Enable register is read back.
6	SF	R/W	0h	Summation-alert flag indicator. This bit is asserted if the Shunt Voltage Sum register exceeds the Shunt Voltage Sum Limit register. If the summation alert flag is asserted, the Critical alert pin is also asserted. The Summation Alert Flag bit is cleared when the Mask/Enable register is read back.
5-3	WF1-3	R/W	0h	Warning-alert flag indicator. These bits are asserted if the corresponding channel averaged measurement has exceeded the warning alert limit, resulting in the Warning alert pin being asserted. Read these bits to determine which channel caused the warning alert. The Warning Alert Flag bits clear when the Mask/Enable register is read back.
2	PVF	R/W	0h	Power-valid-alert flag indicator. This bit can be used to be able to determine if the power valid (PV) alert pin has been asserted through software rather than hardware. The bit setting corresponds to the status of the PV pin. This bit does not clear until the condition that caused the alert is removed, and the PV pin has cleared.
1	TCF	R/W	11h	Timing-control-alert flag indicator. Use this bit to determine if the timing control (TC) alert pin has been asserted through software rather than hardware. The bit setting corresponds to the status of the TC pin. This bit does not clear after it has been asserted unless the power is recycled or a software reset is issued. The default state for the timing control alert flag is high.
0	CVRF	R/W	0h	Conversion-ready flag. Although the INA3221 can be read at any time, and the data from the last conversion are available, the conversion ready bit is provided to help coordinate single-shot conversions. The conversion bit is set after all conversions are complete. Conversion ready clears under the following conditions: 1. Writing the Configuration register (except for power-down or disable-mode selections). 2. Reading the Mask/Enable register.

Copyright © 2012–2016, Texas Instruments Incorporated

8.6.2.17 Power-Valid Upper-Limit Register (address = 10h) [reset = 2710h]

This register contains the value used to determine if the power-valid conditions are met. The power-valid condition is reached when all bus-voltage channels exceed the value set in this limit register. When the power-valid condition is met, the PV alert pin asserts high to indicate that the INA3221 has confirmed all bus voltage channels are above the power-valid upper-limit value. In order for the power-valid conditions to be monitored, the bus measurements must be enabled through one of the corresponding MODE bits set in the Configuration register. The power-valid upper-limit LSB value is 8 mV. Power-on reset value is 2710h = 10.000 V.

Figure 48. Power-Valid Upper-Limit Register

15	14	13	12	11	10	9	8	7	6	5	4	3	2	1	0
SIGN	PVU11	PVU10	PVU9	PVU8	PVU7	PVU6	PVU5	PVU4	PVU3	PVU2	PVU1	PVU0	—	—	—
RW-0	RW-0	RW-1	RW-0	RW-0	RW-1	RW-1	RW-1	RW-0	RW-0	RW-0	RW-1	RW-0	RW-0	RW-0	RW-0

LEGEND: R/W = Read/Write; R = Read only; -n = value after reset

Table 21. Power-Valid Upper-Limit Register Field Descriptions

Bit	Field	Type	Reset	Description
15	SIGN	R/W	0h	Sign bit. 0 = positive number 1 = negative number in twos complement format
14-3	PVU11-0	R/W	4E2h	Power-valid upper-limit data bits
2-0	Reserved	R/W	0h	Reserved

8.6.2.18 Power-Valid Lower-Limit Register (address = 11h) [reset = 2328h]

This register contains the value used to determine if any of the bus-voltage channels drops below the power-valid lower-limit when the power-valid conditions are met. This limit contains the value used to compare all bus-channel readings to make sure that all channels remain above the power-valid lower-limit, thus maintaining the power-valid condition. If any bus-voltage channel drops below the power-valid lower-limit, the PV alert pin pulls low to indicate that the INA3221 detects a bus voltage reading below the power-valid lower-limit. In order for the power-valid condition to be monitored, the bus measurements must be enabled through the mode (MODE3-1) bits set in the Configuration register. The power-valid lower-limit LSB value is 8 mV. Power-on reset value is 2328h = 9.000 V.

Figure 49. Power-Valid Lower-Limit Register

15	14	13	12	11	10	9	8	7	6	5	4	3	2	1	0
SIGN	PVL11	PVL10	PVL9	PVL8	PVL7	PVL6	PVL5	PVL4	PVL3	PVL2	PVL1	PVL0	—	—	—
RW-0	RW-0	RW-1	RW-0	RW-0	RW-0	RW-1	RW-1	RW-0	RW-0	RW-1	RW-0	RW-1	RW-0	RW-0	RW-0

LEGEND: R/W = Read/Write; R = Read only; -n = value after reset

Table 22. Power-Valid Lower-Limit Register Field Descriptions

Bit	Field	Type	Reset	Description
15	SIGN	R/W	0h	Sign bit. 0 = positive number 1 = negative number in twos complement format
14-3	PVL11-0	R/W	465h	Power-valid lower-limit data bits
2-0	Reserved	R/W	0h	Reserved

Copyright © 2012–2016, Texas Instruments Incorporated

8.6.2.19 Manufacturer ID Register (address = FEh) [reset = 5449h]

This register contains a factory-programmable identification value that identifies this device as being manufactured by Texas Instruments. This register distinguishes this device from other devices that are on the same I^2C bus. The contents of this register are 5449h, or TI in ASCII.

Figure 50. Manufacturer ID Register

15	14	13	12	11	10	9	8	7	6	5	4	3	2	1	0
D15	D14	D13	D12	D11	D10	D9	D8	D7	D6	D5	D4	D3	D2	D1	D0
R-0	R-1	R-0	R-1	R-0	R-1	R-0	R-0	R-0	R-1	R-0	R-0	R-1	R-0	R-0	R-1

LEGEND: R/W = Read/Write; R = Read only; -n = value after reset

Table 23. Manufacturer ID Register Field Descriptions

Bit	Field	Type	Reset	Description
15-0	D15-0	R	5449h	Manufacturer ID bits

8.6.2.20 Die ID Register (address = FFh) [reset = 3220]

This register contains a factory-programmable identification value that identifies this device as an INA3221. This register distinguishes this device from other devices that are on the same I^2C bus. The Die ID for the INA3221 is 3220h.

Figure 51. Die ID Register

15	14	13	12	11	10	9	8	7	6	5	4	3	2	1	0
D15	D14	D13	D12	D11	D10	D9	D8	D7	D6	D5	D4	D3	D2	D1	D0
R-0	R-0	R-1	R-1	R-0	R-0	R-1	R-0	R-0	R-0	R-1	R-0	R-0	R-0	R-0	R-0

LEGEND: R/W = Read/Write; R = Read only; -n = value after reset

Table 24. Die ID Register Field Descriptions

Bit	Field	Type	Reset	Description
15-0	D15-0	R	3220h	Die ID bits

Copyright © 2012–2016, Texas Instruments Incorporated

9 Application and Implementation

NOTE

Information in the following applications sections is not part of the TI component specification, and TI does not warrant its accuracy or completeness. TI's customers are responsible for determining suitability of components for their purposes. Customers should validate and test their design implementation to confirm system functionality.

9.1 Application Information

INA3221 is a three-channel current and bus voltage monitor with I^{2}C/SMBUS-compatible interface. It features programmable conversion times and averaging modes and offers both critical and warning alerts to detect multiple programmable out-of-range conditions for each channel.

9.2 Typical Application

The INA3221 measures the voltage developed across a current-sensing resistor when current passes through it. The device also measures the bus supply voltage at the IN- pin. Multiple monitoring functions are supported using four alert pins: Critical, Warning, PV, and TC. Programmable thresholds make sure operation is within desired operating conditions. This design illustrates the ability of the Critical alert pin to respond to a set threshold.

Figure 52 illustrates a typical INA3221 application circuit using all three channels. For best performance, use a 0.1-µF ceramic capacitor for power-supply bypassing, placed as close as possible to the supply and ground pins. The digital pins (SCL, SDA, Critical, Warning, TC) are connected to supply through pull-up resistors. The power valid (PV) alert pin is connected to the VPU pin through a pull-up resistor to enable power-valid monitoring.

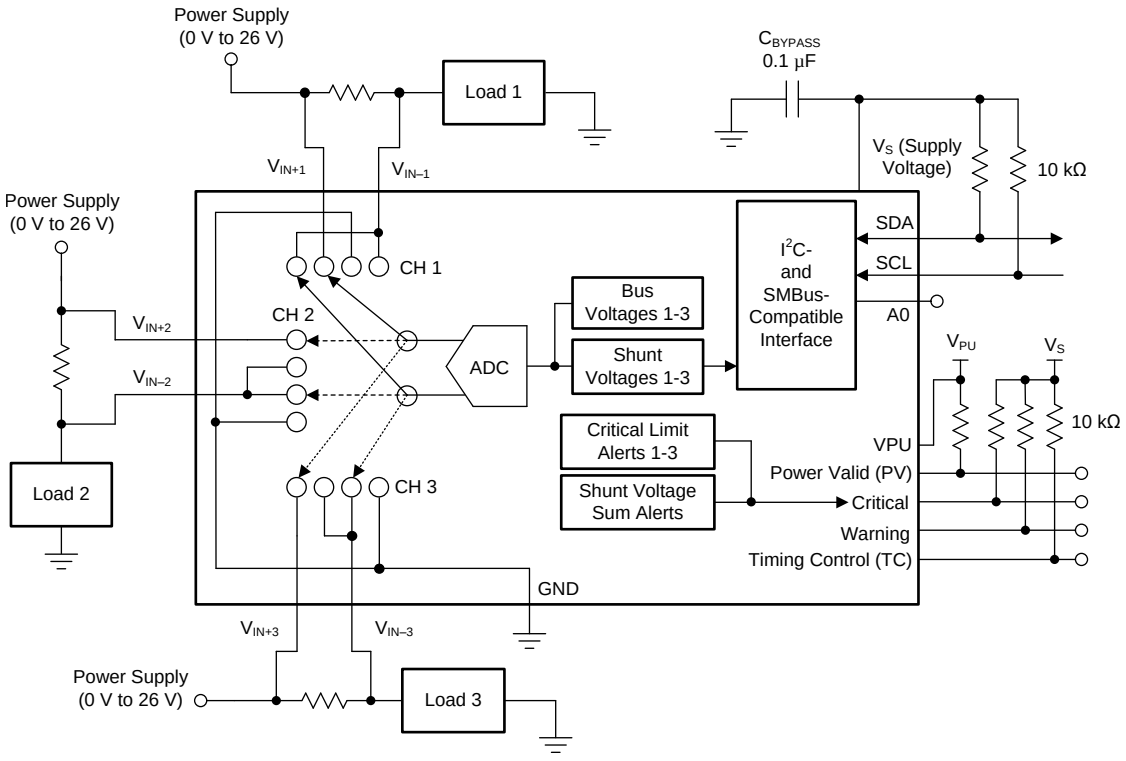

Figure 52. INA3221 as an Overcurrent Sensor

Copyright © 2012–2016, Texas Instruments Incorporated

Typical Application (continued)

9.2.1 Design Requirements

For this design example, use the input parameters shown in Table 25. All other register settings are default.

Table 25. Design Parameters

DESIGN PARAMETER	EXAMPLE VALUE
Supply voltage, V_S	5 V
Pull-up resistors	10 kΩ
Input range	–163.84 to +163.8
Enabled channel	CH1
Operating mode	Shunt voltage, continuous
Average setting	1
Critical alert limit	80 mV
Critical Alert Limit register setting	7D0h

9.2.2 Detailed Design Procedure

This design shows two shunt voltage conversion times in order to demonstrate the difference in the alert response times. This design generates a critical-alert response when the input voltage exceeds 80 mV on channel 1. See Table 25 for all design parameters.

For the first example the shunt voltage conversion time is set to 1.1 ms. When the input signal exceeds 80 mV, the Critical alert pin pulls low after the conversion cycle completes, indicating an overcurrent condition, as shown in Figure 53.

For the second example, the conversion time is set to 588 µs, and the response is shown in Figure 54.

9.2.3 Application Curves

Figure 53 shows the Critical alert pin response to a shunt voltage overlimit of 80 mV for a conversion time of 1.1 ms. Figure 54 shows the response for the same limit, but with the conversion time reduced to 588 µs.

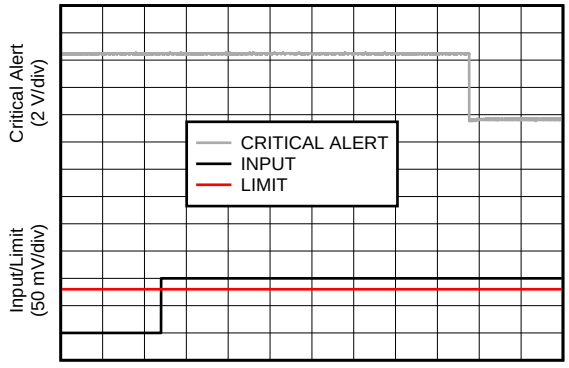

Configuration register = 4125h,
conversion time = 588 µs

Figure 53. Critical Alert Response for 1.1-ms Conversion Time

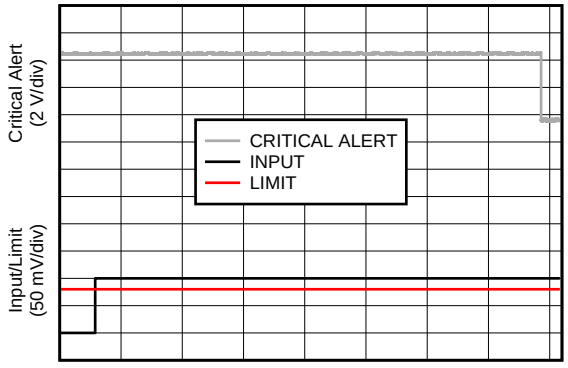

Configuration register = 40DDh,
conversion time = 588 µs

Figure 54. Critical Alert Response for 588-µs Conversion Time

Copyright © 2012–2016, Texas Instruments Incorporated

10 Power Supply Recommendations

The input circuitry of the device can accurately measure signals on common-mode voltages beyond its power supply voltage, V_S. For example, the voltage applied to the V_S power supply terminal can be 5 V, whereas the load power-supply voltage being monitored (the common-mode voltage) on any one of the three channels can be as high as 26 V. Note also that the device can withstand the full 0-V to 26-V range at the input terminals, regardless of whether the device has power applied or not. Place the required power-supply bypass capacitors as close as possible to the supply and ground terminals of the device to ensure stability. A typical value for this supply bypass capacitor is 0.1 µF. Applications with noisy or high-impedance power supplies may require additional decoupling capacitors to reject power-supply noise.

11 Layout

11.1 Layout Guidelines

Connect the input pins (IN+ and IN–) of all the used channels to the sensing resistor using a Kelvin connection or a 4-wire connection. These connection techniques ensure that only the current-sensing resistor impedance is detected between the input pins. Poor routing of the current-sensing resistor commonly results in additional resistance present between the input pins. Given the very low ohmic value of the current-sensing resistor, any additional high-current carrying impedance causes significant measurement errors. Place the power-supply bypass capacitor as close as possible to the supply and ground pins.

11.2 Layout Example

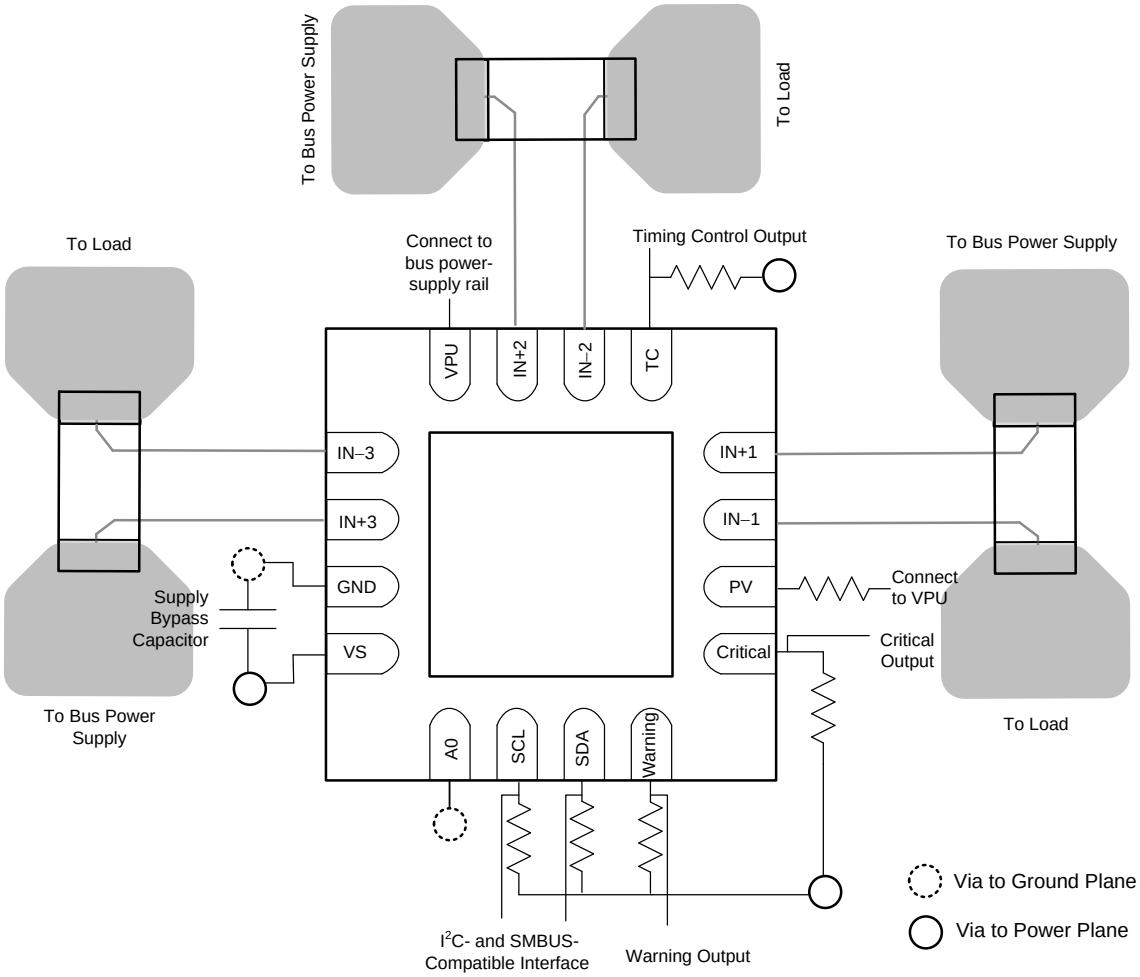

Figure 55. Layout Example

Copyright © 2012–2016, Texas Instruments Incorporated

12 Device and Documentation Support

12.1 Device Support

12.1.1 Development Support

- For INA3221 evaluation module (EVM), go to www.ti.com/tool/INA3221EVM

12.2 Documentation Support

12.2.1 Related Documentation

- INA3221EVM User Guide, SBOU126

12.3 Community Resources

The following links connect to TI community resources. Linked contents are provided "AS IS" by the respective contributors. They do not constitute TI specifications and do not necessarily reflect TI's views; see TI's Terms of Use.

TI E2E™ Online Community ***TI's Engineer-to-Engineer (E2E) Community.*** Created to foster collaboration among engineers. At e2e.ti.com, you can ask questions, share knowledge, explore ideas and help solve problems with fellow engineers.

Design Support ***TI's Design Support*** Quickly find helpful E2E forums along with design support tools and contact information for technical support.

12.4 Trademarks

E2E is a trademark of Texas Instruments.
All other trademarks are the property of their respective owners.

12.5 Electrostatic Discharge Caution

This integrated circuit can be damaged by ESD. Texas Instruments recommends that all integrated circuits be handled with appropriate precautions. Failure to observe proper handling and installation procedures can cause damage.

ESD damage can range from subtle performance degradation to complete device failure. Precision integrated circuits may be more susceptible to damage because very small parametric changes could cause the device not to meet its published specifications.

12.6 Glossary

SLYZ022 — *TI Glossary*.

This glossary lists and explains terms, acronyms, and definitions.

13 Mechanical, Packaging, and Orderable Information

The following pages include mechanical, packaging, and orderable information. This information is the most current data available for the designated devices. This data is subject to change without notice and revision of this document. For browser-based versions of this data sheet, refer to the left-hand navigation.

Copyright © 2012–2016, Texas Instruments Incorporated

PACKAGING INFORMATION

Orderable Device	Status (1)	Package Type	Package Drawing	Pins	Package Qty	Eco Plan (2)	Lead/Ball Finish (6)	MSL Peak Temp (3)	Op Temp (°C)	Device Marking (4/5)	Samples
HPA01113AIRGVR	ACTIVE	VQFN	RGV	16	2500	Green (RoHS & no Sb/Br)	CU NIPDAU	Level-2-260C-1 YEAR	-40 to 125	INA 3221	Samples
INA3221AIRGVR	ACTIVE	VQFN	RGV	16	2500	Green (RoHS & no Sb/Br)	CU NIPDAU	Level-2-260C-1 YEAR	-40 to 125	INA 3221	Samples
INA3221AIRGVT	ACTIVE	VQFN	RGV	16	250	Green (RoHS & no Sb/Br)	CU NIPDAU	Level-2-260C-1 YEAR	-40 to 125	INA 3221	Samples

(1) The marketing status values are defined as follows:
ACTIVE: Product device recommended for new designs.
LIFEBUY: TI has announced that the device will be discontinued, and a lifetime-buy period is in effect.
NRND: Not recommended for new designs. Device is in production to support existing customers, but TI does not recommend using this part in a new design.
PREVIEW: Device has been announced but is not in production. Samples may or may not be available.
OBSOLETE: TI has discontinued the production of the device.

(2) Eco Plan - The planned eco-friendly classification: Pb-Free (RoHS), Pb-Free (RoHS Exempt), or Green (RoHS & no Sb/Br) - please check http://www.ti.com/productcontent for the latest availability information and additional product content details.
TBD: The Pb-Free/Green conversion plan has not been defined.
Pb-Free (RoHS): TI's terms "Lead-Free" or "Pb-Free" mean semiconductor products that are compatible with the current RoHS requirements for all 6 substances, including the requirement that lead not exceed 0.1% by weight in homogeneous materials. Where designed to be soldered at high temperatures, TI Pb-Free products are suitable for use in specified lead-free processes.
Pb-Free (RoHS Exempt): This component has a RoHS exemption for either 1) lead-based flip-chip solder bumps used between the die and package, or 2) lead-based die adhesive used between the die and leadframe. The component is otherwise considered Pb-Free (RoHS compatible) as defined above.
Green (RoHS & no Sb/Br): TI defines "Green" to mean Pb-Free (RoHS compatible), and free of Bromine (Br) and Antimony (Sb) based flame retardants (Br or Sb do not exceed 0.1% by weight in homogeneous material)

(3) MSL, Peak Temp. - The Moisture Sensitivity Level rating according to the JEDEC industry standard classifications, and peak solder temperature.

(4) There may be additional marking, which relates to the logo, the lot trace code information, or the environmental category on the device.

(5) Multiple Device Markings will be inside parentheses. Only one Device Marking contained in parentheses and separated by a "~" will appear on a device. If a line is indented then it is a continuation of the previous line and the two combined represent the entire Device Marking for that device.

(6) Lead/Ball Finish - Orderable Devices may have multiple material finish options. Finish options are separated by a vertical ruled line. Lead/Ball Finish values may wrap to two lines if the finish value exceeds the maximum column width.

Important Information and Disclaimer: The information provided on this page represents TI's knowledge and belief as of the date that it is provided. TI bases its knowledge and belief on information provided by third parties, and makes no representation or warranty as to the accuracy of such information. Efforts are underway to better integrate information from third parties. TI has taken and

continues to take reasonable steps to provide representative and accurate information but may not have conducted destructive testing or chemical analysis on incoming materials and chemicals. TI and TI suppliers consider certain information to be proprietary, and thus CAS numbers and other limited information may not be available for release.

In no event shall TI's liability arising out of such information exceed the total purchase price of the TI part(s) at issue in this document sold by TI to Customer on an annual basis.

OTHER QUALIFIED VERSIONS OF INA3221 :

- Automotive: INA3221-Q1

NOTE: Qualified Version Definitions:

- Automotive - Q100 devices qualified for high-reliability automotive applications targeting zero defects

TAPE AND REEL INFORMATION

REEL DIMENSIONS

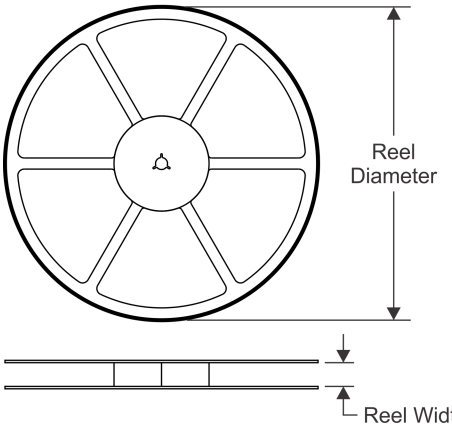

TAPE DIMENSIONS

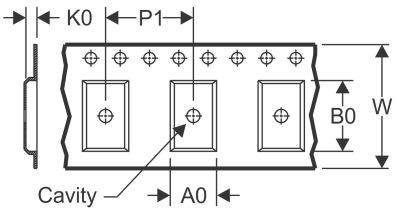

A0	Dimension designed to accommodate the component width
B0	Dimension designed to accommodate the component length
K0	Dimension designed to accommodate the component thickness
W	Overall width of the carrier tape
P1	Pitch between successive cavity centers

QUADRANT ASSIGNMENTS FOR PIN 1 ORIENTATION IN TAPE

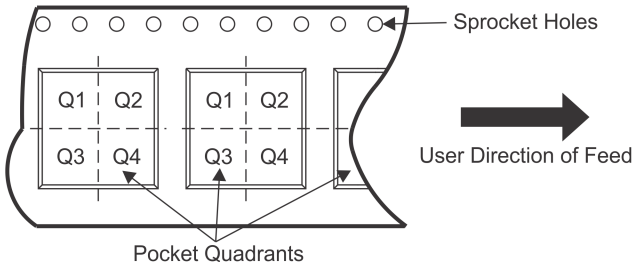

*All dimensions are nominal

Device	Package Type	Package Drawing	Pins	SPQ	Reel Diameter (mm)	Reel Width W1 (mm)	A0 (mm)	B0 (mm)	K0 (mm)	P1 (mm)	W (mm)	Pin1 Quadrant
INA3221AIRGVR	VQFN	RGV	16	2500	330.0	12.4	4.25	4.25	1.15	8.0	12.0	Q2
INA3221AIRGVT	VQFN	RGV	16	250	180.0	12.4	4.25	4.25	1.15	8.0	12.0	Q2

TAPE AND REEL BOX DIMENSIONS

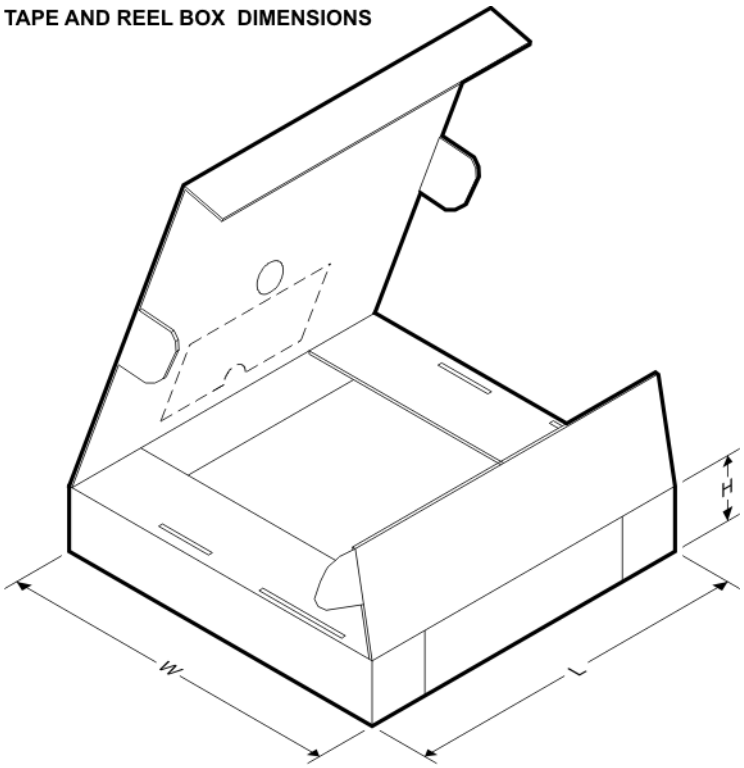

*All dimensions are nominal

Device	Package Type	Package Drawing	Pins	SPQ	Length (mm)	Width (mm)	Height (mm)
INA3221AIRGVR	VQFN	RGV	16	2500	367.0	367.0	35.0
INA3221AIRGVT	VQFN	RGV	16	250	210.0	185.0	35.0

RGV (S–PVQFN–N16) PLASTIC QUAD FLATPACK NO–LEAD

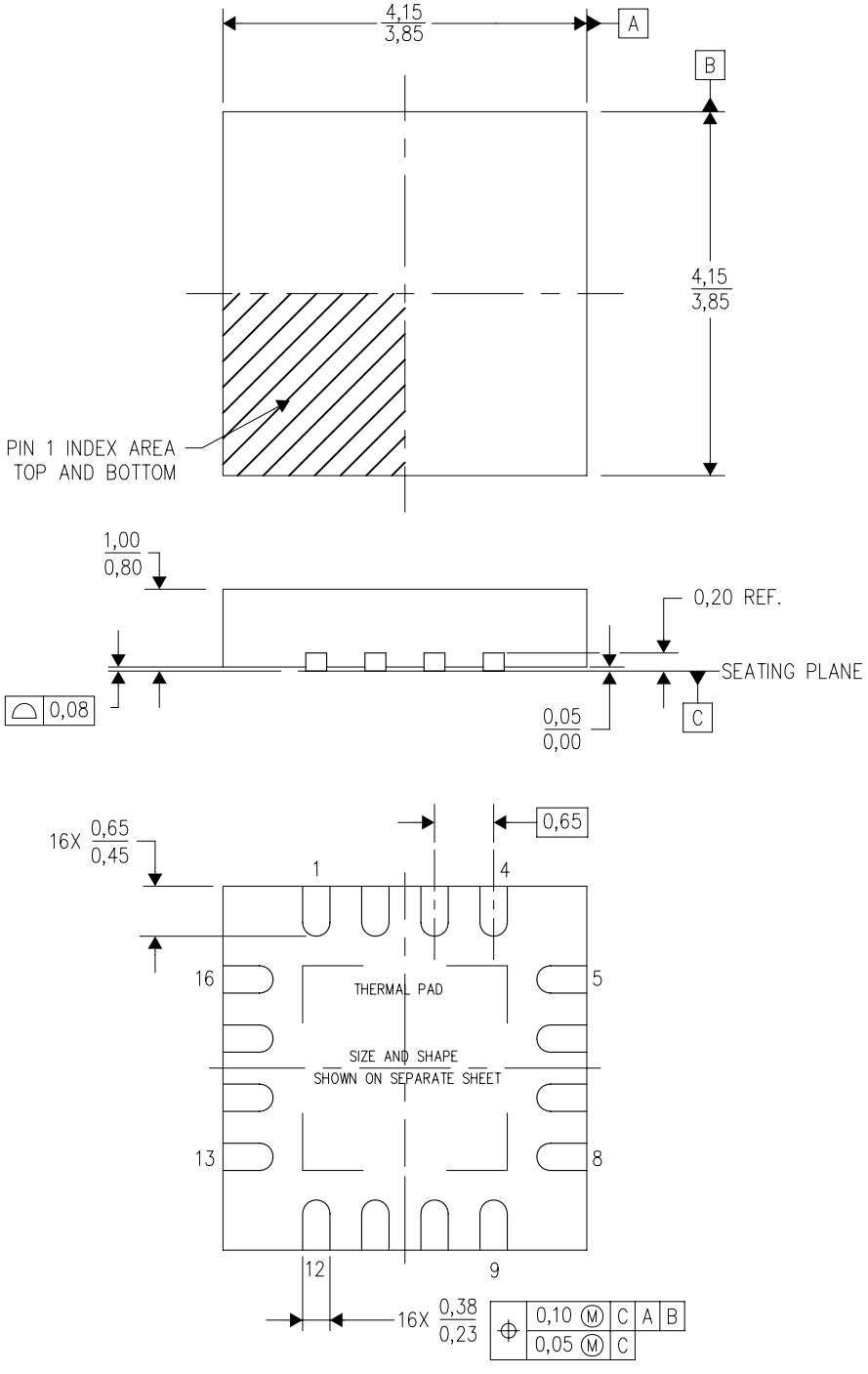

NOTES:
A. All linear dimensions are in millimeters. Dimensioning and tolerancing per ASME Y14.5M–1994.
B. This drawing is subject to change without notice.
C. Quad Flatpack, No–leads (QFN) package configuration.
D. The package thermal pad must be soldered to the board for thermal and mechanical performance.
E. See the additional figure in the Product Data Sheet for details regarding the exposed thermal pad features and dimensions.
F. Falls within JEDEC MO–220.

RGV (S–PVQFN–N16) PLASTIC QUAD FLATPACK NO–LEAD

THERMAL INFORMATION

This package incorporates an exposed thermal pad that is designed to be attached directly to an external heatsink. The thermal pad must be soldered directly to the printed circuit board (PCB). After soldering, the PCB can be used as a heatsink. In addition, through the use of thermal vias, the thermal pad can be attached directly to the appropriate copper plane shown in the electrical schematic for the device, or alternatively, can be attached to a special heatsink structure designed into the PCB. This design optimizes the heat transfer from the integrated circuit (IC).

For information on the Quad Flatpack No–Lead (QFN) package and its advantages, refer to Application Report, QFN/SON PCB Attachment, Texas Instruments Literature No. SLUA271. This document is available at www.ti.com.

The exposed thermal pad dimensions for this package are shown in the following illustration.

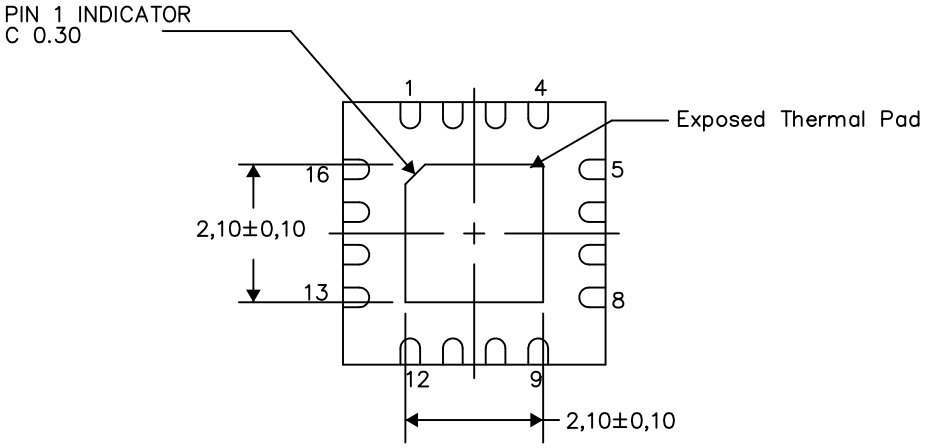

Bottom View

Exposed Thermal Pad Dimensions

4206351–3/L 05/13

NOTE: All linear dimensions are in millimeters

IMPORTANT NOTICE

Texas Instruments Incorporated (TI) reserves the right to make corrections, enhancements, improvements and other changes to its semiconductor products and services per JESD46, latest issue, and to discontinue any product or service per JESD48, latest issue. Buyers should obtain the latest relevant information before placing orders and should verify that such information is current and complete.

TI's published terms of sale for semiconductor products (http://www.ti.com/sc/docs/stdterms.htm) apply to the sale of packaged integrated circuit products that TI has qualified and released to market. Additional terms may apply to the use or sale of other types of TI products and services.

Reproduction of significant portions of TI information in TI data sheets is permissible only if reproduction is without alteration and is accompanied by all associated warranties, conditions, limitations, and notices. TI is not responsible or liable for such reproduced documentation. Information of third parties may be subject to additional restrictions. Resale of TI products or services with statements different from or beyond the parameters stated by TI for that product or service voids all express and any implied warranties for the associated TI product or service and is an unfair and deceptive business practice. TI is not responsible or liable for any such statements.

Buyers and others who are developing systems that incorporate TI products (collectively, "Designers") understand and agree that Designers remain responsible for using their independent analysis, evaluation and judgment in designing their applications and that Designers have full and exclusive responsibility to assure the safety of Designers' applications and compliance of their applications (and of all TI products used in or for Designers' applications) with all applicable regulations, laws and other applicable requirements. Designer represents that, with respect to their applications, Designer has all the necessary expertise to create and implement safeguards that (1) anticipate dangerous consequences of failures, (2) monitor failures and their consequences, and (3) lessen the likelihood of failures that might cause harm and take appropriate actions. Designer agrees that prior to using or distributing any applications that include TI products, Designer will thoroughly test such applications and the functionality of such TI products as used in such applications.

TI's provision of technical, application or other design advice, quality characterization, reliability data or other services or information, including, but not limited to, reference designs and materials relating to evaluation modules, (collectively, "TI Resources") are intended to assist designers who are developing applications that incorporate TI products; by downloading, accessing or using TI Resources in any way, Designer (individually or, if Designer is acting on behalf of a company, Designer's company) agrees to use any particular TI Resource solely for this purpose and subject to the terms of this Notice.

TI's provision of TI Resources does not expand or otherwise alter TI's applicable published warranties or warranty disclaimers for TI products, and no additional obligations or liabilities arise from TI providing such TI Resources. TI reserves the right to make corrections, enhancements, improvements and other changes to its TI Resources. TI has not conducted any testing other than that specifically described in the published documentation for a particular TI Resource.

Designer is authorized to use, copy and modify any individual TI Resource only in connection with the development of applications that include the TI product(s) identified in such TI Resource. NO OTHER LICENSE, EXPRESS OR IMPLIED, BY ESTOPPEL OR OTHERWISE TO ANY OTHER TI INTELLECTUAL PROPERTY RIGHT, AND NO LICENSE TO ANY TECHNOLOGY OR INTELLECTUAL PROPERTY RIGHT OF TI OR ANY THIRD PARTY IS GRANTED HEREIN, including but not limited to any patent right, copyright, mask work right, or other intellectual property right relating to any combination, machine, or process in which TI products or services are used. Information regarding or referencing third-party products or services does not constitute a license to use such products or services, or a warranty or endorsement thereof. Use of TI Resources may require a license from a third party under the patents or other intellectual property of the third party, or a license from TI under the patents or other intellectual property of TI.

TI RESOURCES ARE PROVIDED "AS IS" AND WITH ALL FAULTS. TI DISCLAIMS ALL OTHER WARRANTIES OR REPRESENTATIONS, EXPRESS OR IMPLIED, REGARDING RESOURCES OR USE THEREOF, INCLUDING BUT NOT LIMITED TO ACCURACY OR COMPLETENESS, TITLE, ANY EPIDEMIC FAILURE WARRANTY AND ANY IMPLIED WARRANTIES OF MERCHANTABILITY, FITNESS FOR A PARTICULAR PURPOSE, AND NON-INFRINGEMENT OF ANY THIRD PARTY INTELLECTUAL PROPERTY RIGHTS. TI SHALL NOT BE LIABLE FOR AND SHALL NOT DEFEND OR INDEMNIFY DESIGNER AGAINST ANY CLAIM, INCLUDING BUT NOT LIMITED TO ANY INFRINGEMENT CLAIM THAT RELATES TO OR IS BASED ON ANY COMBINATION OF PRODUCTS EVEN IF DESCRIBED IN TI RESOURCES OR OTHERWISE. IN NO EVENT SHALL TI BE LIABLE FOR ANY ACTUAL, DIRECT, SPECIAL, COLLATERAL, INDIRECT, PUNITIVE, INCIDENTAL, CONSEQUENTIAL OR EXEMPLARY DAMAGES IN CONNECTION WITH OR ARISING OUT OF TI RESOURCES OR USE THEREOF, AND REGARDLESS OF WHETHER TI HAS BEEN ADVISED OF THE POSSIBILITY OF SUCH DAMAGES.

Unless TI has explicitly designated an individual product as meeting the requirements of a particular industry standard (e.g., ISO/TS 16949 and ISO 26262), TI is not responsible for any failure to meet such industry standard requirements.

Where TI specifically promotes products as facilitating functional safety or as compliant with industry functional safety standards, such products are intended to help enable customers to design and create their own applications that meet applicable functional safety standards and requirements. Using products in an application does not by itself establish any safety features in the application. Designers must ensure compliance with safety-related requirements and standards applicable to their applications. Designer may not use any TI products in life-critical medical equipment unless authorized officers of the parties have executed a special contract specifically governing such use. Life-critical medical equipment is medical equipment where failure of such equipment would cause serious bodily injury or death (e.g., life support, pacemakers, defibrillators, heart pumps, neurostimulators, and implantables). Such equipment includes, without limitation, all medical devices identified by the U.S. Food and Drug Administration as Class III devices and equivalent classifications outside the U.S.

TI may expressly designate certain products as completing a particular qualification (e.g., Q100, Military Grade, or Enhanced Product). Designers agree that it has the necessary expertise to select the product with the appropriate qualification designation for their applications and that proper product selection is at Designers' own risk. Designers are solely responsible for compliance with all legal and regulatory requirements in connection with such selection.

Designer will fully indemnify TI and its representatives against any damages, costs, losses, and/or liabilities arising out of Designer's non-compliance with the terms and provisions of this Notice.

Mailing Address: Texas Instruments, Post Office Box 655303, Dallas, Texas 75265
Copyright © 2017, Texas Instruments Incorporated