

SBOS193D – MARCH 2001 – REVISED JANUARY 2006

High-Side, Bidirectional CURRENT SHUNT MONITOR

FEATURES

- COMPLETE BIDIRECTIONAL CURRENT MEASUREMENT CIRCUIT
- WIDE SUPPLY RANGE: 2.7V to 40V
- SUPPLY-INDEPENDENT COMMON-MODE VOLTAGE: 2.7V TO 60V
- RESISTOR PROGRAMMABLE GAIN SET
- LOW QUIESCENT CURRENT: 75μA (typ)
- MSOP-8 PACKAGE

APPLICATIONS

- CURRENT SHUNT MEASUREMENT: Automotive, Telephone, Computers, Power Systems, Test, General Instrumentation
- PORTABLE AND BATTERY-BACKUP SYSTEMS
- BATTERY CHARGERS
- POWER MANAGEMENT
- CELL PHONES

DESCRIPTION

The INA170 is a high-side, bidirectional current shunt monitor featuring a wide input common-mode voltage range, low quiescent current, and a tiny MSOP-8 package.

Bidirectional current measurement is accomplished by output offsetting. The offset voltage level is set with an external resistor and voltage reference. This permits measurement of a bidirectional shunt current while using a single supply for the INA170.

Input common-mode and power-supply voltages are independent. Input voltage can range from +2.7V to +60V on any supply voltage from +2.7V to +40V. Low 10μA input bias current adds minimal error to the shunt current.

The INA170 converts a differential input voltage to a current output. This current develops a voltage across an external load resistor, setting any gain from 1 to over 100.

The INA170 is available in an MSOP-8 package, and is specified over the extended industrial temperature range, –40°C to +85°C with operation from –55°C to +125°C.

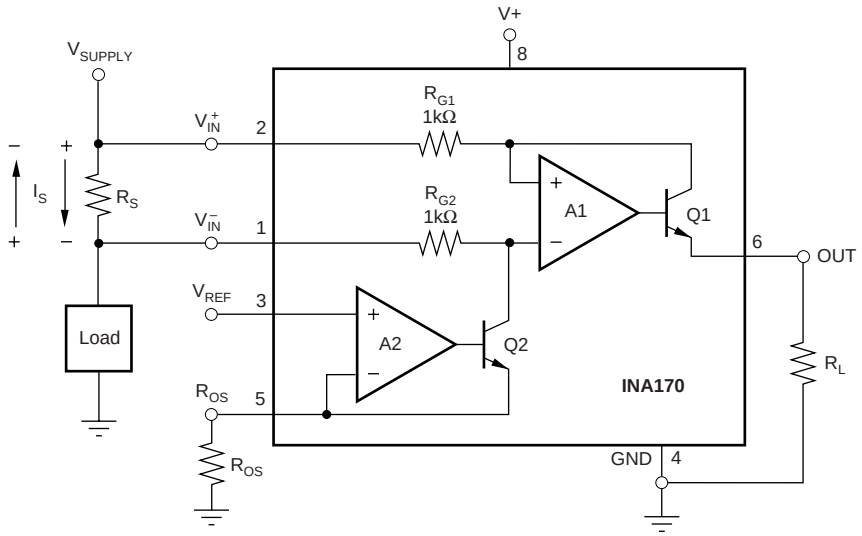

Please be aware that an important notice concerning availability, standard warranty, and use in critical applications of Texas Instruments semiconductor products and disclaimers thereto appears at the end of this data sheet.

All trademarks are the property of their respective owners.

PRODUCTION DATA information is current as of publication date. Products conform to specifications per the terms of Texas Instruments standard warranty. Production processing does not necessarily include testing of all parameters.

Copyright © 2001-2006, Texas Instruments Incorporated

ABSOLUTE MAXIMUM RATINGS(1)

Supply Voltage, V+ to GND	–0.3V to 40V
Analog Inputs, Common Mode(2)	–0.3V to 75V
Differential (V_{IN}^+) – (V_{IN}^-)	–40V to 2V
Analog Output, Out(2)	–0.3V to 40V
Input Current Into Any Pin	10mA
Operating Temperature	–55°C to +125°C
Storage Temperature	–65°C to +150°C
Junction Temperature	+150°C

NOTE: (1) Stresses above these ratings may cause permanent damage. Exposure to absolute maximum conditions for extended periods may degrade device reliability. These are stress ratings only, and functional operation of the device at these or any other conditions beyond those specified is not implied. (2) The input voltage at any pin may exceed the voltage shown if the current at that pin is limited to 10mA.

ELECTROSTATIC DISCHARGE SENSITIVITY

This integrated circuit can be damaged by ESD. Texas Instruments recommends that all integrated circuits be handled with appropriate precautions. Failure to observe proper handling and installation procedures can cause damage.

ESD damage can range from subtle performance degradation to complete device failure. Precision integrated circuits may be more susceptible to damage because very small parametric changes could cause the device not to meet its published specifications.

PACKAGE/ORDERING INFORMATION(1)

PRODUCT	PACKAGE-LEAD	PACKAGE DESIGNATOR	SPECIFIED TEMPERATURE RANGE	PACKAGE MARKING	ORDERING NUMBER	TRANSPORT MEDIA, QUANTITY
INA170EA	MSOP-8	DGK	–40°C to +85°C	INA170EA	INA170EA/250	Tape and Reel, 250
"	"	"	"	"	INA170EA/2K5	Tape and Reel, 2500

NOTE: (1) For the most current package and ordering information, see the Package Option Addendum at the end of this document, or see the TI website at www.ti.com.

PIN CONFIGURATION

TOP VIEW MSOP

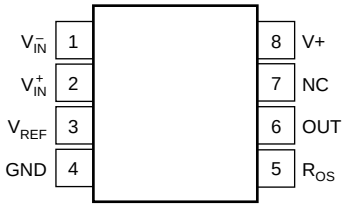

PIN DESCRIPTION

PIN	DESIGNATOR	DESCRIPTION
1	V_{IN}^-	Inverting Input
2	V_{IN}^+	Noninverting Input
3	V_{REF}	Reference Voltage Input
4	GND	Ground
5	R_{OS}	Offset Resistor
6	OUT	Output
7	NC	No Connection
8	V+	Supply Voltage

ELECTRICAL CHARACTERISTICS

At T_A = –40°C to +85°C, V_S = 5V, V_{IN}^+ = 12V, R_{OUT} = 25kΩ, unless otherwise noted.

PARAMETER	CONDITION	INA170EA MIN	INA170EA TYP	INA170EA MAX	UNITS
INPUT					
Full-Scale Sense (Input) Voltage	$V_{SENSE} = V_{IN}^+ - V_{IN}^-$		100	500	mV
Common-Mode Input Range		+2.7		+60	V
Common-Mode Rejection	V_{IN}^+ = +2.7V to +60V, V_{SENSE} = 50mV	100	120		dB
Offset Voltage(1) RTI			±0.2	±1	mV
vs Temperature	T_{MIN} to T_{MAX}		1		µV/°C
vs Power Supply	V+ = +2.7V to +60V, V_{SENSE} = 50mV		0.1	10	µV/V
Input Bias Current	V_{IN}^+, V_{IN}^-		10		uA
OFFSETTING AMPLIFIER					
Offsetting Equation	$V_{OS} = (R_L/R_{OS})\ V_{REF}$				
Input Voltage		1		V_S – 1	V
Input Offset Voltage			±0.2	±1	mV
vs Temperature	T_{MIN} to T_{MAX}		10		µV/°C
Programming Current through R_{OS}		0		1	mA
Input Impedance			10^{10} || 4		Ω || pF
Input Bias Current	V_{IN}^+, V_{IN}^-		+10		nA
OUTPUT					
Transconductance	V_{SENSE} = 10mV to 150mV	0.990	1	1.01	mA/V
vs Temperature	V_{SENSE} = 100mV		50		nA/°C
Nonlinearity Error	V_{SENSE} = 10mV to 150mV		±0.01	±0.1	%
Total Output Error	V_{SENSE} = 100mV		±0.5	±2	%
Output Impedance			1 || 5		GΩ || pF
Voltage Output					
Swing to Power Supply, V+			(V+) – 0.9	(V+) – 1.2	V
Swing to Common Mode, V_{CM}			V_{CM} – 0.6	V_{CM} – 1.0	V
FREQUENCY RESPONSE					
Bandwidth	R_{OUT} = 10kΩ		400		kHz
Settling Time (0.1%)	5V Step, R_{OUT} = 10kΩ		3		µs
NOISE					
Output-Current Noise Density			20		pA/√Hz
Total Output-Current Noise	BW = 100kHz		7		nA RMS
POWER SUPPLY					
Operating Range	V+	+2.7		+40	V
Quiescent Current	V_{SENSE} = 0, I_O = 0		75	125	µA
TEMPERATURE RANGE					
Specification, T_{MIN} to T_{MAX}		–40		+85	°C
Operating		–55		+125	°C
Storage		–65		+150	°C
Thermal Resistance, θ_{JA}			150		°C/W

NOTE: (1) Defined as the amount of input voltage, V_{SENSE}, to drive the output to zero.

TYPICAL CHARACTERISTICS

At T_A = +25°C, V+ = 5V, V_{IN}^+ = 12V, R_L = 25kΩ, unless otherwise noted.

GAIN vs FREQUENCY

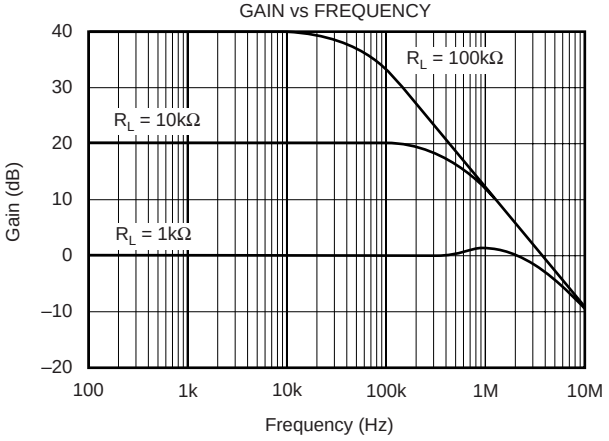

COMMON-MODE REJECTION vs FREQUENCY

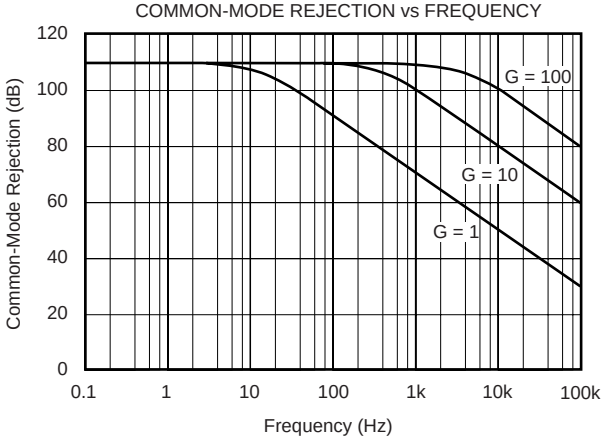

POWER-SUPPLY REJECTION vs FREQUENCY

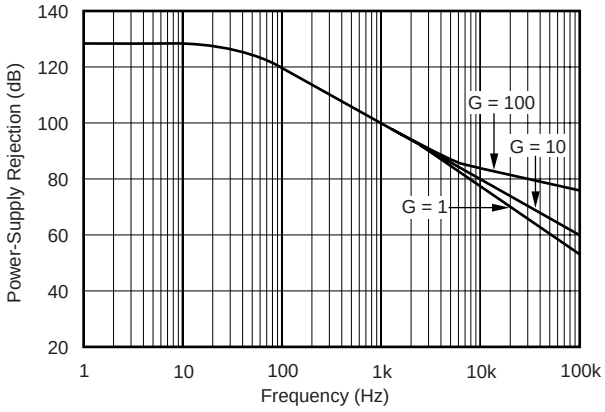

TOTAL OUTPUT ERROR vs V_{IN}

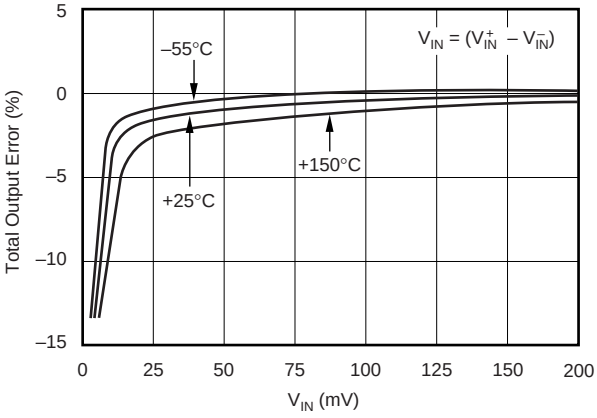

TOTAL OUTPUT ERROR
vs POWER-SUPPLY VOLTAGE

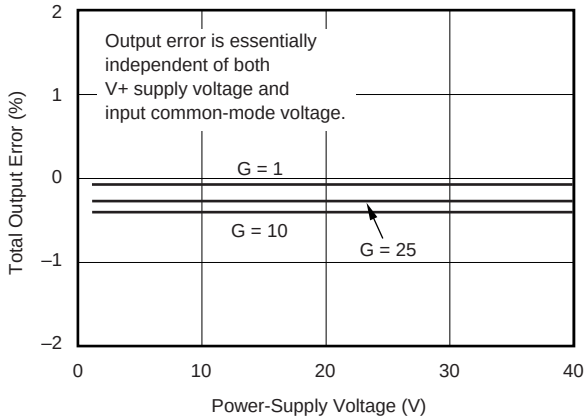

QUIESCENT CURRENT
vs POWER-SUPPLY VOLTAGE

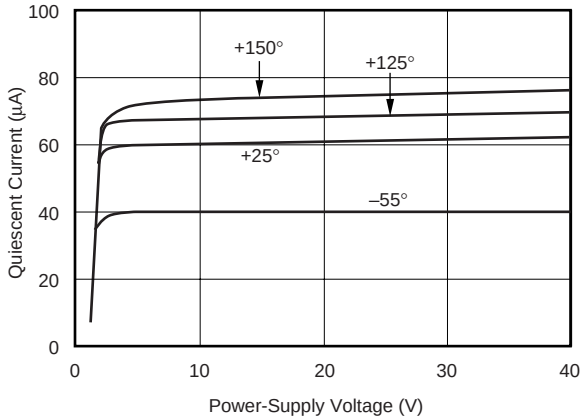

TYPICAL CHARACTERISTICS (Cont.)

At T_A = +25°C, V+ = 5V, V_{IN}^+ = 12V, R_L = 25kΩ, unless otherwise noted.

STEP RESPONSE

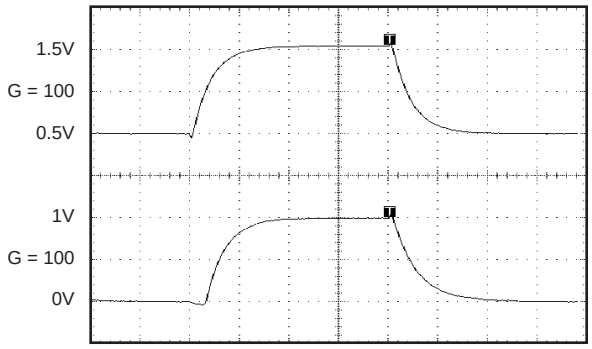

20µs/div

STEP RESPONSE

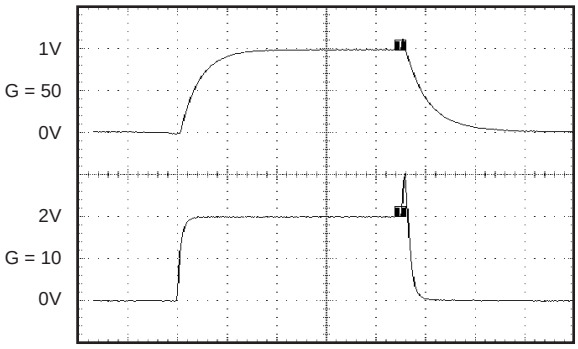

10µs/div

OPERATION

Figure 1 shows the basic circuit diagram for the INA170. Load current I_S is drawn from supply V_S through shunt resistor R_S. The voltage drop in shunt resistor V_S is forced across R_{G1} by the internal op-amp, causing current to flow into the collector of Q1. External resistor R_L converts the output current to a voltage, V_{OUT}, at the OUT pin.

Without offset, the transfer function for the INA170 is:

$$I_O = g_m\ (V_{IN}^+ - V_{IN}^-) \quad (1)$$

$$\text{where } g_m = 1000\mu A/V \quad (2)$$

In the circuit of Figure 1, the input voltage, $(V_{IN}^+ - V_{IN}^-)$, is equal to $I_S \bullet R_S$ and the output voltage, V_{OUT}, is equal to $I_O \bullet R_L$. The transconductance, g_m, of the INA170 is 1000µA/V. The complete transfer function for the current measurement amplifier in this application is:

$$V_{OUT} = (I_S)\ (R_S)\ (1000\mu A/V)\ (R_L) \quad (3)$$

Applying a positive reference voltage to pin 3 causes a current to flow through R_{OS}, forcing output current I_O to be offset from zero. The transfer function then becomes:

$$V_{OUT} = \left(\frac{V_{REF} \bullet R_L}{R_{OS}}\right) \pm \left(\frac{I_S \bullet R_S \bullet R_L}{1k\Omega}\right) \quad (4)$$

The maximum differential input voltage for accurate measurements is 0.5V, which produces a 500µA output current. A differential input voltage of up to 2V will not cause damage. Differential measurements (pins 1 and 2) can be bipolar with a more-positive voltage applied to pin 2. If a more-negative voltage is applied to pin 1, output current I_O will decrease towards zero.

BASIC CONNECTION

Figure 1 shows the basic connection of the INA170. The input pins, V_{IN}^+ and V_{IN}^-, should be connected as closely as possible to the shunt resistor to minimize any resistance in series with the shunt resistance. The output resistor, R_L, is shown connected between pin 6 and ground. Best accuracy is achieved with the output voltage measured directly across R_L. This is especially important in high-current systems where load current could flow in the ground connections, affecting the measurement accuracy.

No power-supply bypass capacitors are required for stability of the INA170. However, applications with noisy or high impedance power supplies may require de-coupling capacitors to reject power-supply noise. Connect bypass capacitors close to the device pins.

POWER SUPPLIES

The input circuitry of the INA170 can accurately measure beyond its power-supply voltage, V+. For example, the V+ power supply can be 5V, while the load power-supply voltage (INA170 input voltage) is up to +60V. However, the output-voltage range of the OUT terminal (pin 6) is limited by the supply.

SELECTING R_S AND R_L

The value chosen for the shunt resistor, R_S, depends on the application and is a compromise between small-signal accuracy and maximum permissible voltage loss in the measurement line. High values of R_S provide better accuracy at lower

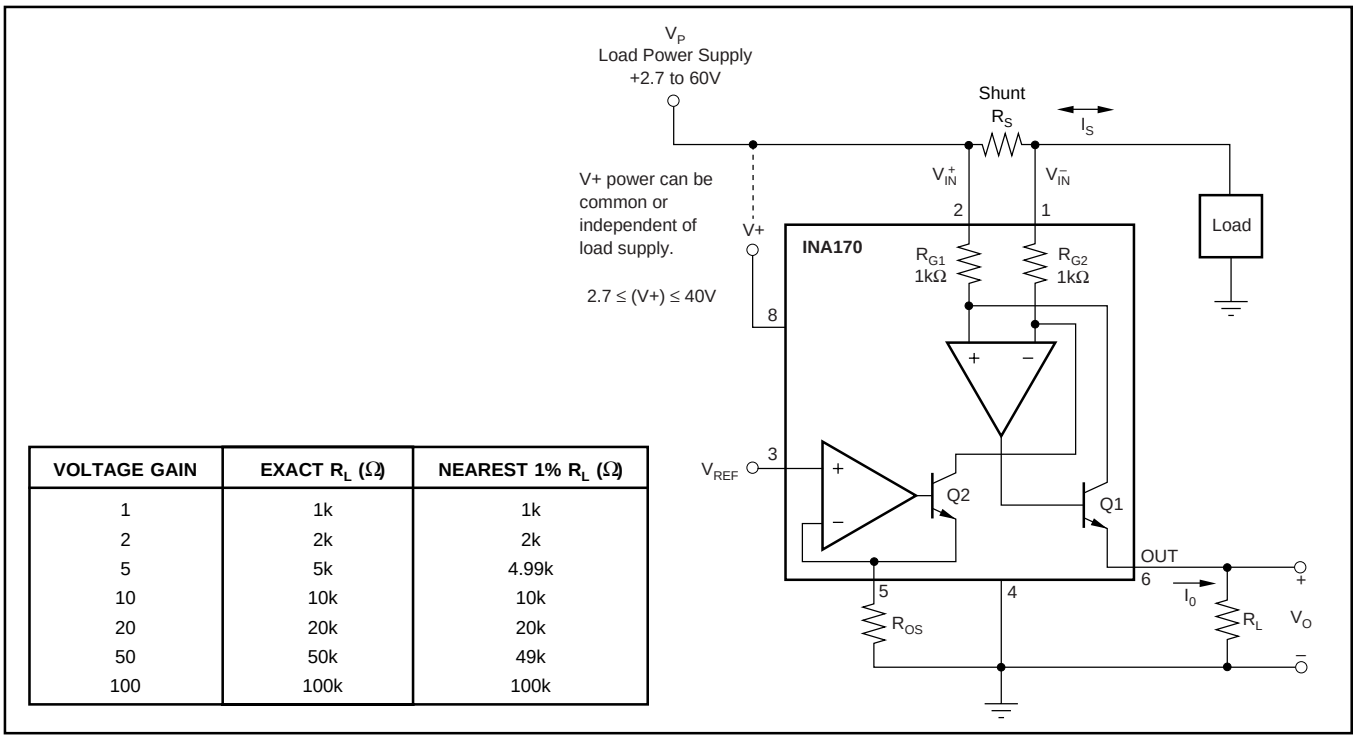

VOLTAGE GAIN	EXACT R_L (Ω)	NEAREST 1% R_L (Ω)
1	1k	1k
2	2k	2k
5	5k	4.99k
10	10k	10k
20	20k	20k
50	50k	49k
100	100k	100k

FIGURE 1. Basic Circuit Connections.

currents by minimizing the effects of offset, while low values of R_S minimize voltage loss in the supply line. For most applications, best performance is attained with an R_S value that provides a full-scale shunt voltage of 50mV to 100mV. Maximum input voltage for accurate measurements is 500mV.

R_L is chosen to provide the desired full-scale output voltage. The output impedance of the INA170 Out terminal is very high which permits using values of R_L up to 100kΩ with excellent accuracy. The input impedance of any additional circuitry at the output should be much higher than the value of R_L to avoid degrading accuracy.

Some Analog-to-Digital (A/D) converters have input impedances that will significantly affect measurement gain. The input impedance of the A/D converter can be included as part of the effective R_L if its input can be modeled as a resistor to ground. Alternatively, an op-amp can be used to buffer the A/D converter input, as shown in Figure 2. See Figure 1 for recommended values of R_L.

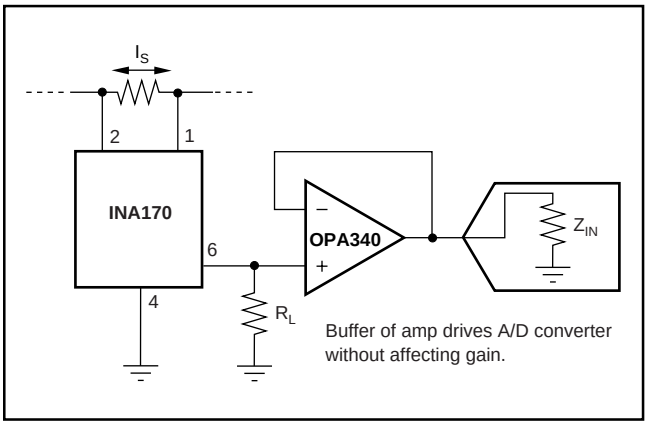

FIGURE 2. Buffering Output to Drive A/D Converter.

OUTPUT VOLTAGE RANGE

The output of the INA170 is a current, which is converted to a voltage by the load resistor, R_L. The output current remains accurate within the *compliance voltage range* of the output circuitry. The shunt voltage and the input common-mode and power supply voltages limit the maximum possible output swing. The maximum output voltage compliance is limited by the lower of the two equations below:

$$V_{out\ max} = (V+) - 0.7V - (V_{IN}^{+} - V_{IN}^{-}) \quad (5)$$

or

$$V_{out\ max} = V_{IN}^{-} - 0.5V \quad (6)$$

(whichever is lower)

BANDWIDTH

Measurement bandwidth is affected by the value of the load resistor, R_L. High gain produced by high values of R_L will yield a narrower measurement bandwidth (see Typical Characteristic Curves). For widest possible bandwidth, keep the capacitive load on the output to a minimum.

If bandwidth limiting (filtering) is desired, a capacitor can be added to the output, as shown in Figure 3. This will not cause instability.

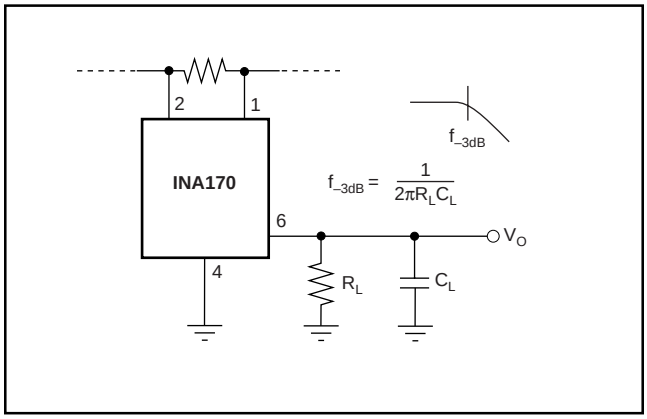

FIGURE 3. Output Filter.

APPLICATIONS

The INA170 is designed for current shunt measurement circuits as shown in Figure 1, but its basic function is useful in a wide range of circuitry. A creative engineer will find many unforeseen uses in measurement and level shifting circuits.

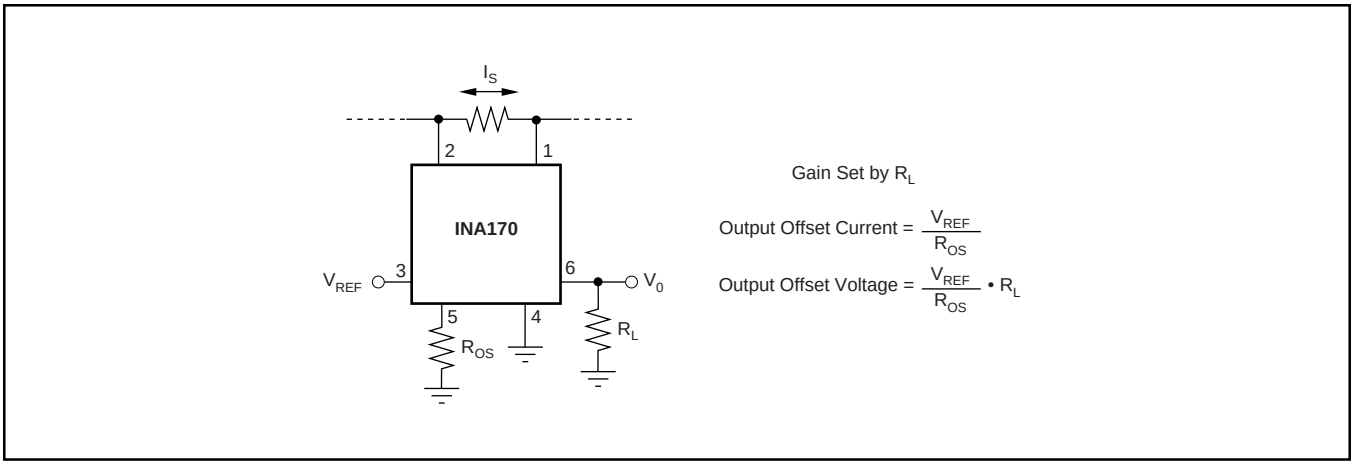

FIGURE 4. Offsetting the Output Voltage.

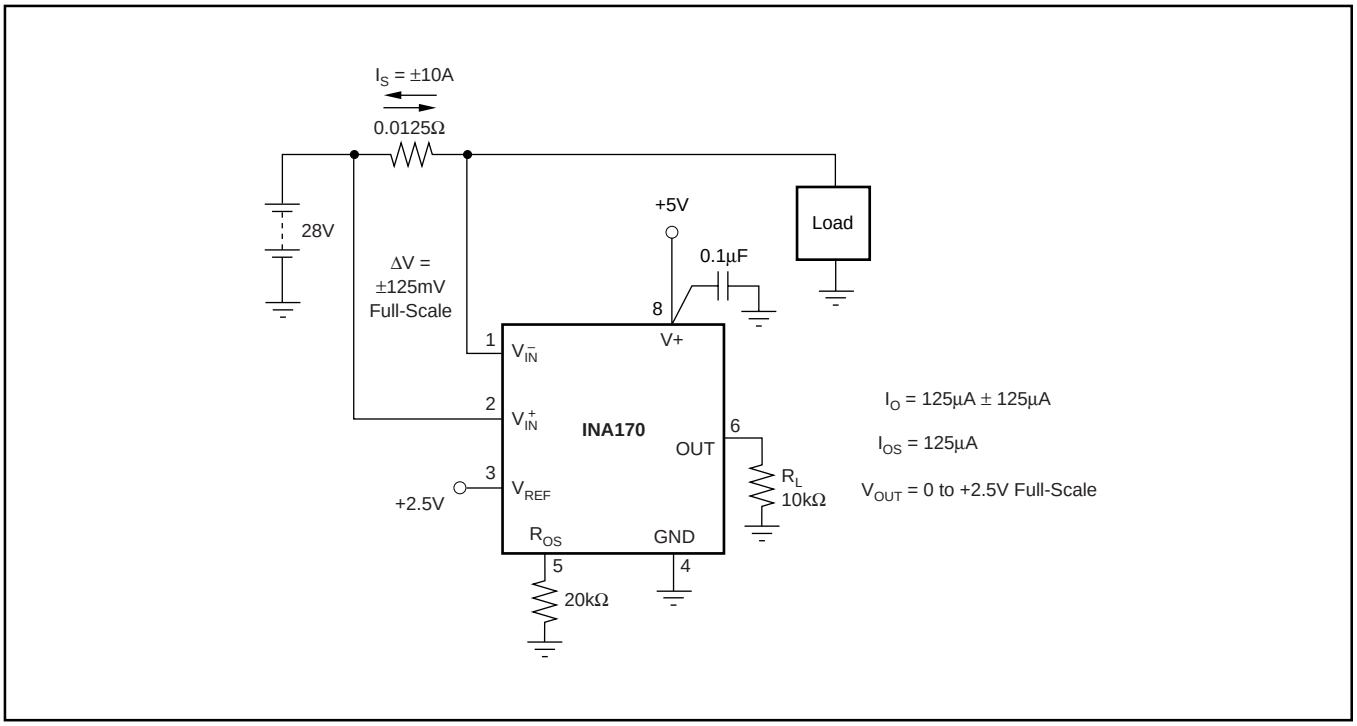

FIGURE 5. Bipolar Current Measurement.

PACKAGING INFORMATION

Orderable Device	Status (1)	Package Type	Package Drawing	Pins	Package Qty	Eco Plan (2)	Lead/Ball Finish (6)	MSL Peak Temp (3)	Op Temp (°C)	Device Marking (4/5)	Samples
INA170EA/250	ACTIVE	VSSOP	DGK	8	250	Green (RoHS & no Sb/Br)	CU NIPDAUAG	Level-2-260C-1 YEAR	-40 to 85	A70	Samples
INA170EA/250G4	ACTIVE	VSSOP	DGK	8	250	Green (RoHS & no Sb/Br)	CU NIPDAUAG	Level-2-260C-1 YEAR	-40 to 85	A70	Samples
INA170EA/2K5	ACTIVE	VSSOP	DGK	8	2500	Green (RoHS & no Sb/Br)	CU NIPDAUAG	Level-2-260C-1 YEAR	-40 to 85	A70	Samples

(1) The marketing status values are defined as follows:
ACTIVE: Product device recommended for new designs.
LIFEBUY: TI has announced that the device will be discontinued, and a lifetime-buy period is in effect.
NRND: Not recommended for new designs. Device is in production to support existing customers, but TI does not recommend using this part in a new design.
PREVIEW: Device has been announced but is not in production. Samples may or may not be available.
OBSOLETE: TI has discontinued the production of the device.

(2) Eco Plan - The planned eco-friendly classification: Pb-Free (RoHS), Pb-Free (RoHS Exempt), or Green (RoHS & no Sb/Br) - please check http://www.ti.com/productcontent for the latest availability information and additional product content details.
TBD: The Pb-Free/Green conversion plan has not been defined.
Pb-Free (RoHS): TI's terms "Lead-Free" or "Pb-Free" mean semiconductor products that are compatible with the current RoHS requirements for all 6 substances, including the requirement that lead not exceed 0.1% by weight in homogeneous materials. Where designed to be soldered at high temperatures, TI Pb-Free products are suitable for use in specified lead-free processes.
Pb-Free (RoHS Exempt): This component has a RoHS exemption for either 1) lead-based flip-chip solder bumps used between the die and package, or 2) lead-based die adhesive used between the die and leadframe. The component is otherwise considered Pb-Free (RoHS compatible) as defined above.
Green (RoHS & no Sb/Br): TI defines "Green" to mean Pb-Free (RoHS compatible), and free of Bromine (Br) and Antimony (Sb) based flame retardants (Br or Sb do not exceed 0.1% by weight in homogeneous material)

(3) MSL, Peak Temp. - The Moisture Sensitivity Level rating according to the JEDEC industry standard classifications, and peak solder temperature.

(4) There may be additional marking, which relates to the logo, the lot trace code information, or the environmental category on the device.

(5) Multiple Device Markings will be inside parentheses. Only one Device Marking contained in parentheses and separated by a "~" will appear on a device. If a line is indented then it is a continuation of the previous line and the two combined represent the entire Device Marking for that device.

(6) Lead/Ball Finish - Orderable Devices may have multiple material finish options. Finish options are separated by a vertical ruled line. Lead/Ball Finish values may wrap to two lines if the finish value exceeds the maximum column width.

Important Information and Disclaimer: The information provided on this page represents TI's knowledge and belief as of the date that it is provided. TI bases its knowledge and belief on information provided by third parties, and makes no representation or warranty as to the accuracy of such information. Efforts are underway to better integrate information from third parties. TI has taken and

continues to take reasonable steps to provide representative and accurate information but may not have conducted destructive testing or chemical analysis on incoming materials and chemicals.
TI and TI suppliers consider certain information to be proprietary, and thus CAS numbers and other limited information may not be available for release.

In no event shall TI's liability arising out of such information exceed the total purchase price of the TI part(s) at issue in this document sold by TI to Customer on an annual basis.

TAPE AND REEL INFORMATION

REEL DIMENSIONS

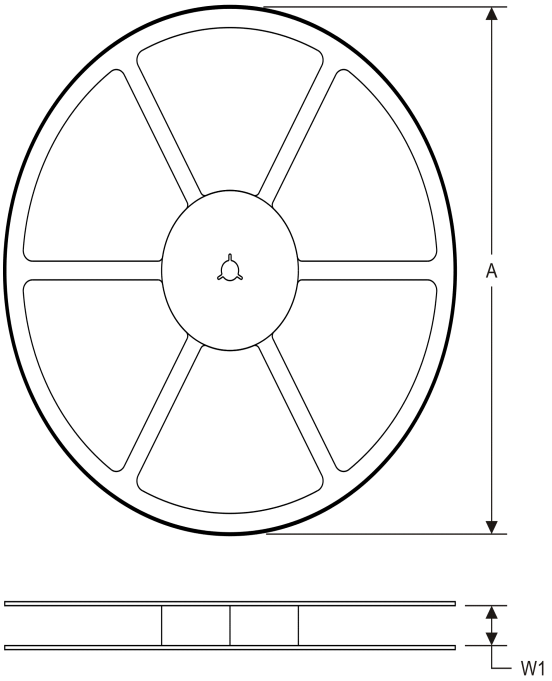

TAPE DIMENSIONS

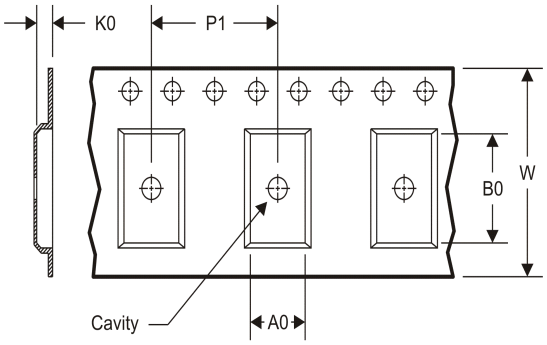

A0	Dimension designed to accommodate the component width
B0	Dimension designed to accommodate the component length
K0	Dimension designed to accommodate the component thickness
W	Overall width of the carrier tape
P1	Pitch between successive cavity centers

TAPE AND REEL INFORMATION

*All dimensions are nominal

Device	Package Type	Package Drawing	Pins	SPQ	Reel Diameter (mm)	Reel Width W1 (mm)	A0 (mm)	B0 (mm)	K0 (mm)	P1 (mm)	W (mm)	Pin1 Quadrant
INA170EA/250	VSSOP	DGK	8	250	330.0	12.4	5.3	3.4	1.4	8.0	12.0	Q1
INA170EA/2K5	VSSOP	DGK	8	2500	330.0	12.4	5.3	3.4	1.4	8.0	12.0	Q1

TAPE AND REEL BOX DIMENSIONS

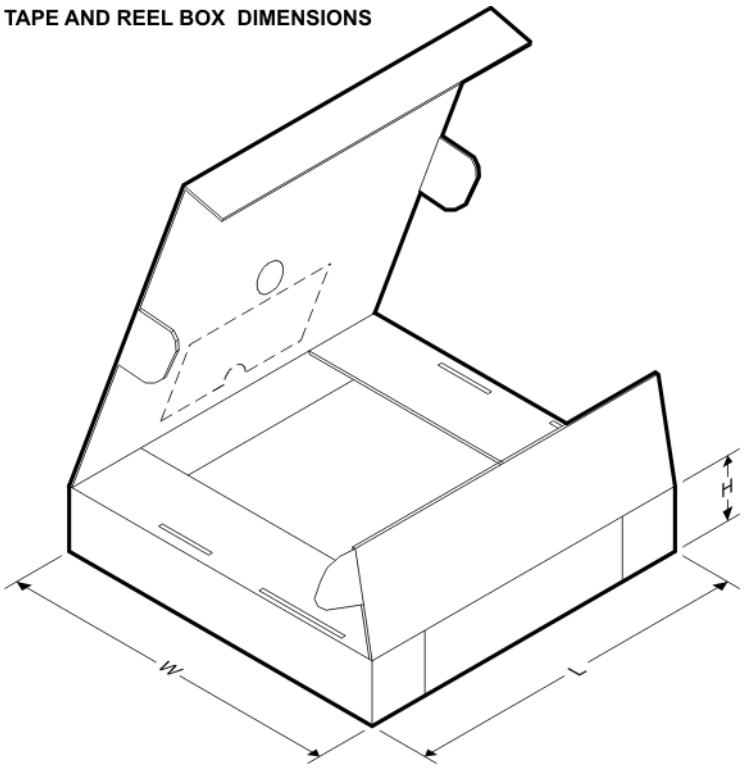

*All dimensions are nominal

Device	Package Type	Package Drawing	Pins	SPQ	Length (mm)	Width (mm)	Height (mm)
INA170EA/250	VSSOP	DGK	8	250	366.0	364.0	50.0
INA170EA/2K5	VSSOP	DGK	8	2500	366.0	364.0	50.0

DGK (S–PDSO–G8) PLASTIC SMALL–OUTLINE PACKAGE

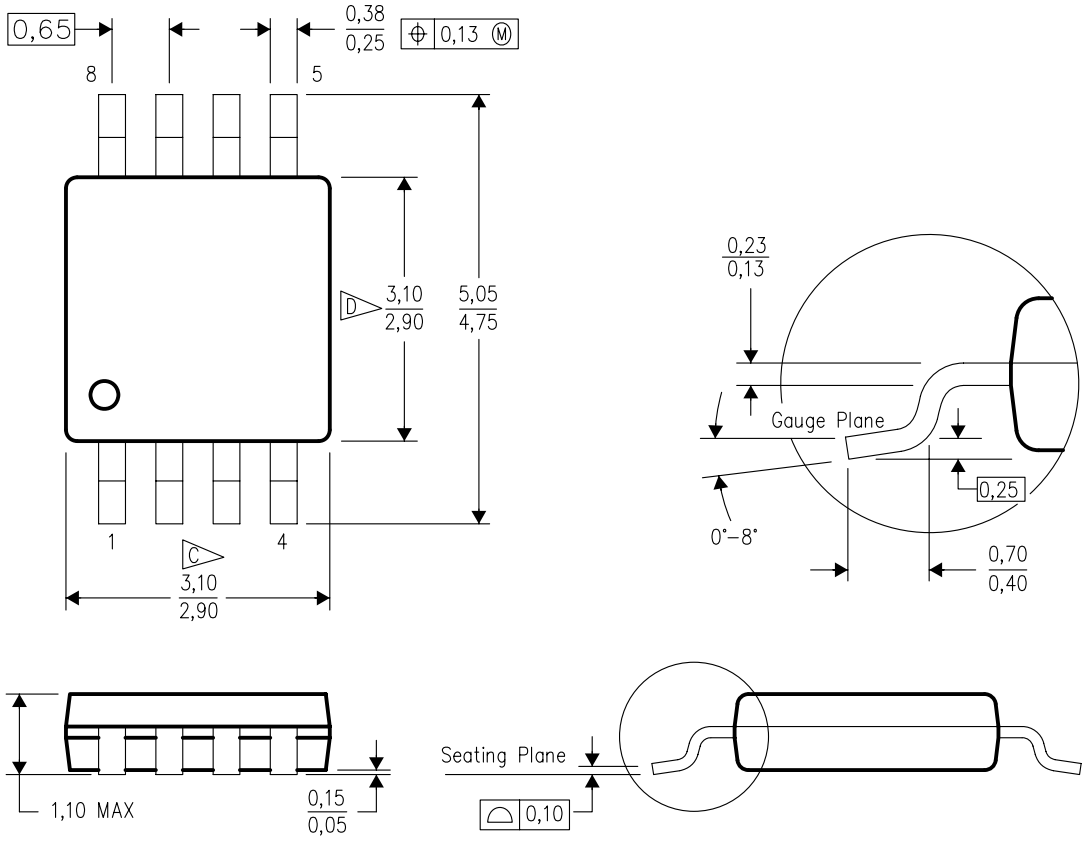

4073329/E 05/06

NOTES:
A. All linear dimensions are in millimeters.
B. This drawing is subject to change without notice.
C. Body length does not include mold flash, protrusions, or gate burrs. Mold flash, protrusions, or gate burrs shall not exceed 0.15 per end.
D. Body width does not include interlead flash. Interlead flash shall not exceed 0.50 per side.
E. Falls within JEDEC MO–187 variation AA, except interlead flash.

DGK (S–PDSO–G8) PLASTIC SMALL OUTLINE PACKAGE

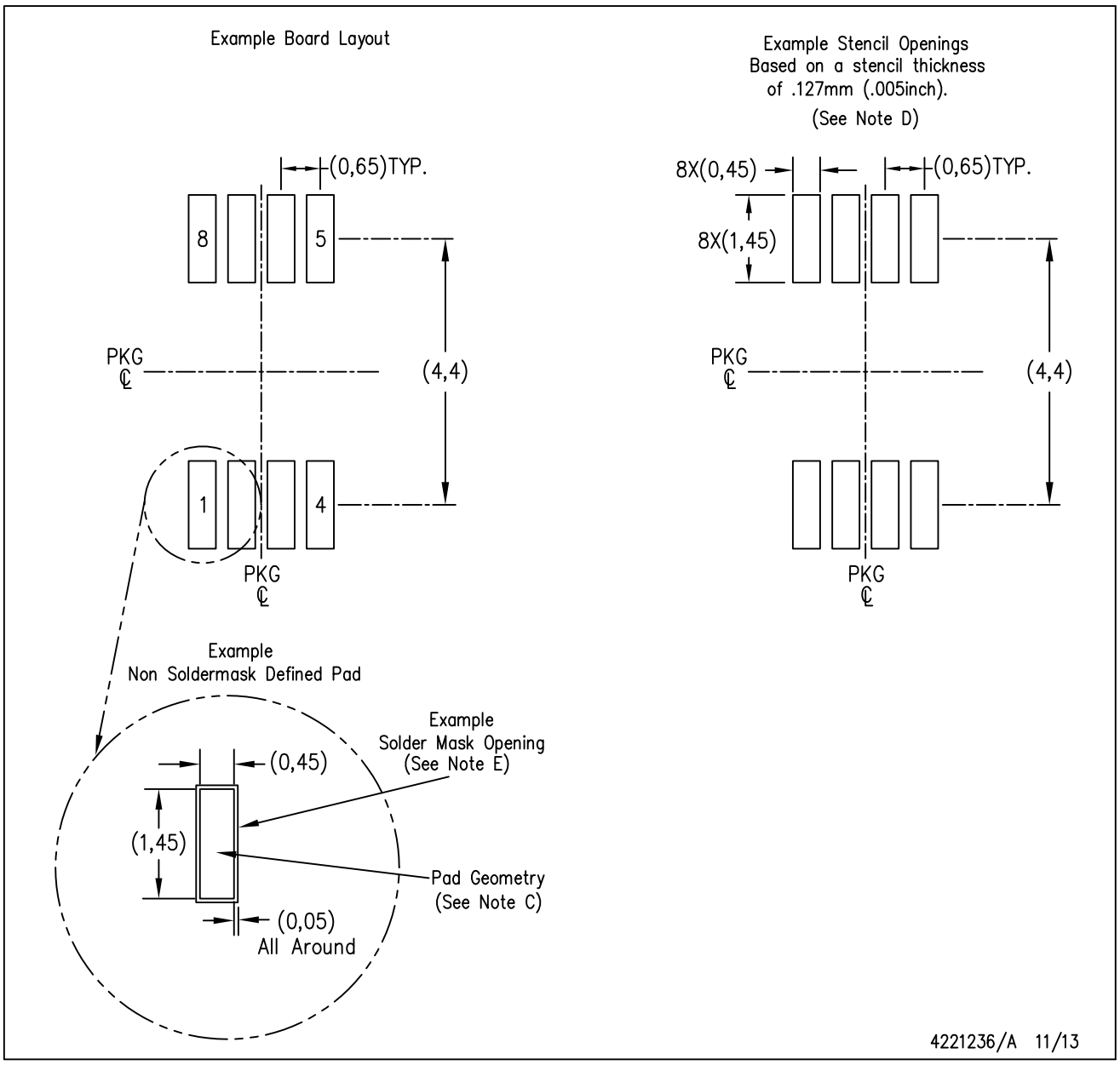

NOTES:
A. All linear dimensions are in millimeters.
B. This drawing is subject to change without notice.
C. Publication IPC–7351 is recommended for alternate designs.
D. Laser cutting apertures with trapezoidal walls and also rounding corners will offer better paste release. Customers should contact their board assembly site for stencil design recommendations. Refer to IPC–7525 for other stencil recommendations.
E. Customers should contact their board fabrication site for solder mask tolerances between and around signal pads.

IMPORTANT NOTICE

Texas Instruments Incorporated (TI) reserves the right to make corrections, enhancements, improvements and other changes to its semiconductor products and services per JESD46, latest issue, and to discontinue any product or service per JESD48, latest issue. Buyers should obtain the latest relevant information before placing orders and should verify that such information is current and complete.

TI's published terms of sale for semiconductor products (http://www.ti.com/sc/docs/stdterms.htm) apply to the sale of packaged integrated circuit products that TI has qualified and released to market. Additional terms may apply to the use or sale of other types of TI products and services.

Reproduction of significant portions of TI information in TI data sheets is permissible only if reproduction is without alteration and is accompanied by all associated warranties, conditions, limitations, and notices. TI is not responsible or liable for such reproduced documentation. Information of third parties may be subject to additional restrictions. Resale of TI products or services with statements different from or beyond the parameters stated by TI for that product or service voids all express and any implied warranties for the associated TI product or service and is an unfair and deceptive business practice. TI is not responsible or liable for any such statements.

Buyers and others who are developing systems that incorporate TI products (collectively, "Designers") understand and agree that Designers remain responsible for using their independent analysis, evaluation and judgment in designing their applications and that Designers have full and exclusive responsibility to assure the safety of Designers' applications and compliance of their applications (and of all TI products used in or for Designers' applications) with all applicable regulations, laws and other applicable requirements. Designer represents that, with respect to their applications, Designer has all the necessary expertise to create and implement safeguards that (1) anticipate dangerous consequences of failures, (2) monitor failures and their consequences, and (3) lessen the likelihood of failures that might cause harm and take appropriate actions. Designer agrees that prior to using or distributing any applications that include TI products, Designer will thoroughly test such applications and the functionality of such TI products as used in such applications.

TI's provision of technical, application or other design advice, quality characterization, reliability data or other services or information, including, but not limited to, reference designs and materials relating to evaluation modules, (collectively, "TI Resources") are intended to assist designers who are developing applications that incorporate TI products; by downloading, accessing or using TI Resources in any way, Designer (individually or, if Designer is acting on behalf of a company, Designer's company) agrees to use any particular TI Resource solely for this purpose and subject to the terms of this Notice.

TI's provision of TI Resources does not expand or otherwise alter TI's applicable published warranties or warranty disclaimers for TI products, and no additional obligations or liabilities arise from TI providing such TI Resources. TI reserves the right to make corrections, enhancements, improvements and other changes to its TI Resources. TI has not conducted any testing other than that specifically described in the published documentation for a particular TI Resource.

Designer is authorized to use, copy and modify any individual TI Resource only in connection with the development of applications that include the TI product(s) identified in such TI Resource. NO OTHER LICENSE, EXPRESS OR IMPLIED, BY ESTOPPEL OR OTHERWISE TO ANY OTHER TI INTELLECTUAL PROPERTY RIGHT, AND NO LICENSE TO ANY TECHNOLOGY OR INTELLECTUAL PROPERTY RIGHT OF TI OR ANY THIRD PARTY IS GRANTED HEREIN, including but not limited to any patent right, copyright, mask work right, or other intellectual property right relating to any combination, machine, or process in which TI products or services are used. Information regarding or referencing third-party products or services does not constitute a license to use such products or services, or a warranty or endorsement thereof. Use of TI Resources may require a license from a third party under the patents or other intellectual property of the third party, or a license from TI under the patents or other intellectual property of TI.

TI RESOURCES ARE PROVIDED "AS IS" AND WITH ALL FAULTS. TI DISCLAIMS ALL OTHER WARRANTIES OR REPRESENTATIONS, EXPRESS OR IMPLIED, REGARDING RESOURCES OR USE THEREOF, INCLUDING BUT NOT LIMITED TO ACCURACY OR COMPLETENESS, TITLE, ANY EPIDEMIC FAILURE WARRANTY AND ANY IMPLIED WARRANTIES OF MERCHANTABILITY, FITNESS FOR A PARTICULAR PURPOSE, AND NON-INFRINGEMENT OF ANY THIRD PARTY INTELLECTUAL PROPERTY RIGHTS. TI SHALL NOT BE LIABLE FOR AND SHALL NOT DEFEND OR INDEMNIFY DESIGNER AGAINST ANY CLAIM, INCLUDING BUT NOT LIMITED TO ANY INFRINGEMENT CLAIM THAT RELATES TO OR IS BASED ON ANY COMBINATION OF PRODUCTS EVEN IF DESCRIBED IN TI RESOURCES OR OTHERWISE. IN NO EVENT SHALL TI BE LIABLE FOR ANY ACTUAL, DIRECT, SPECIAL, COLLATERAL, INDIRECT, PUNITIVE, INCIDENTAL, CONSEQUENTIAL OR EXEMPLARY DAMAGES IN CONNECTION WITH OR ARISING OUT OF TI RESOURCES OR USE THEREOF, AND REGARDLESS OF WHETHER TI HAS BEEN ADVISED OF THE POSSIBILITY OF SUCH DAMAGES.

Unless TI has explicitly designated an individual product as meeting the requirements of a particular industry standard (e.g., ISO/TS 16949 and ISO 26262), TI is not responsible for any failure to meet such industry standard requirements.

Where TI specifically promotes products as facilitating functional safety or as compliant with industry functional safety standards, such products are intended to help enable customers to design and create their own applications that meet applicable functional safety standards and requirements. Using products in an application does not by itself establish any safety features in the application. Designers must ensure compliance with safety-related requirements and standards applicable to their applications. Designer may not use any TI products in life-critical medical equipment unless authorized officers of the parties have executed a special contract specifically governing such use. Life-critical medical equipment is medical equipment where failure of such equipment would cause serious bodily injury or death (e.g., life support, pacemakers, defibrillators, heart pumps, neurostimulators, and implantables). Such equipment includes, without limitation, all medical devices identified by the U.S. Food and Drug Administration as Class III devices and equivalent classifications outside the U.S.

TI may expressly designate certain products as completing a particular qualification (e.g., Q100, Military Grade, or Enhanced Product). Designers agree that it has the necessary expertise to select the product with the appropriate qualification designation for their applications and that proper product selection is at Designers' own risk. Designers are solely responsible for compliance with all legal and regulatory requirements in connection with such selection.

Designer will fully indemnify TI and its representatives against any damages, costs, losses, and/or liabilities arising out of Designer's non-compliance with the terms and provisions of this Notice.

Mailing Address: Texas Instruments, Post Office Box 655303, Dallas, Texas 75265
Copyright © 2017, Texas Instruments Incorporated