BURR-BROWN®



INA145

For most current data sheet and other product information, visit www.burr-brown.com

Programmable Gain DIFFERENCE AMPLIFIER

FEATURES

- DIFFERENTIAL GAIN = 1V/V TO 1000V/V: Set with External Resistors
- LOW QUIESCENT CURRENT: 570μA
- WIDE SUPPLY RANGE:
  Single Supply: 4.5V to 36V
  Dual Supplies: ±2.25V to ±18V
- HIGH COMMON-MODE VOLTAGE:
  +8V at V_S = +5V
  ±28V at V_S = ±15V
- LOW GAIN ERROR: 0.01%
- HIGH CMR: 86dB
- SO-8 PACKAGE

APPLICATIONS

- CURRENT SHUNT MEASUREMENTS
- SENSOR AMPLIFIER
- DIFFERENTIAL LINE RECEIVER
- BATTERY POWERED SYSTEMS

DESCRIPTION

The INA145 is a precision, unity-gain difference amplifier consisting of a precision op amp and on-chip precision resistor network. Two external resistors set the gain from 1V/V to 1000V/V. The input common-mode voltage range extends beyond the positive and negative rails.

On-chip precision resistors are laser-trimmed to achieve accurate gain and high common-mode rejection. Excellent TCR tracking of these resistors assures continued high precision over temperature.

The INA145 is available in the SO-8 surface-mount package specified for the extended industrial temperature range, –40°C to +85°C.

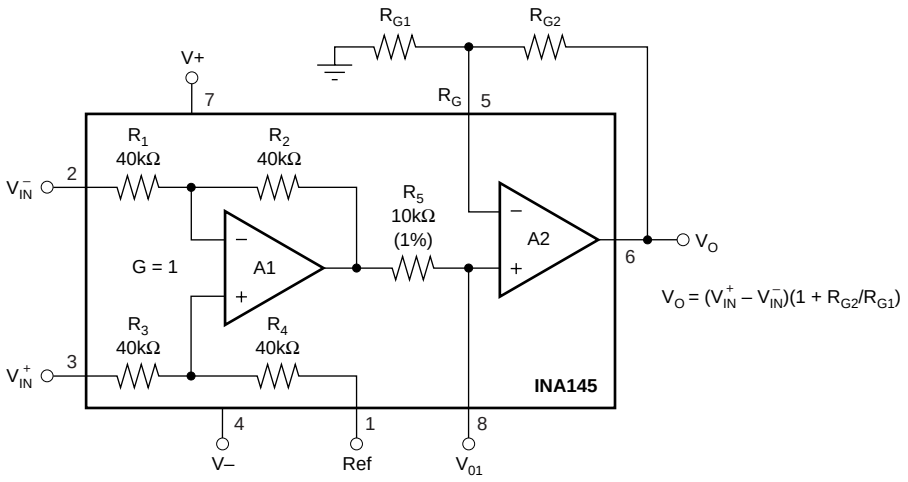

International Airport Industrial Park • Mailing Address: PO Box 11400, Tucson, AZ 85734 • Street Address: 6730 S. Tucson Blvd., Tucson, AZ 85706 • Tel: (520) 746-1111
Twx: 910-952-1111 • Internet: http://www.burr-brown.com/ • Cable: BBRCORP • Telex: 066-6491 • FAX: (520) 889-1510 • Immediate Product Info: (800) 548-6132

©1999 Burr-Brown Corporation
PDS-1567B
Printed in U.S.A. March, 2000
SBOS120

SPECIFICATIONS: V_S = ±2.25V to ±18V

Boldface limits apply over the specified temperature range, **T_A = –40°C to +85°C**

At T_A = +25°C, G = 1, R_L = 10kΩ connected to ground and ref pin connected to ground unless otherwise noted.

PARAMETER		CONDITION	INA145UA MIN	INA145UA TYP	INA145UA MAX	UNITS
OFFSET VOLTAGE, V_O		RTI[1, 2]				
Input Offset Voltage	V_{OS}	V_{CM} = V_O = 0V		±0.2	±1	mV
vs Temperature	$\Delta V_{OS}/\Delta T$			**See Typical Curve**		
vs Power Supply	PSRR	V_S = ±1.35V to ±18V		±20	±60	µV/V
vs Time				±0.3		µV/mo
Offset Voltage, V_{01}		RTI[1, 2]		±0.4		mV
INPUT VOLTAGE RANGE						
Common-Mode Voltage Range	V_{CM}	(V_{IN}+) – (V_{IN}–) = 0V, V_O = 0V	2(V–)		2(V+) –2	V
Common-Mode Rejection	CMRR	V_{CM} = 2(V–) to 2(V+) – 2V, R_S = 0Ω	76	86		dB
Over Temperature		V_S = ±15V	**70**	**80**		dB
INPUT BIAS CURRENT[2]		V_{CM} = V_S/2				
Bias Current	I_B			±50		nA
Offset Current	I_{OS}			±5		nA
INPUT IMPEDANCE						
Differential (non-inverting input)				80		kΩ
Differential (inverting input)				27		kΩ
Common-Mode				40		kΩ
NOISE		RTI[1, 3]				
Voltage Noise, f = 0.1Hz to 10Hz				2		µVp-p
Voltage Noise Density, f = 1kHz	e_n			90		nV/√Hz
GAIN				G = 1 to 1000		
Gain Equation				G = 1 + R_{G2}/R_{G1}		V/V
Initial[1]				1		V/V
Gain Error		R_L = 100kΩ, V_O = (V–)+0.15 to (V+)–1, G = 1		±0.01	±0.1	%
vs Temperature		**R_L = 100kΩ, V_O = (V–)+0.25 to (V+)–1, G = 1**		**±2**	**±10**	ppm/°C
		R_L = 10kΩ, V_O = (V–)+0.3 to (V+)–1.25, G = 1		±0.01	±0.1	%
vs Temperature		**R_L = 10kΩ, V_O = (V–)+0.5 to (V+)–1.25, G = 1**		**±2**	**±10**	ppm/°C
Nonlinearity		R_L = 10kΩ, V_O = (V–)+0.3 to (V+)–1.25, G = 1		±0.0002	±0.005	% of FS
FREQUENCY RESPONSE						
Small Signal Bandwidth		G = 1		500		kHz
		G = 10		50		kHz
Slew Rate				0.45		V/µs
Settling Time, 0.1%		G = 1, 10V Step		40		µs
0.01%		G = 1, 10V Step		90		µs
Overload Recovery		50% Input Overload		40		µs
OUTPUT, V_O						
Voltage Output		R_L = 100kΩ, G = 1	(V–) + 0.15		(V+) – 1	V
Over Temperature		**R_L = 100kΩ, G = 1**	**(V–) + 0.25**		**(V+) – 1**	V
		R_L = 10kΩ, G = 1	(V–) + 0.3		(V+) – 1.25	V
Over Temperature		**R_L = 10kΩ, G = 1**	**(V–) + 0.5**		**(V+) – 1.25**	V
Short-Circuit Current		Continuous to Common		±15		mA
Capacitive Load		Stable Operation		1000		pF
POWER SUPPLY						
Specified Voltage Range, Dual Supplies			±2.25		±18	V
Operating Voltage Range			±1.35		±18	V
Quiescent Current		V_{IN} = 0, I_O = 0		±570	±700	µA
Over Temperature					**±800**	µA
TEMPERATURE RANGE						
Specified Range			–40		+85	°C
Operating Range			–55		+125	°C
Storage Range			–55		+125	°C
Thermal Resistance	θ_{JA}			150		°C/W

NOTES: (1) Referred to input pins (V_{IN}+ and V_{IN}–), Gain = 1V/V. Specified with 10kΩ in feedback of A2. (2) Input offset voltage specification includes effects of amplifier's input bias and offset currents. (3) Includes effects of input bias current noise and thermal noise contribution of resistor network.

The information provided herein is believed to be reliable; however, BURR-BROWN assumes no responsibility for inaccuracies or omissions. BURR-BROWN assumes no responsibility for the use of this information, and all use of such information shall be entirely at the user's own risk. Prices and specifications are subject to change without notice. No patent rights or licenses to any of the circuits described herein are implied or granted to any third party. BURR-BROWN does not authorize or warrant any BURR-BROWN product for use in life support devices and/or systems.

SPECIFICATIONS: V_S = +5V Single Supply

Boldface limits apply over the specified temperature range, **T_A = –40°C to +85°C**

At T_A = +25°C, G = 1, R_L = 10kΩ connected to ground and ref pin connected to 2.5V unless otherwise noted.

PARAMETER		CONDITION	INA145UA MIN	INA145UA TYP	INA145UA MAX	UNITS
OFFSET VOLTAGE, V_O		RTI[1, 2]				
Input Offset Voltage	V_{OS}	V_{CM} = V_O = 2.5V		±0.35	±1	mV
vs Temperature	**$\Delta V_{OS}/\Delta T$**			**See Typical Curve**		
vs Power Supply Rejection Ratio	PSRR	V_S = ±1.35V to ±18V		±20	±60	µV/°C
vs Time				±0.3		µV/mo
Offset Voltage, V_{01}		RTI[1, 2]		±0.55		mV
INPUT VOLTAGE RANGE						
Common-Mode Voltage Range[3]	V_{CM}	V_{IN}+ – V_{IN}– = 0V, V_O = 2.5V	–2.5		5.5	V
Common-Mode Rejection Ratio	CMRR	V_{CM} = –2.5V to +5.5V, R_S = 0Ω	76	86		dB
Over Temperature				**80**		dB
INPUT BIAS CURRENT[2]						
Bias Current	I_B			±50		nA
Offset Current	I_{OS}			±5		nA
INPUT IMPEDANCE						
Differential (non-inverting input)				80		kΩ
Differential (inverting input)				27		kΩ
Common-Mode				40		kΩ
NOISE		RTI[1, 4]				
Voltage Noise, f = 0.1Hz to 10Hz				2		µVp-p
Voltage Noise Density, f = 1kHz	e_n			90		nV/√Hz
GAIN				G = 1 to 1000		V/V
Gain Equation				$G = 1 + R_{G2}/R_{G1}$		V/V
Initial[1]				1		V/V
Gain Error		R_L = 100kΩ, V_O = 0.15V to 4V, G = 1		±0.01	±0.1	%
vs Temperature		**R_L = 100kΩ, V_O = 0.25V to 4V, G = 1**		**±2**	**±10**	ppm/°C
		R_L = 10kΩ, V_O = 0.3V to 3.75V, G = 1		±0.01	±0.1	%
vs Temperature		**R_L = 10kΩ, V_O = 0.5V to 3.75V, G = 1**		**±2**	**±10**	ppm/°C
Nonlinearity		R_L = 10kΩ, V_O = +0.3 to +3.75, G = 1		±0.001	±0.005	% of FS
FREQUENCY RESPONSE						
Small Signal Bandwidth		G = 0.1		500		kHz
		G = 1		50		kHz
Slew Rate				0.45		V/µs
Settling Time, 0.1%		G = 1, 10V Step		40		µs
0.01%		G = 1, 10V Step		90		µs
Overload Recovery		50% Input Overload		40		µs
OUTPUT, V_O						
Voltage Output		R_L = 100kΩ, G = 1	0.15		4	V
Over Temperature		**R_L = 100kΩ, G = 1**	**0.25**		**4**	V
		R_L = 10kΩ, G = 1	0.3		3.75	V
Over Temperature		**R_L = 10kΩ, G = 1**	**0.5**		**3.75**	V
Short-Circuit Current		Continuous to Common		±15		mA
Capacitive Load		Stable Operation		1000		pF
POWER SUPPLY						
Specified Voltage Range, Single Supply			+4.5		+36	V
Operating Voltage Range			+2.7		+36	V
Quiescent Current		V_{IN} = 0, I_O = 0		550	700	µA
Over Temperature					**800**	µA
TEMPERATURE RANGE						
Specified Range			–40		+85	°C
Operating Range			–55		+125	°C
Storage Range			–55		+125	°C
Thermal Resistance	θ_{JA}			150		°C/W

NOTES: (1) Referred to input pins (V_{IN}+ and V_{IN}–), Gain = 1V/V. Specified with 10kΩ in feedback of A2. (2) Input offset voltage specification includes effects of amplifier's input bias and offset currents. (3) Common-mode voltage range with single supply is 2(V+) – 2V – V_{REF} to –V_{REF}. (4) Includes effects of input current noise and thermal noise contribution of resistor network.

AMPLIFIER A1, A2 PERFORMANCE

Boldface limits apply over the specified temperature range, **T_A = –40°C to +85°C**

At T_A = +25°C, G = 1, R_L = 10kΩ connected to ground and ref pin connected to ground unless otherwise noted.

PARAMETER		CONDITION	INA145UA MIN	INA145UA TYP	INA145UA MAX	UNITS
OFFSET VOLTAGE, V_O		RTI[1, 2]				
Input Offset Voltage	V_{OS}	V_S = ±15V, V_{CM} = V_O = 0V		±0.5		mV
vs Temperature	**$\Delta V_{OS}/\Delta T$**			**±1**		µV/°C
INPUT VOLTAGE RANGE						
Common-Mode Voltage Range	V_{CM}	V_{IN}+ – V_{IN}– = 0V, V_O = 0V		(V–) to (V+) –1		V
Common-Mode Rejection Ratio	CMRR	V_{CM} = (V–) to (V+) –1		90		dB
OPEN-LOOP GAIN						
Open Loop Gain	A_{OL}			110		dB
INPUT BIAS CURRENT[2]						
Bias Current	I_B			±50		nA
Offset Current	I_{OS}			±5		nA
RESISTOR AT A1 OUTPUT, V_{O1}						
Initial				10		kΩ
Error				±0.2		%
Temperature Drift Coefficient				±50		ppm/°C

PIN CONFIGURATION

Top View **SO-8**

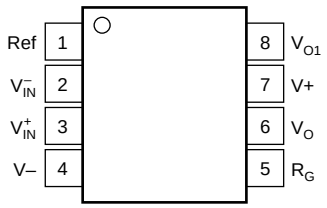

ABSOLUTE MAXIMUM RATINGS[1]

Supply Voltage, V+ to V–	36V
Signal Input Terminals, Voltage	±80V
Current	±1mA
Output Short Circuit (to ground)	Continuous
Operating Temperature	–55°C to +125°C
Storage Temperature	–55°C to +150°C
Junction Temperature	+150°C
Lead Temperature (soldering, 10s)	+240°C

NOTE: (1) Stresses above these ratings may cause permanent damage. Exposure to absolute maximum conditions for extended periods may degrade device reliability.

ELECTROSTATIC DISCHARGE SENSITIVITY

This integrated circuit can be damaged by ESD. Burr-Brown recommends that all integrated circuits be handled with appropriate precautions. Failure to observe proper handling and installation procedures can cause damage.

ESD damage can range from subtle performance degradation to complete device failure. Precision integrated circuits may be more susceptible to damage because very small parametric changes could cause the device not to meet its published specifications.

PACKAGE/ORDERING INFORMATION

PRODUCT	PACKAGE	PACKAGE DRAWING NUMBER	SPECIFIED TEMPERATURE RANGE	PACKAGE MARKING	ORDERING NUMBER[1]	TRANSPORT MEDIA
INA145UA	SO-8	182	–40°C to +85°C	INA145UA	INA145UA	Rails
"	"	"	"	"	INA145UA/2K5	Tape and Reel

NOTE: (1) Models with a slash (/) are available only in Tape and Reel in the quantities indicated (e.g., /2K5 indicates 2500 devices per reel). Ordering 2500 pieces of "INA145UA/2K5" will get a single 2500-piece Tape and Reel.

TYPICAL PERFORMANCE CURVES

At T_A = +25°C, V_S = ±15V, G = 1, R_L = 10kΩ connected to ground and Ref pin connected to ground, unless otherwise noted.

GAIN vs FREQUENCY

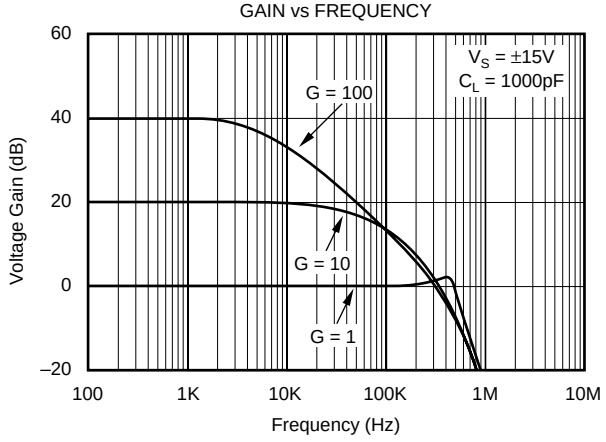

GAIN vs FREQUENCY

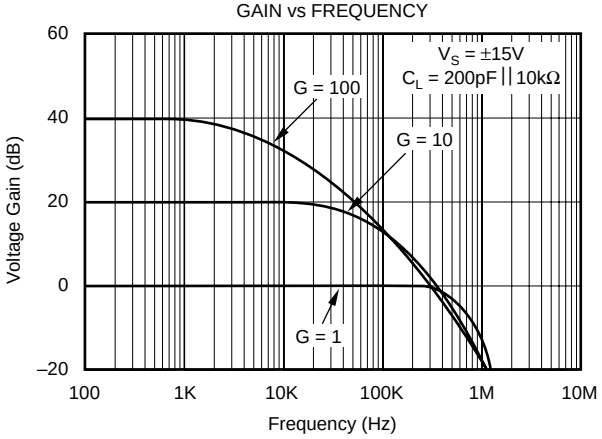

COMMON-MODE REJECTION vs FREQUENCY

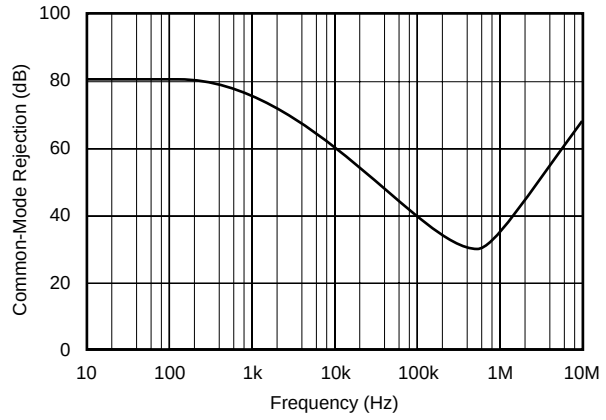

POWER SUPPLY REJECTION vs FREQUENCY

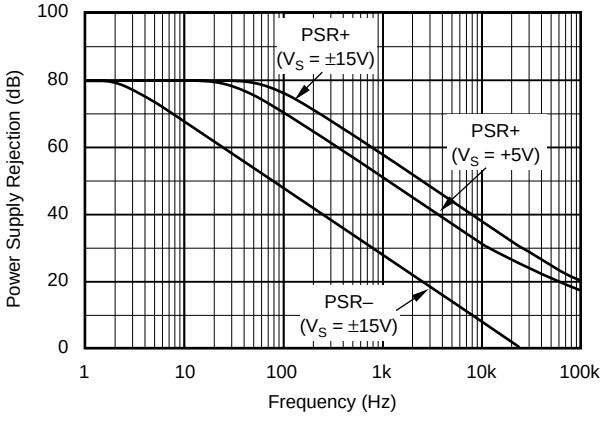

INPUT VOLTAGE NOISE DENSITY

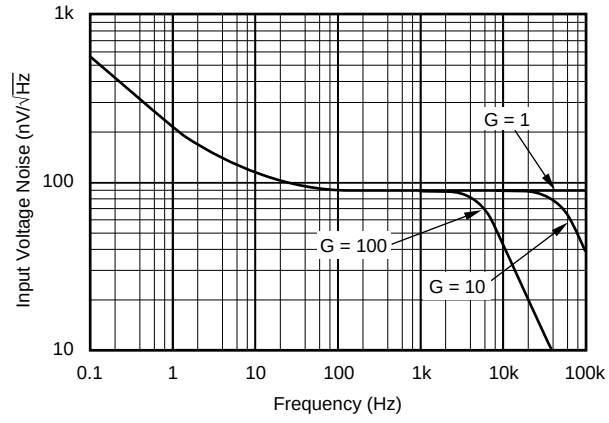

0.1Hz to 10Hz VOLTAGE NOISE (RTI)

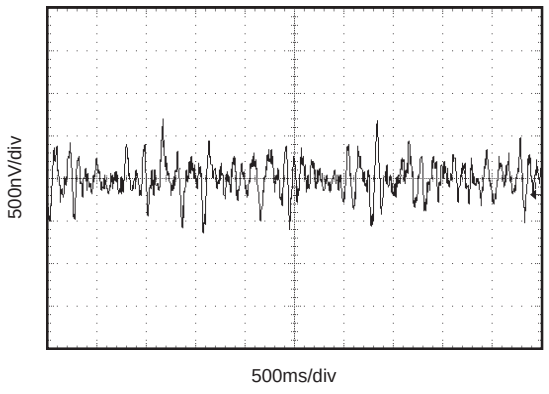

TYPICAL PERFORMANCE CURVES (Cont.)

At T_A = +25°C, V_S = ±15V, G = 1, R_L = 10kΩ connected to ground and Ref pin connected to ground, unless otherwise noted.

QUIESCENT CURRENT AND
SHORT-CIRCUIT CURRENT vs TEMPERATURE

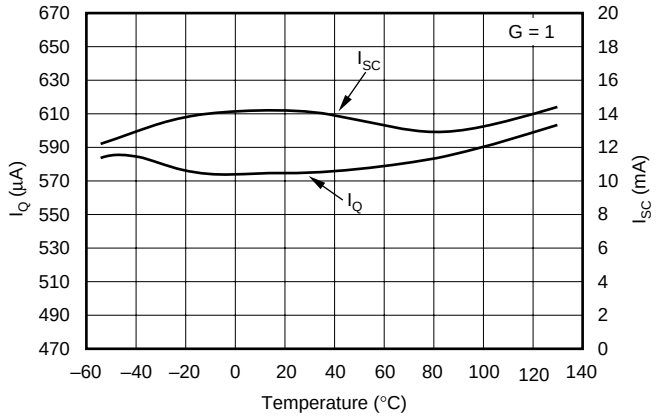

SLEW RATE vs TEMPERATURE

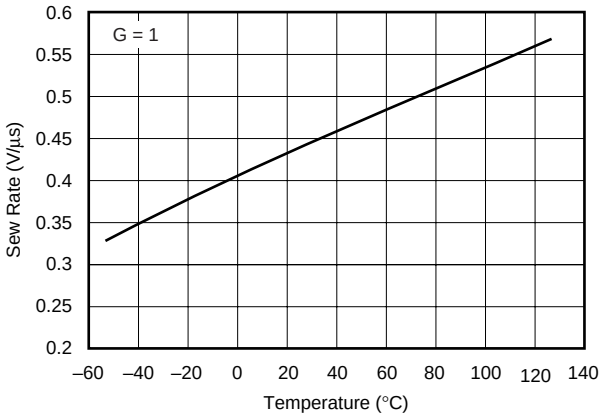

GAIN AND PHASE vs FREQUENCY
Op Amp A1 and A2

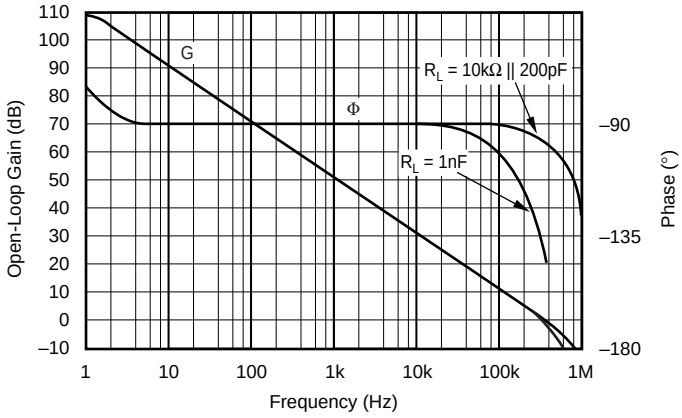

SETTLING TIME vs LOAD CAPACITANCE

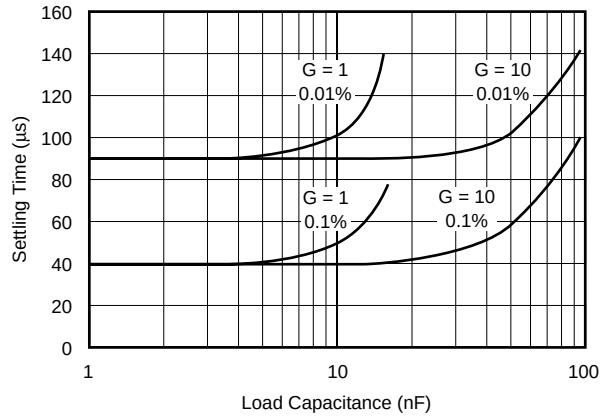

MAXIMUM OUTPUT VOLTAGE SWING
vs OUTPUT CURRENT

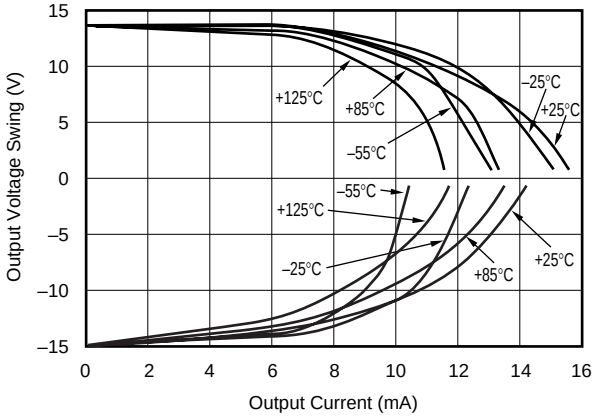

OFFSET VOLTAGE
PRODUCTION DISTRIBUTION

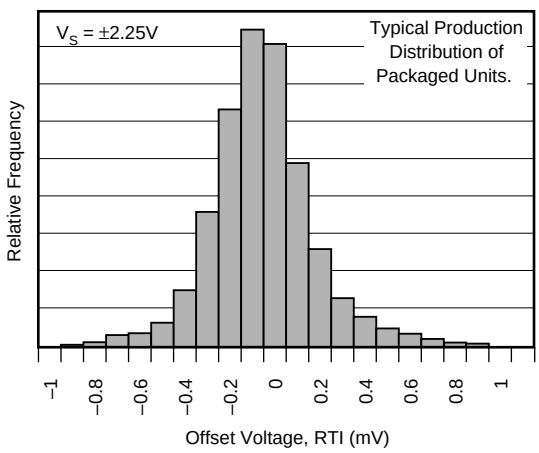

TYPICAL PERFORMANCE CURVES (Cont.)

At T_A = +25°C, V_S = ±15V, G = 1, R_L = 10kΩ connected to ground and Ref pin connected to ground, unless otherwise noted.

OFFSET VOLTAGE
PRODUCTION DISTRIBUTION

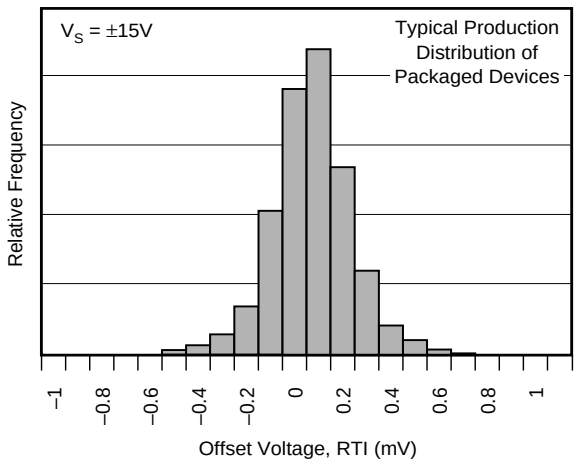

OFFSET VOLTAGE DRIFT
PRODUCTION DISTRIBUTION

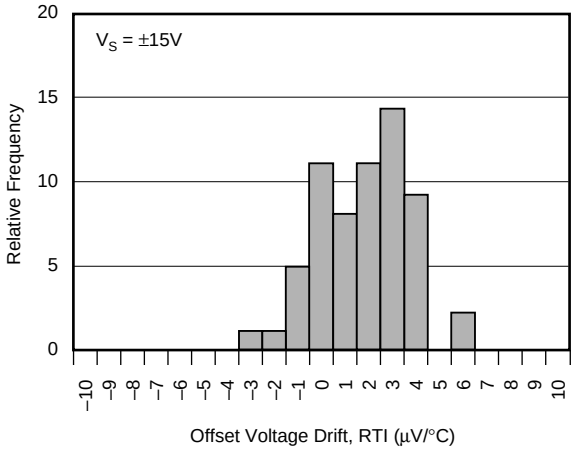

SMALL-SIGNAL STEP RESPONSE
(G = 1, R_L = 10kΩ, C_L = 200pF)

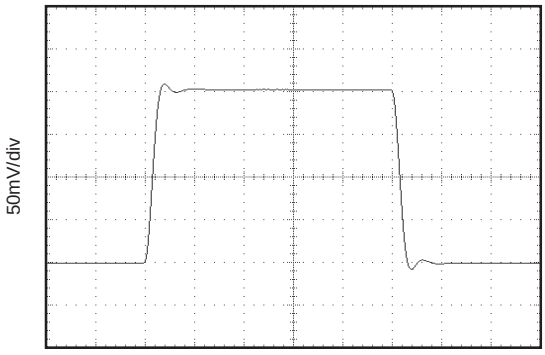

SMALL-SIGNAL STEP RESPONSE
(G = 1, C_L = 1000pF)

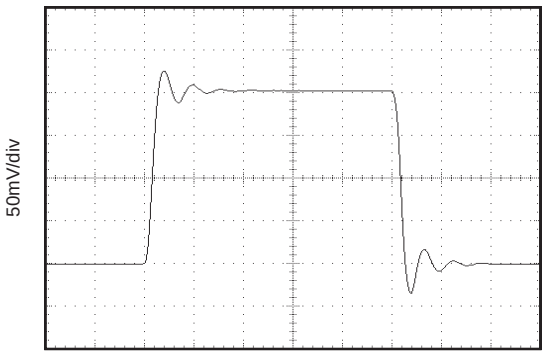

SMALL-SIGNAL STEP RESPONSE
(G = 10, C_L = 1000pF)

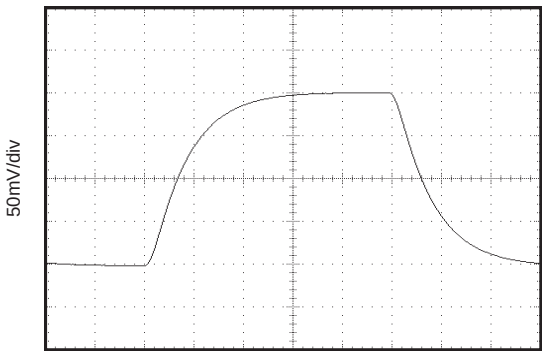

LARGE-SIGNAL STEP RESPONSE
(G = 10, R_L = 10kΩ, C_L = 200pF)

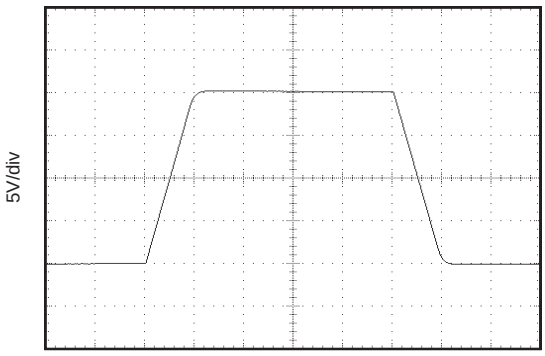

APPLICATION INFORMATION

The INA145 is a programmable gain difference amplifier consisting of a gain of 1 difference amplifier and a programmable-gain output buffer stage. Basic circuit connections are shown in Figure 1. Power supply bypass capacitors should be connected close to pins 4 and 7, as shown. The amplifier is programmable in the range of G = 1 to G = 1000 with two external resistors.

The output of A1 is connected to the noninverting input of A2 through a 10kΩ resistor which is trimmed to ±1% absolute accuracy. The A2 input is available for applications such as a filter or a precision current source. See application figures for examples.

OPERATING VOLTAGE

The INA145 is fully specified for supply voltages from ±2.25V to ±18V, with key parameters guaranteed over the temperature range –40°C to +85°C. The INA145 can be operated with single or dual supplies, with excellent performance. Parameters that vary significantly with operating voltage, load conditions, or temperature are shown in the typical performance curves.

SETTING THE GAIN

The gain of the INA145 is set by using two external resistors, R_{G1} and R_{G2}, according to the equation:

$$G = 1 + R_{G2}/R_{G1}$$

For a total gain of 1, A2 is connected as a buffer amplifier with no R_{G1}. A feedback resistor, R_{G2} = 10kΩ, should be used in the buffer connection. This provides bias current cancellation (in combination with internal R_5) to assure specified offset voltage performance. Commonly used values are shown in the table of Figure 1. Resistor values for other gains should be chosen to provide a 10kΩ parallel resistance.

COMMON-MODE RANGE

The input resistors of the INA145 provides an input common-mode range that extends well beyond the power supply rails. Exact range depends on the power supply voltage and the voltage applied to the Ref terminal (pin 1). To assure proper operation, the voltage at the non-inverting input of A1 (an internal node) must be within its linear operating range. Its voltage is determined by the simple 1:1 voltage divider between pin 3 and pin 1. This voltage must be between V– and (V+) – 1V.

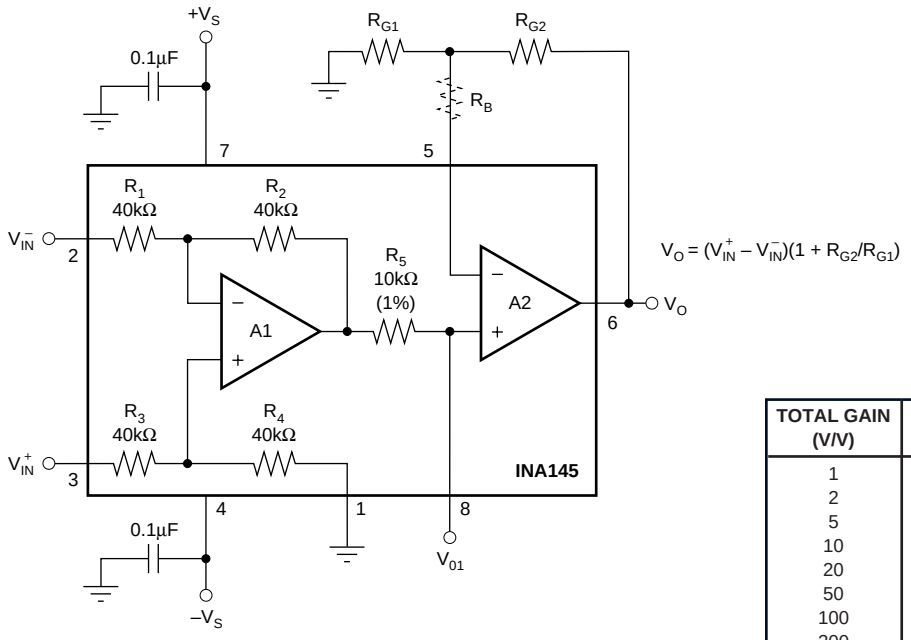

		STANDARD 1% RESISTORS		
TOTAL GAIN (V/V)	A2 GAIN (V/V)	R_{G1} (W)	R_{G2} (W)	R_B (W)
1	1	(None)	10k	—
2	2	20k	20k	—
5	5	12.4k	49.9k	—
10	10	11.0k	100k	—
20	20	10.5k	200k	—
50	50	10.2k	499k	—
100	100	10.2k	1M	—
200	200	499	100k	9.53k
500	500	100	49.9k	10k
1000	1000	100	100k	10k

FIGURE 1. Basic Circuit Connections.

OFFSET TRIM

The INA145 is laser-trimmed for low offset voltage and drift. Most applications require no external offset adjustment. Figure 2 shows an optional circuit for trimming the offset voltage. A voltage applied to the Ref terminal will be summed with the output signal. This can be used to null offset voltage. To maintain good common-mode rejection, the source impedance of a signal applied to the Ref terminal should be less than 10Ω and a resistor added to the positive input terminal should be 10 times that, or 100Ω. Alternatively, the trim voltage can be buffered with an op amp such as the OPA277.

INPUT IMPEDANCE

The input impedance of the INA145 is determined by the input resistor network and is approximately 40kΩ. The source impedance at the two input terminals must be nearly equal to maintain good common-mode rejection. A 5Ω mismatch in impedance between the two inputs will cause the typical common-mode rejection to be degraded to approximately 72dB. Figure 7 shows a common application measuring power supply current through a shunt resistor. The source impedance of the shunt resistor, R_S, is balanced by an equal compensation resistor, R_C.

Source impedances greater than 300Ω are not recommended, even if they are perfectly matched. Internal resistors are laser trimmed for accurate ratios, not to absolute values. Adding equal resistors greater than 300Ω can cause a mismatch in the total resistor ratios, degrading CMR.

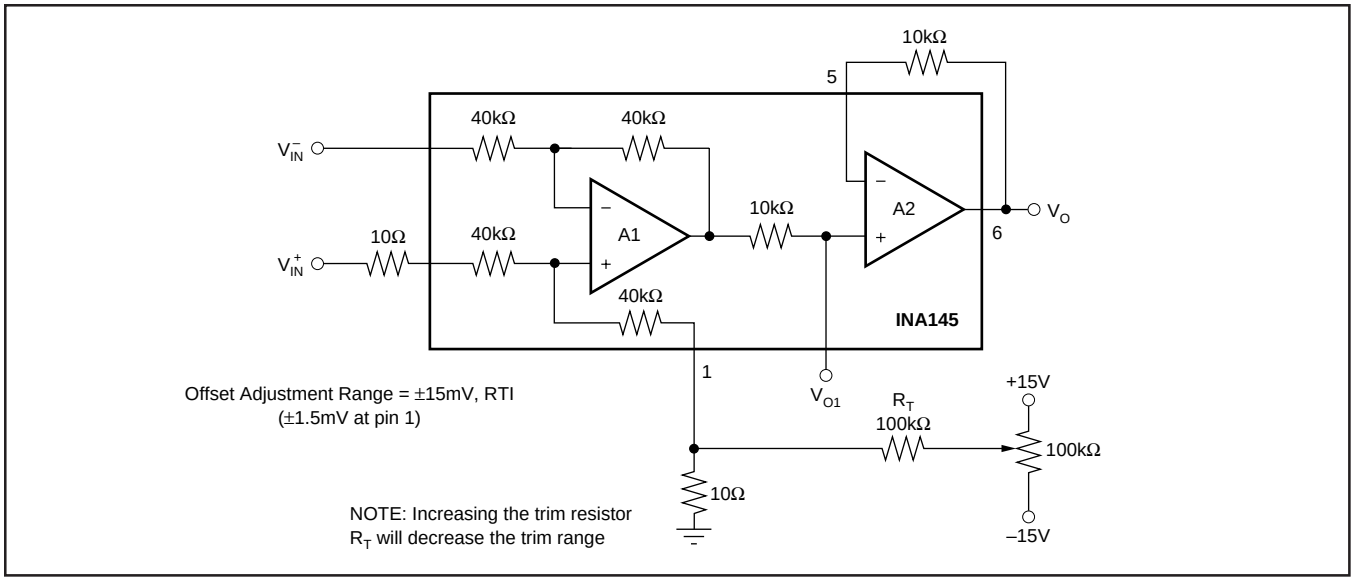

FIGURE 2. Optional Offset Trim Circuit.

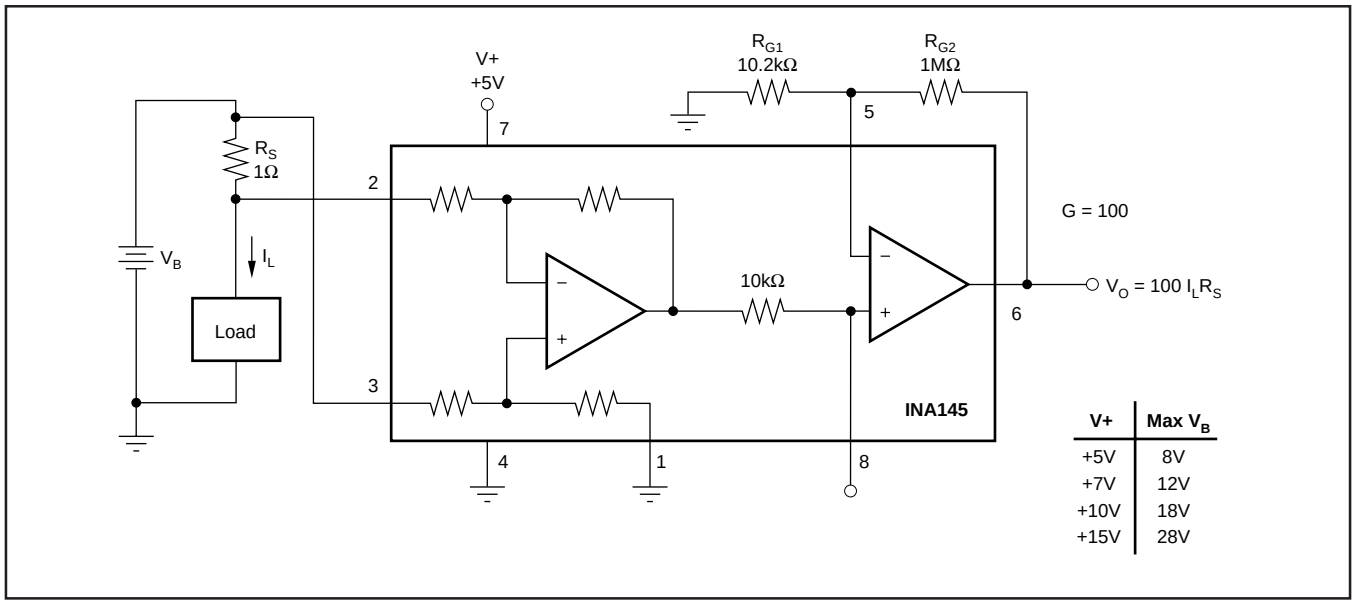

FIGURE 3. Measuring Current with Shunt Resistor.

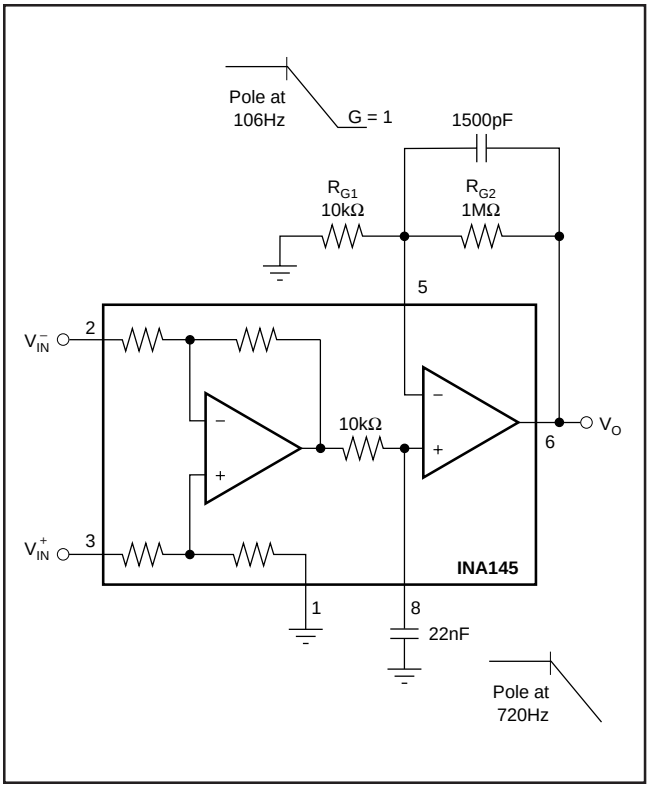

FIGURE 4. Noise Filtering.

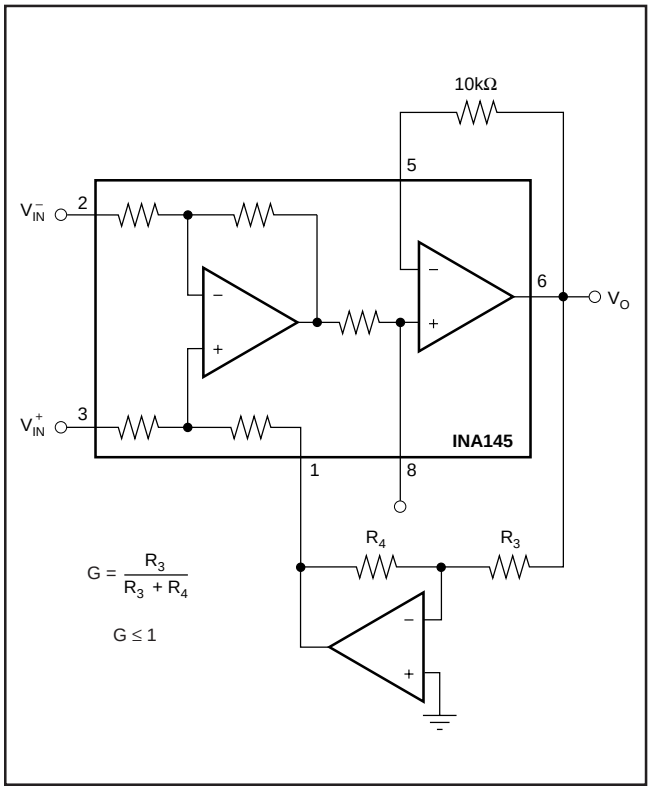

FIGURE 5. Creating Gains Less Than Unity.

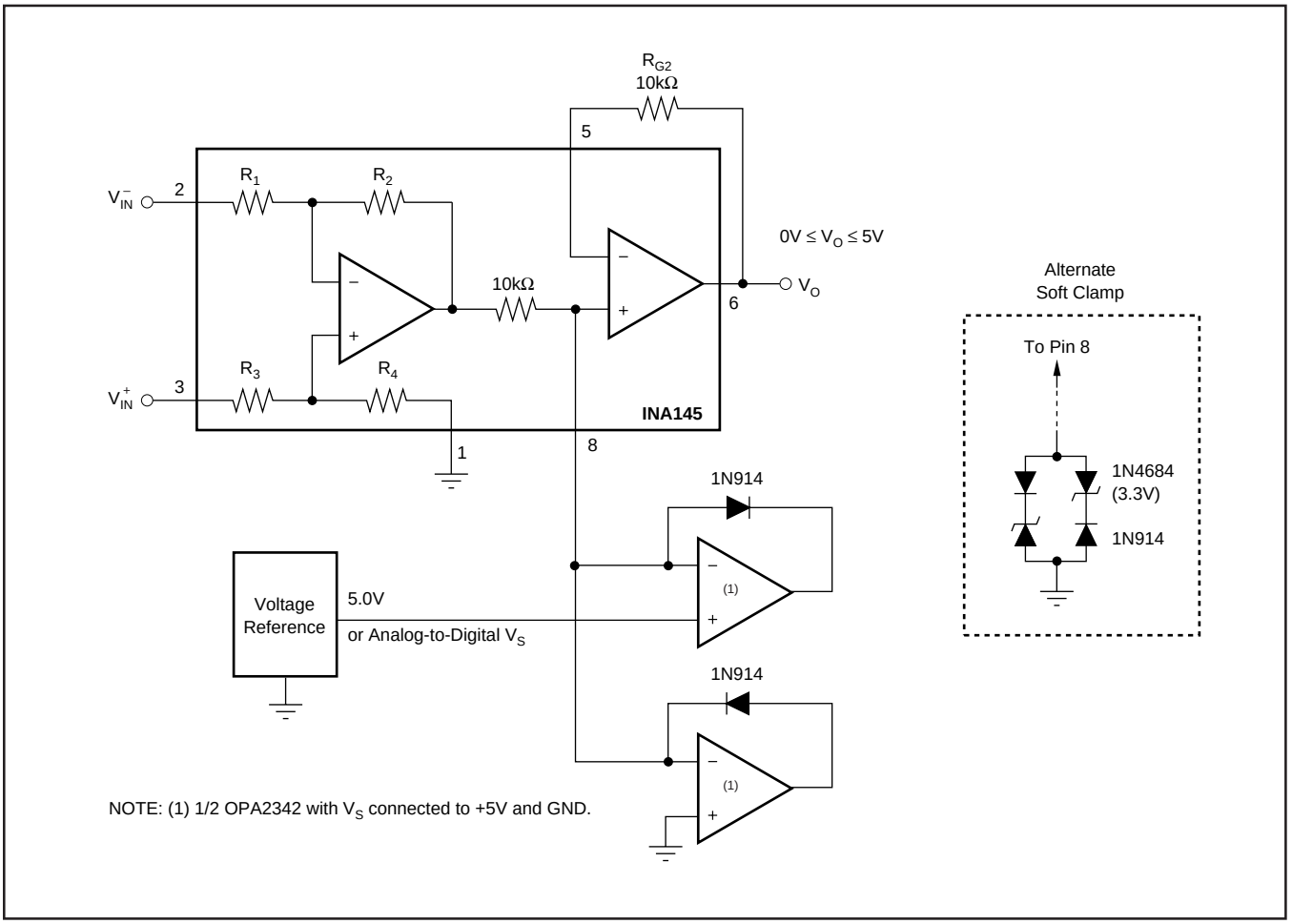

FIGURE 6. Clamp Circuits.

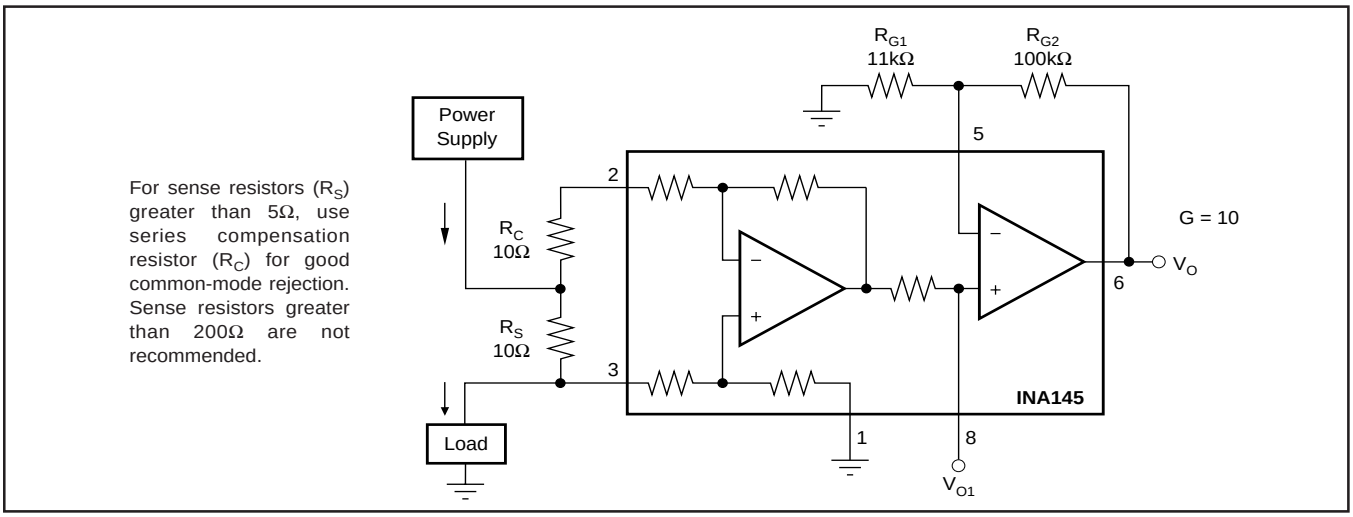

FIGURE 7. Current Monitor, G = 1.

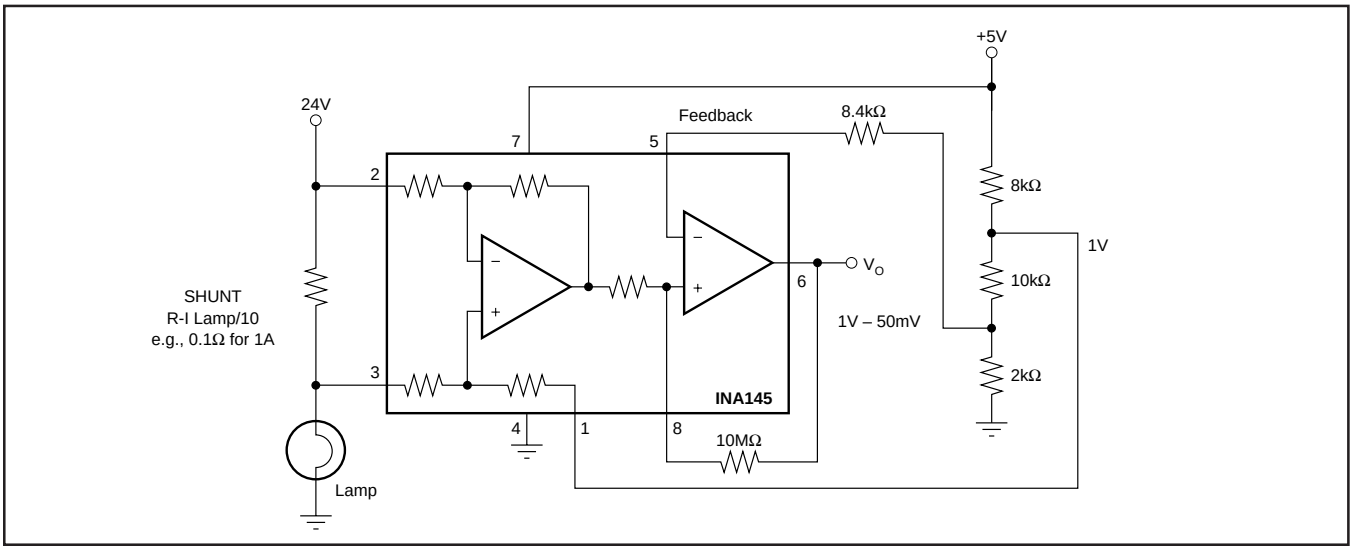

FIGURE 8. Comparator Output with Optional Hysteresis Application to Sense Lamp Burn-Out.

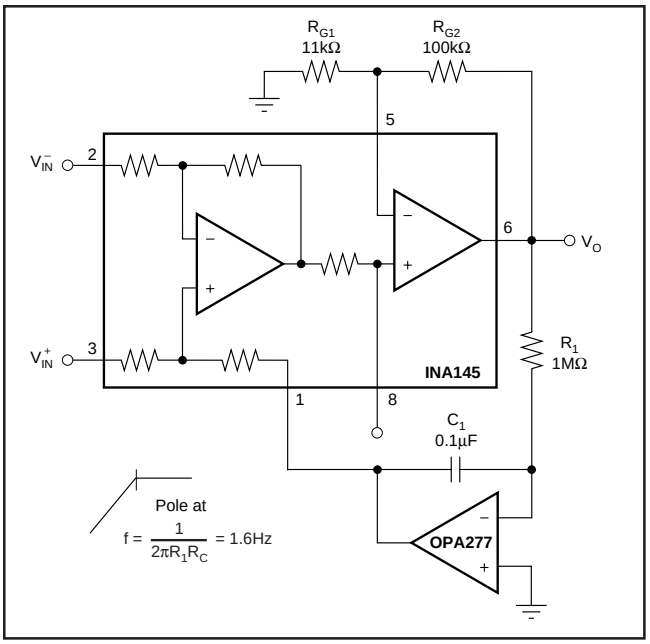

FIGURE 9. AC Coupling (DC Restoration).

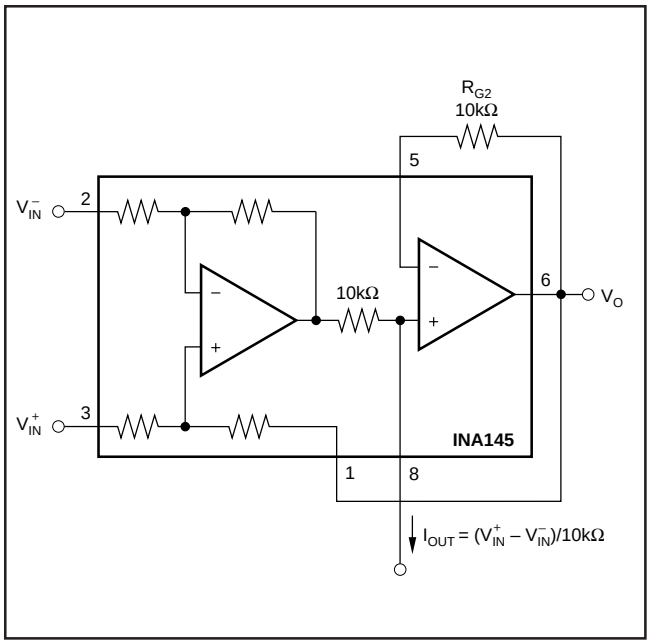

FIGURE 10. Precision Current Source.

PACKAGING INFORMATION

Orderable Device	Status (1)	Package Type	Package Drawing	Pins	Package Qty	Eco Plan (2)	Lead/Ball Finish	MSL Peak Temp (3)
INA145UA	ACTIVE	SOIC	D	8	75	Green (RoHS & no Sb/Br)	CU NIPDAU	Level-3-260C-168 HR
INA145UA/2K5	ACTIVE	SOIC	D	8	2500	Green (RoHS & no Sb/Br)	CU NIPDAU	Level-3-260C-168 HR
INA145UA/2K5E4	ACTIVE	SOIC	D	8	2500	Green (RoHS & no Sb/Br)	CU NIPDAU	Level-3-260C-168 HR
INA145UAE4	ACTIVE	SOIC	D	8	75	Green (RoHS & no Sb/Br)	CU NIPDAU	Level-3-260C-168 HR

(1) The marketing status values are defined as follows:
ACTIVE: Product device recommended for new designs.
LIFEBUY: TI has announced that the device will be discontinued, and a lifetime-buy period is in effect.
NRND: Not recommended for new designs. Device is in production to support existing customers, but TI does not recommend using this part in a new design.
PREVIEW: Device has been announced but is not in production. Samples may or may not be available.
OBSOLETE: TI has discontinued the production of the device.

(2) Eco Plan - The planned eco-friendly classification: Pb-Free (RoHS), Pb-Free (RoHS Exempt), or Green (RoHS & no Sb/Br) - please check http://www.ti.com/productcontent for the latest availability information and additional product content details.
TBD: The Pb-Free/Green conversion plan has not been defined.
Pb-Free (RoHS): TI's terms "Lead-Free" or "Pb-Free" mean semiconductor products that are compatible with the current RoHS requirements for all 6 substances, including the requirement that lead not exceed 0.1% by weight in homogeneous materials. Where designed to be soldered at high temperatures, TI Pb-Free products are suitable for use in specified lead-free processes.
Pb-Free (RoHS Exempt): This component has a RoHS exemption for either 1) lead-based flip-chip solder bumps used between the die and package, or 2) lead-based die adhesive used between the die and leadframe. The component is otherwise considered Pb-Free (RoHS compatible) as defined above.
Green (RoHS & no Sb/Br): TI defines "Green" to mean Pb-Free (RoHS compatible), and free of Bromine (Br) and Antimony (Sb) based flame retardants (Br or Sb do not exceed 0.1% by weight in homogeneous material)

(3) MSL, Peak Temp. -- The Moisture Sensitivity Level rating according to the JEDEC industry standard classifications, and peak solder temperature.

Important Information and Disclaimer: The information provided on this page represents TI's knowledge and belief as of the date that it is provided. TI bases its knowledge and belief on information provided by third parties, and makes no representation or warranty as to the accuracy of such information. Efforts are underway to better integrate information from third parties. TI has taken and continues to take reasonable steps to provide representative and accurate information but may not have conducted destructive testing or chemical analysis on incoming materials and chemicals. TI and TI suppliers consider certain information to be proprietary, and thus CAS numbers and other limited information may not be available for release.

In no event shall TI's liability arising out of such information exceed the total purchase price of the TI part(s) at issue in this document sold by TI to Customer on an annual basis.

TAPE AND REEL INFORMATION

REEL DIMENSIONS

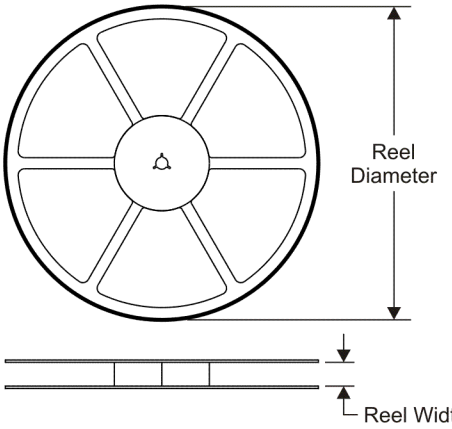

TAPE DIMENSIONS

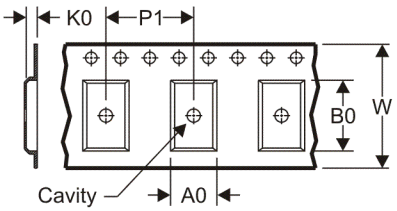

A0	Dimension designed to accommodate the component width
B0	Dimension designed to accommodate the component length
K0	Dimension designed to accommodate the component thickness
W	Overall width of the carrier tape
P1	Pitch between successive cavity centers

QUADRANT ASSIGNMENTS FOR PIN 1 ORIENTATION IN TAPE

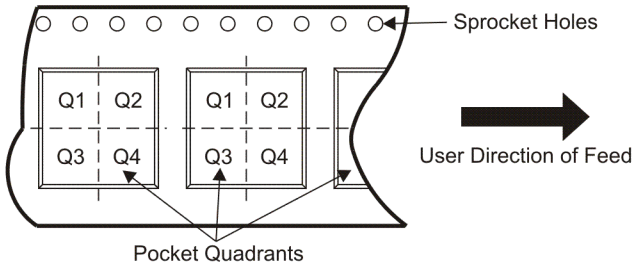

*All dimensions are nominal

Device	Package Type	Package Drawing	Pins	SPQ	Reel Diameter (mm)	Reel Width W1 (mm)	A0 (mm)	B0 (mm)	K0 (mm)	P1 (mm)	W (mm)	Pin1 Quadrant
INA145UA/2K5	SOIC	D	8	2500	330.0	12.4	6.4	5.2	2.1	8.0	12.0	Q1

TAPE AND REEL BOX DIMENSIONS

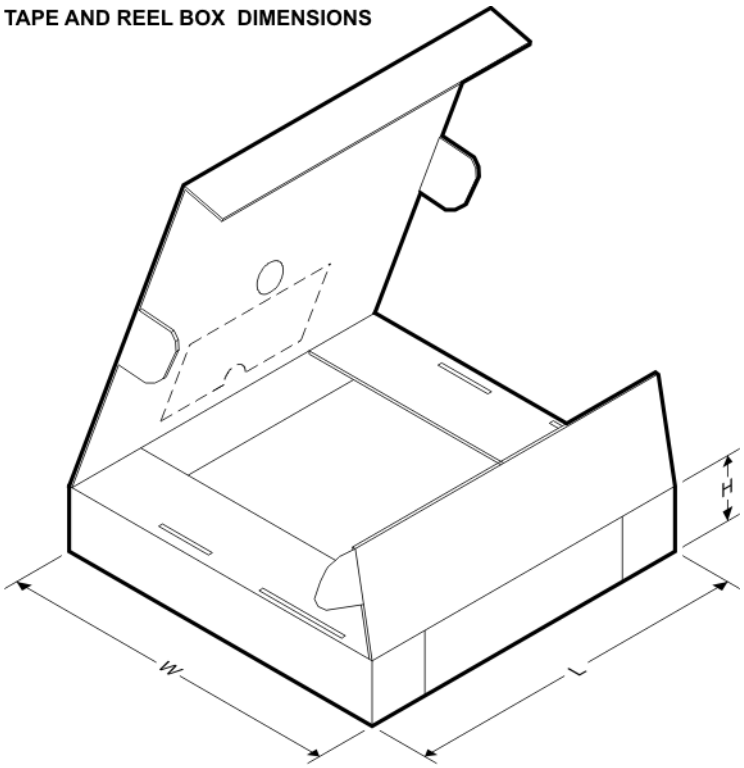

*All dimensions are nominal

Device	Package Type	Package Drawing	Pins	SPQ	Length (mm)	Width (mm)	Height (mm)
INA145UA/2K5	SOIC	D	8	2500	346.0	346.0	29.0

IMPORTANT NOTICE

Texas Instruments Incorporated and its subsidiaries (TI) reserve the right to make corrections, modifications, enhancements, improvements, and other changes to its products and services at any time and to discontinue any product or service without notice. Customers should obtain the latest relevant information before placing orders and should verify that such information is current and complete. All products are sold subject to TI's terms and conditions of sale supplied at the time of order acknowledgment.

TI warrants performance of its hardware products to the specifications applicable at the time of sale in accordance with TI's standard warranty. Testing and other quality control techniques are used to the extent TI deems necessary to support this warranty. Except where mandated by government requirements, testing of all parameters of each product is not necessarily performed.

TI assumes no liability for applications assistance or customer product design. Customers are responsible for their products and applications using TI components. To minimize the risks associated with customer products and applications, customers should provide adequate design and operating safeguards.

TI does not warrant or represent that any license, either express or implied, is granted under any TI patent right, copyright, mask work right, or other TI intellectual property right relating to any combination, machine, or process in which TI products or services are used. Information published by TI regarding third-party products or services does not constitute a license from TI to use such products or services or a warranty or endorsement thereof. Use of such information may require a license from a third party under the patents or other intellectual property of the third party, or a license from TI under the patents or other intellectual property of TI.

Reproduction of TI information in TI data books or data sheets is permissible only if reproduction is without alteration and is accompanied by all associated warranties, conditions, limitations, and notices. Reproduction of this information with alteration is an unfair and deceptive business practice. TI is not responsible or liable for such altered documentation. Information of third parties may be subject to additional restrictions.

Resale of TI products or services with statements different from or beyond the parameters stated by TI for that product or service voids all express and any implied warranties for the associated TI product or service and is an unfair and deceptive business practice. TI is not responsible or liable for any such statements.

TI products are not authorized for use in safety-critical applications (such as life support) where a failure of the TI product would reasonably be expected to cause severe personal injury or death, unless officers of the parties have executed an agreement specifically governing such use. Buyers represent that they have all necessary expertise in the safety and regulatory ramifications of their applications, and acknowledge and agree that they are solely responsible for all legal, regulatory and safety-related requirements concerning their products and any use of TI products in such safety-critical applications, notwithstanding any applications-related information or support that may be provided by TI. Further, Buyers must fully indemnify TI and its representatives against any damages arising out of the use of TI products in such safety-critical applications.

TI products are neither designed nor intended for use in military/aerospace applications or environments unless the TI products are specifically designated by TI as military-grade or "enhanced plastic." Only products designated by TI as military-grade meet military specifications. Buyers acknowledge and agree that any such use of TI products which TI has not designated as military-grade is solely at the Buyer's risk, and that they are solely responsible for compliance with all legal and regulatory requirements in connection with such use.

TI products are neither designed nor intended for use in automotive applications or environments unless the specific TI products are designated by TI as compliant with ISO/TS 16949 requirements. Buyers acknowledge and agree that, if they use any non-designated products in automotive applications, TI will not be responsible for any failure to meet such requirements.

Following are URLs where you can obtain information on other Texas Instruments products and application solutions:

Products		**Applications**	
Amplifiers	amplifier.ti.com	Audio	www.ti.com/audio
Data Converters	dataconverter.ti.com	Automotive	www.ti.com/automotive
DLP® Products	www.dlp.com	Broadband	www.ti.com/broadband
DSP	dsp.ti.com	Digital Control	www.ti.com/digitalcontrol
Clocks and Timers	www.ti.com/clocks	Medical	www.ti.com/medical
Interface	interface.ti.com	Military	www.ti.com/military
Logic	logic.ti.com	Optical Networking	www.ti.com/opticalnetwork
Power Mgmt	power.ti.com	Security	www.ti.com/security
Microcontrollers	microcontroller.ti.com	Telephony	www.ti.com/telephony
RFID	www.ti-rfid.com	Video & Imaging	www.ti.com/video
RF/IF and ZigBee® Solutions	www.ti.com/lprf	Wireless	www.ti.com/wireless

Mailing Address: Texas Instruments, Post Office Box 655303, Dallas, Texas 75265
Copyright © 2009, Texas Instruments Incorporated