9-Line Plug and Play SCSI Terminator

The 9-channel IMP5218 SCSI terminator is part of IMP's family of high-performance SCSI terminators that deliver true UltraSCSI performance. The BiCMOS design offers superior performance over first generation linear regulator / resistor based terminators.

The IMP5218 has two disconnect pins for SCSI Plug and Play (PnP) applications.

IMP's new architecture employs high-speed adaptive elements for each channel, thereby providing the fastest response possible - typically 35MHz, which is 100 times faster than the older linear regulator terminator approach. The bandwidth of terminators based on the older regulator / resistor terminator architecture is limited to 500kHz since a large output stabilization capacitor is required. The IMP architecture eliminates the external output compensation capacitor and the need for transient output capacitors while maintaining pin compatibility with first generation designs. Reduced component count is inherent with the IMP5218.

The IMP5218 architecture tolerates marginal system designs. A key improvement offered by the IMP5218 lies in its ability to insure reliable, error-free communications even in systems which do not adhere to recommended SCSI hardware design guidelines, such as improper cable lengths and impedance. Frequently, this situation is not controlled by the peripheral or host designer.

For portable and configurable peripherals, the IMP5218 can be placed in a sleep mode with two disconnect signals. When disabled, the quiescent current is typically 375µA, and the outputs are in a high impedance state.

Key Features

- SCSI plug and play
  - — Dual disconnect pins
  - — Logic LOW disconnects lines
- Hot swap compatible
- Ultra-Fast response for Fast-20 SCSI applications
- 35MHz channel bandwidth
- 3.5V operation
- Less than 3pF output capacitance
- 375µA disable-mode current
- Thermally self limiting
- No external compensation capacitors
- Implements 8-bit or 16-bit (wide) applications
- Compatible with active negation drivers (60mA / channel)
- Compatible with passive and active terminations
- Approved for use with SCSI 1, 2, 3 and UltraSCSI

Block Diagrams

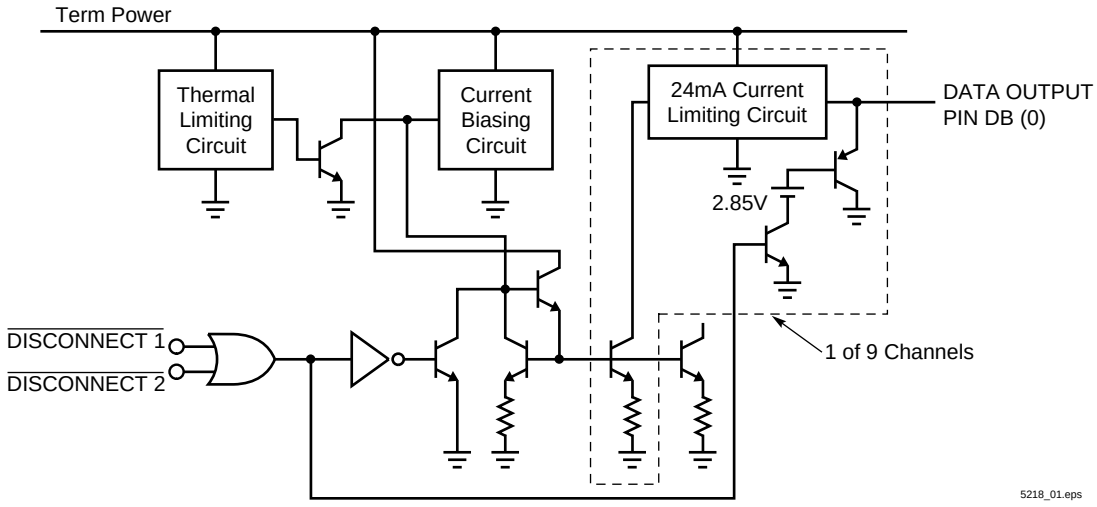

Pin Configuration

SOWB-16

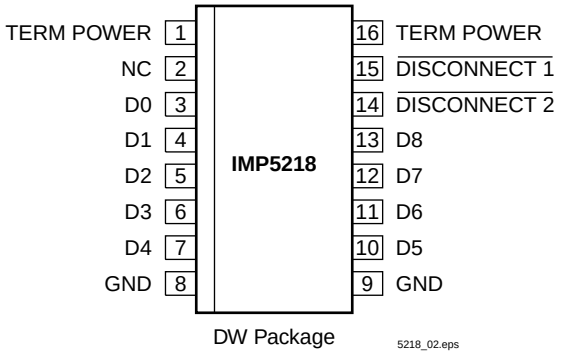

DW Package

5218_02.eps

TSSOP-20

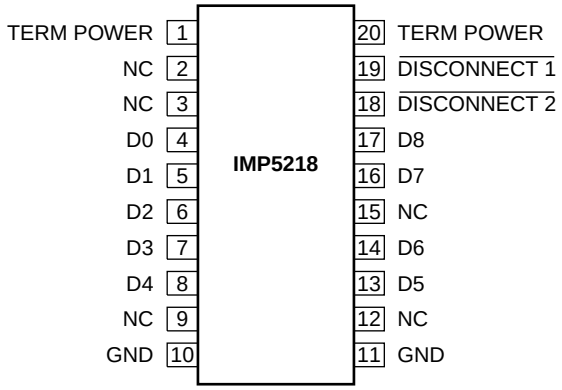

PW Package

5218_02a.eps

Ordering Information

Part Number	Temperature Range	Package
IMP5218CDW	0°C to 125°C	16-pin Plastic SOWB
IMP5218CDWT	0°C to 125°C	Tape and Reel, 16-pin Plastic SOWB
IMP5218CPW	0°C to 125°C	20-pin Plastic TSSOP
IMP5218CPWT	0°C to 125°C	Tape and Reel, 20-pin Plastic TSSOP

5218_t01.at3

Absolute Maximum Ratings[1]

Continuous Termination Voltage 10V
Continuous Output Voltage Range . . . . . 0V to 5.5V
Continuous Disable Voltage Range . . . . . 0V to 5.5V
Operating Junction Temperature . . . . . 0°C to 125°C
Storage Temperature Range . . . . . –65°C to 150°C
Lead Temperature (Soldering, 10 sec.) . . . . . 300°C

Note: 1. Exceeding these ratings could cause damage to the device. All voltages are with respect to Ground. Currents are positive into, negative out of the specified terminal.

Thermal Data

DW Package:
Thermal Resistance Junction-to-Ambient, θ_{JA} . . . . . 95°C / W
PW Package:
Thermal Resistance Junction-to-Ambient, θ_{JA} . . . . . 144°C / W

Junction Temperature Calculation: $T_J = T_A + (P_D \times \theta_{JA})$.
The θ_{JA} numbers are guidelines for the thermal performance of the device / pc-board system. All of the ambient airflow is assumed.

Recommended Operating Conditions[2]

Parameter	Symbol	Min	Typ	Max	Units
Termpwr Voltage	V_{TERM}	3.5		5.5	V
High Level Disable Input Voltage	V_{IH}	2		V_{TERM}	V
Low Level Disable Input Voltage	V_{IL}	0		0.8	V
Operating Junction Temperature Range		0		125	°C

5218_t02.eps

Note: 2. Recommended operating conditions indicate the range over which the device is functional.

Electrical Characteristics

Unless otherwise specified, these specifications apply at an ambient operating temperature of T_A = 25°C. TermPwr = 4.75V. Low duty cycle pulse testing techniques are used which maintain junction and case temperatures equal to the ambient temperature.

Parameter	Symbol	Conditions	Min	Typ	Max	Units
Output High Voltage	V_{OUT}		2.65	2.85		V
TermPwr Supply Current	I_{CC}	All data lines = Open		6	9	mA
		All data lines = 0.5V		215	225	mA
		$\overline{\text{DISCONNECT}}$ Pins 1, 2 = 0V		375		µA
Output Current	I_{OUT}	V_{OUT} = 0.5V	–21	–23	–24	mA
Disable Input Current	I_{IN}	$\overline{\text{DISCONNECT}}$ Pins 1, 2 = 4.75V		90		µA
		$\overline{\text{DISCONNECT}}$ Pins 1, 2 = 0V		–10		µA
Output Leakage Current	I_{OL}	DISCONNECT Pins = 0V, V_O = 0.5V		10		nA
Capacitance in Disabled Mode	C_{OUT}	V_{OUT} = 0V, Frequency = 1MHz		3		pF
Channel Bandwidth	BW			35		MHz
Termination Sink Current, per Channel	I_{SINK}	V_{OUT} = 4V		60		mA

5218_t03.eps

Application Information

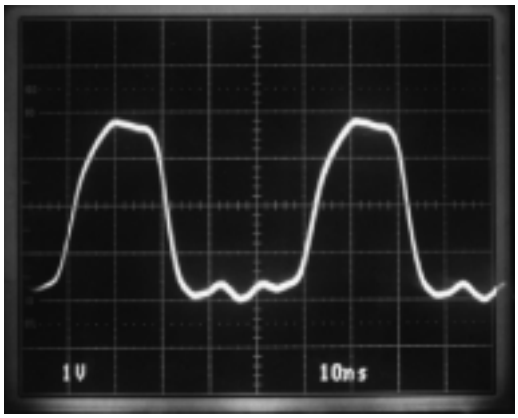

Figure 1. Receiving Waveform – 20MHz

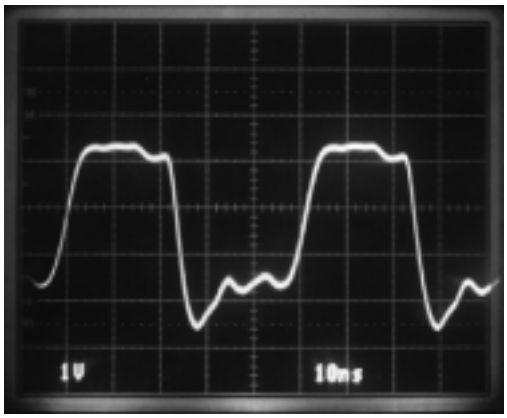

Figure 2. Driving Waveform – 20MHz

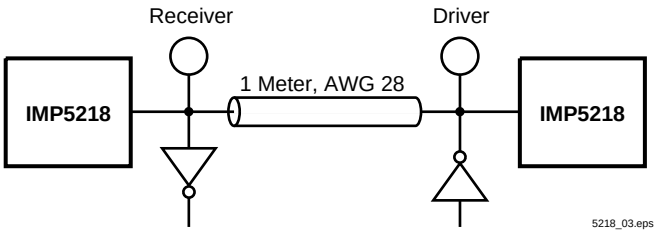

Figure 3.

IMP5218 Maximizes Line Current

Cable transmission theory suggests to optimize signal speed and quality, the termination should act both as an ideal voltage reference when the line is released (deasserted) and as an ideal current source when the line is active (asserted). Common active terminators which consist of linear regulators in series with resistors (typically 110Ω) are a compromise. With coventional linear terminators as the line voltage increases the amount of current decreases linearly by the equation;

$$\frac{(V_{REF} - V_{LINE})}{R} = I.$$

The IMP5218, with its unique new architecture, applies the maximum amount of current regardless of line voltage until the termination high threshold (2.85V) is reached.

Acting as a near ideal line terminator, the IMP5218 closely reproduces the optimum case when the device is enabled. To enable the device the $\overline{\text{Disconnect 1}}$ and $\overline{\text{Disconnect 2}}$ pins must be driven per *Table 1*. When enabled, quiescent current is 6mA and the device will respond to line demands by delivering 24mA on assertion and by imposing 2.85V on de-assertion.

Disable / Sleep Mode

Disable / Sleep mode can be used for power conservation or to remove the terminator from the SCSI chain.

The IMP5218 is disabled when both disconnect pins are driven logic LOW.

Disable mode places the device in a sleep state, where quiescent current is typically 375µA. When disabled, all outputs are in a high impedance state and each output has only 3pF of capacitance.

An additional feature of the IMP5218 is its compatibility with active negation drivers.

Application Information

Table 1. Power Up/ Power Down Function Table

$\overline{\text{DISCONNECT 1}}$	$\overline{\text{DISCONNECT 2}}$	Outputs	Quiescent Current
H	H	Enabled	6mA
H	L	Enabled	6mA
L	H	Enabled	6mA
L	L	Disabled/High Impedance	375µA
Open	Open	Enabled	6mA

5218_t04.eps

Typical Characteristics

Figure 4. Receiving Waveform

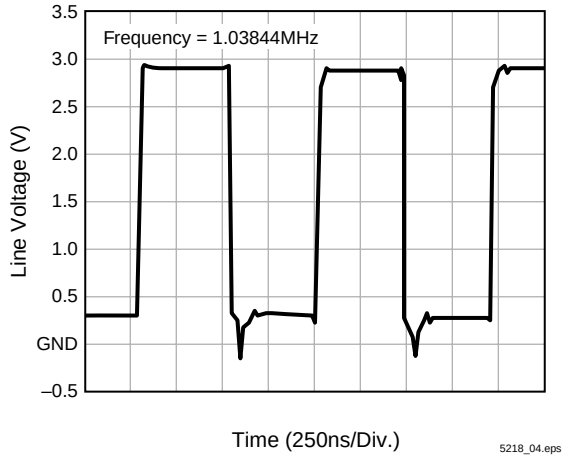

Figure 5. Driving Waveform

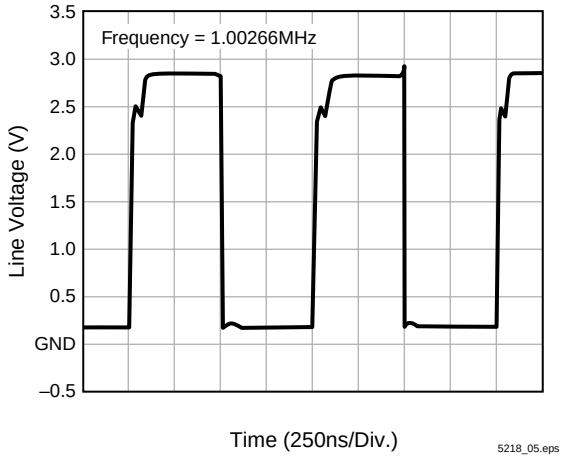

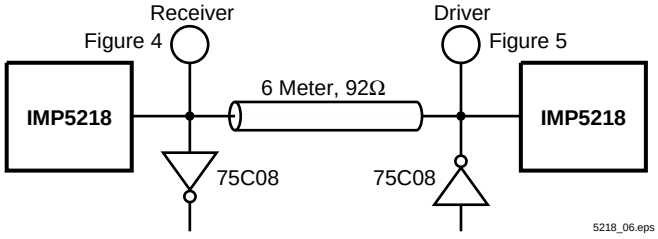

Figure 6. End-Driven Cable

Typical Characteristics

Figure 7. Receiving Waveform

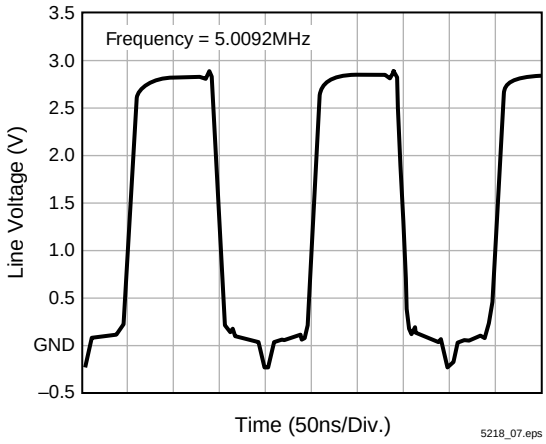

Figure 8. Driving Waveform

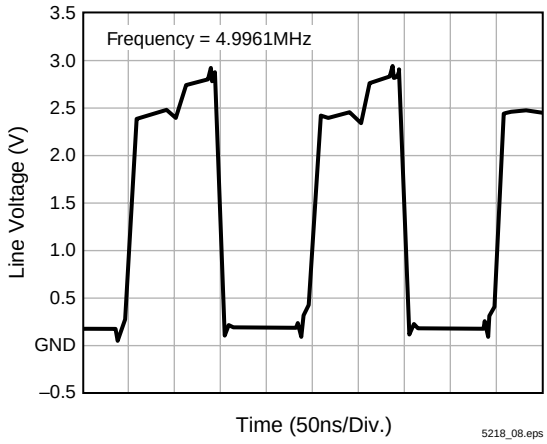

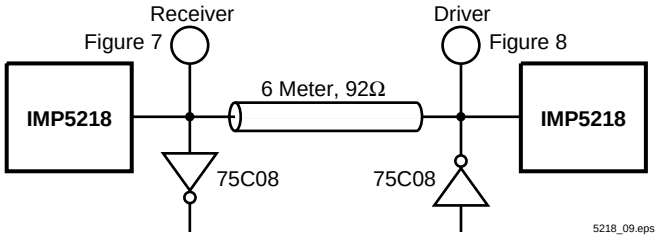

Figure 9. End-Driven Cable

Figure 10. 10MHz Waveform

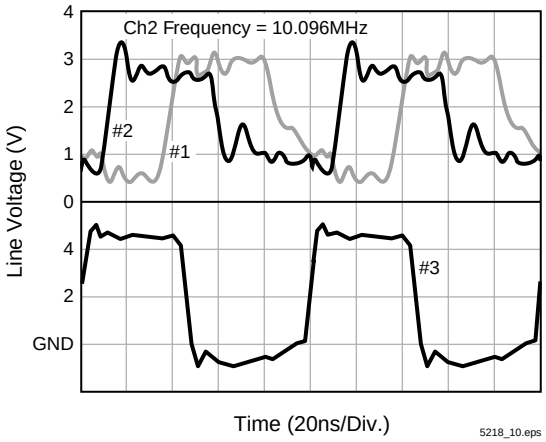

Figure 11. 20MHz Waveform

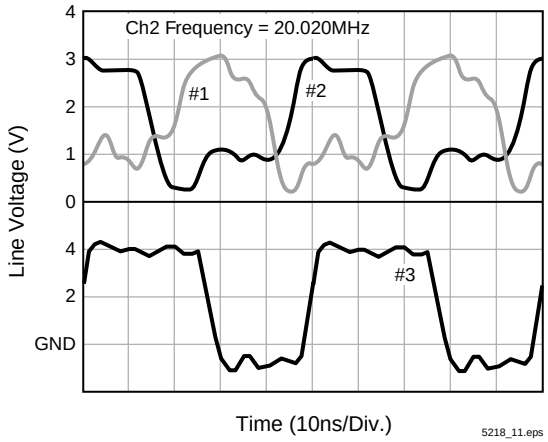

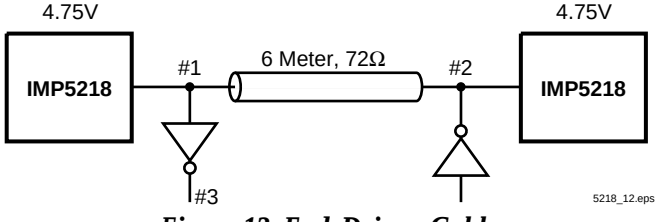

Figure 12. End-Driven Cable

Figure 13. Output High Voltage vs. Junction Temperature

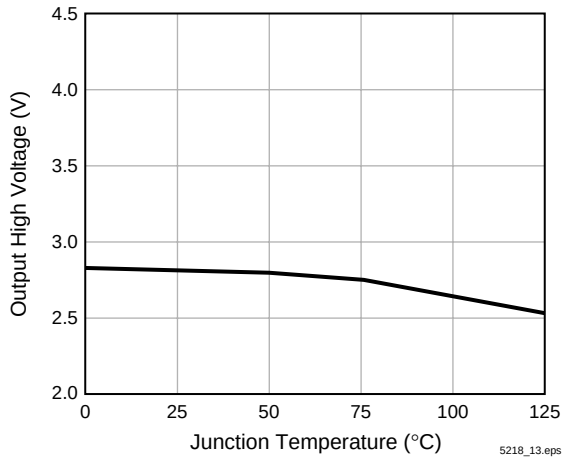

Figure 14. Output Current vs. Junction Temperature

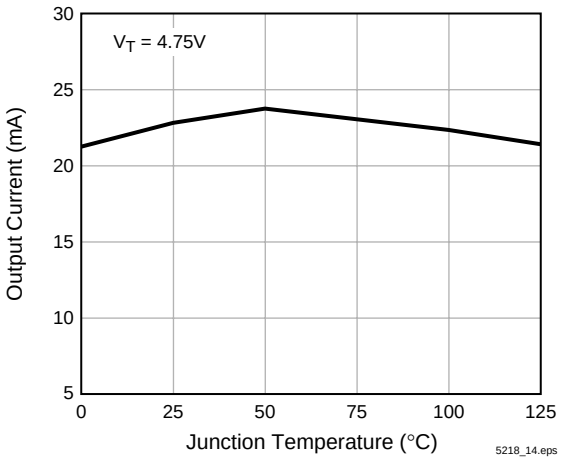

Figure 15. Output Current vs. Output High Voltage

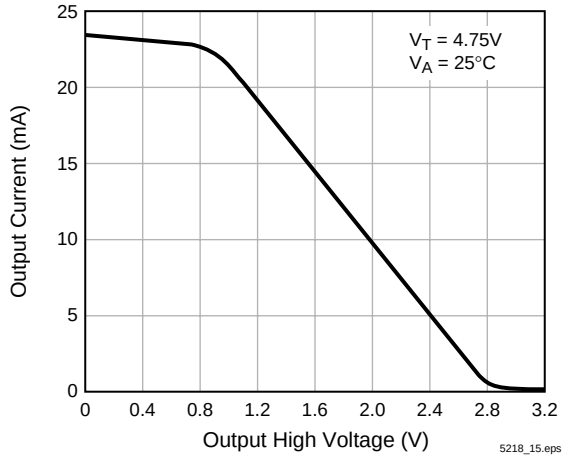

Figure 16. Output Current vs. Output High Voltage

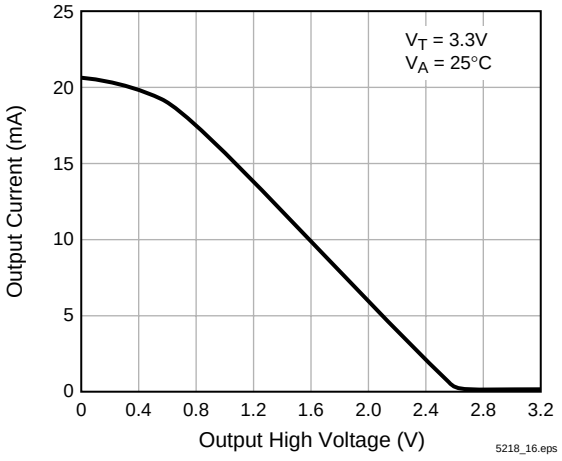

Figure 17. TermPwr Supply Current vs. Termination Voltage

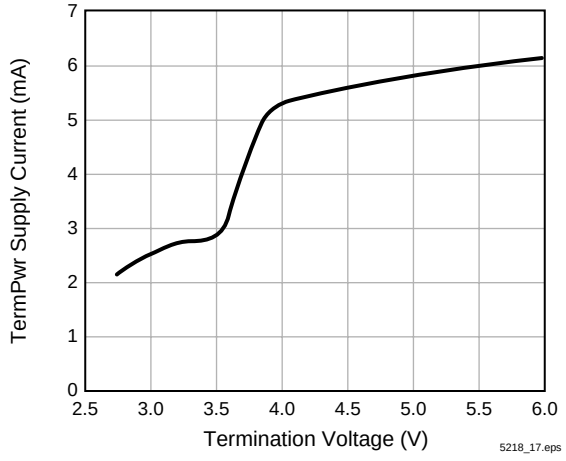

Figure 18. TermPwr Supply Current vs. Termination Voltage (Disabled)

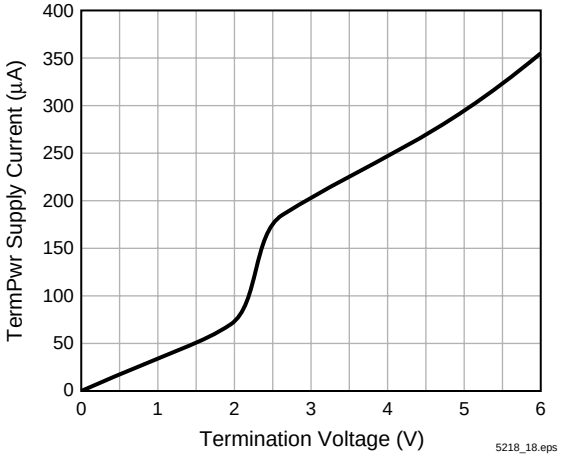

Typical Characteristics

Figure 19. Output High Voltage vs. Junction Temperature

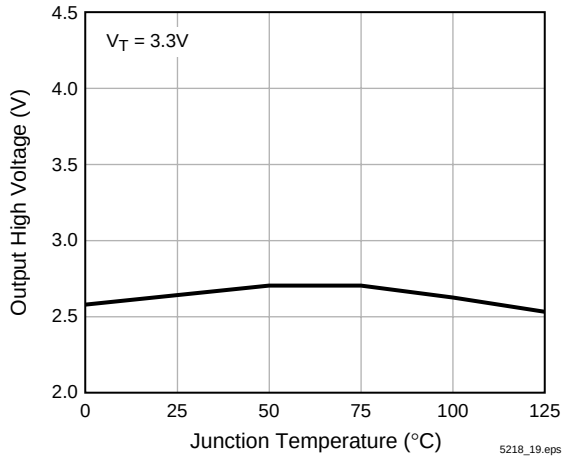

Figure 20. Output Current vs. Junction Temperature

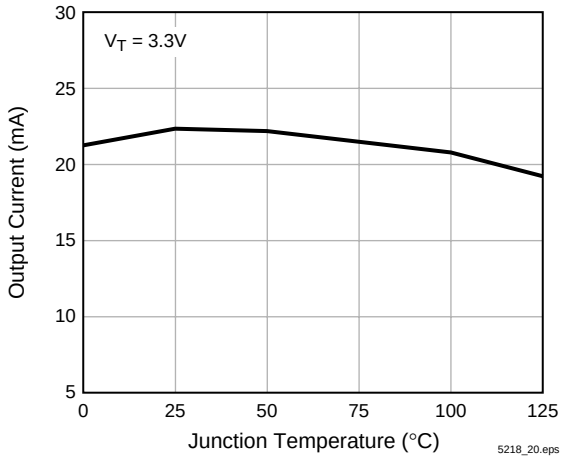

Figure 21. Output High Voltage vs. Termination Voltage

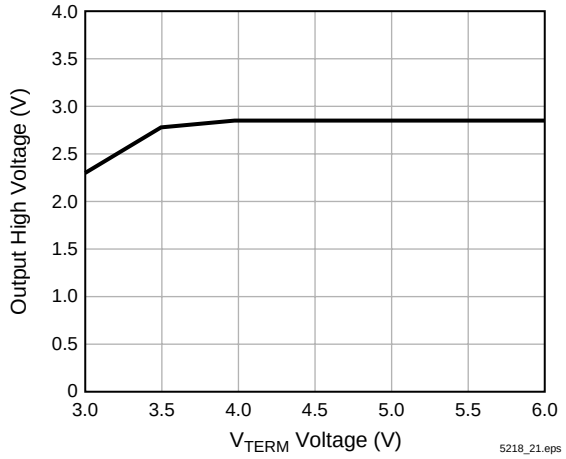

Figure 22. Output Current vs. Termination Voltage

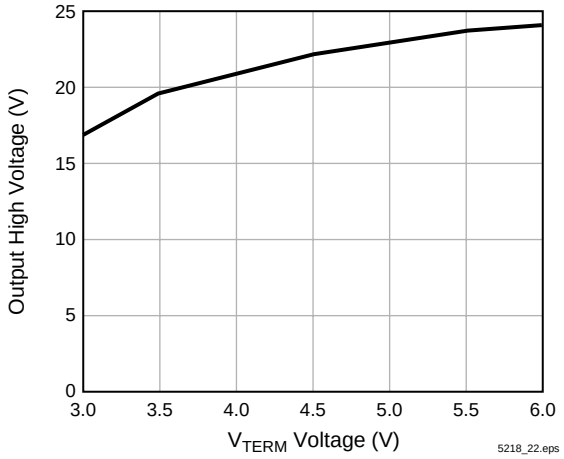

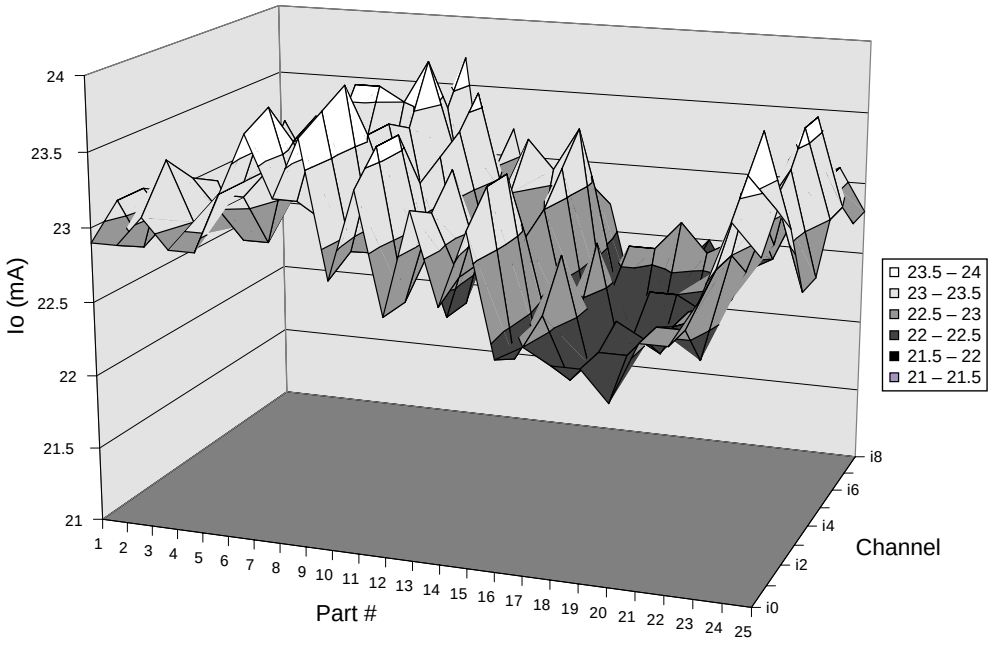

Figure 23. Output Current Matching Channel to Channel

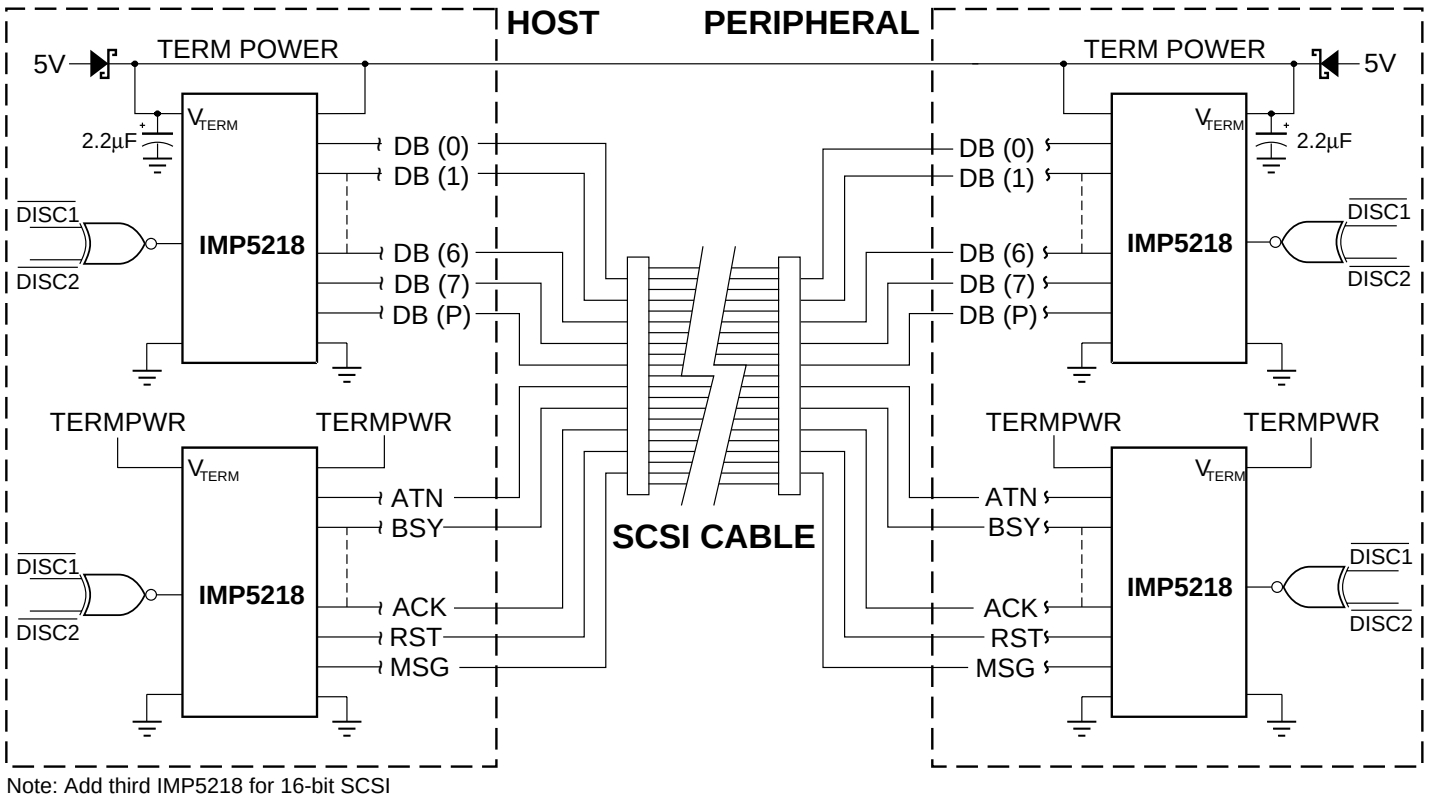

Note: Add third IMP5218 for 16-bit SCSI

Figure 24. 8-Bit SCSI System Application

Package Dimensions

SOWB (16-Pin)

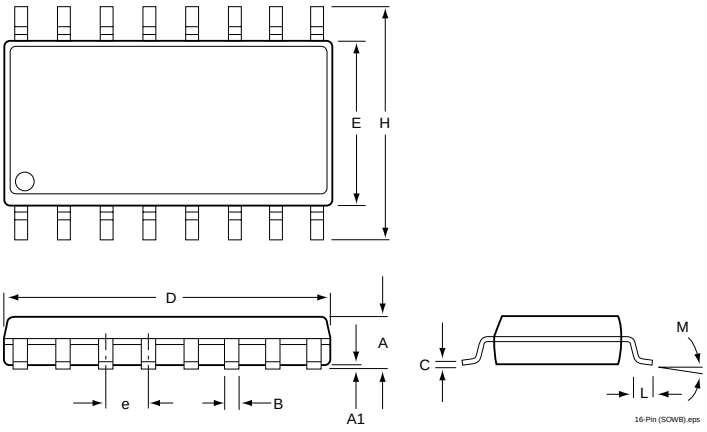

TSSOP (20-Pin)

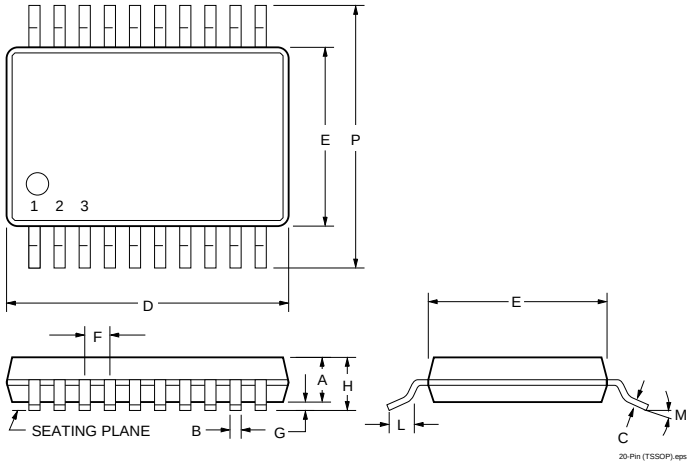

	Inches		Millimeters	
	Min	Max	Min	Max
SOWB (16-Pin)				
A	0.093	0.104	2.35	2.65
A1	0.004	0.012	0.10	0.30
B	0.013	0.020	0.33	0.51
C	0.009	0.013	0.23	0.32
D	0.398	0.413	10.10	10.50
E	0.291	0.299	7.40	7.60
e	0.05 BSC		1.27 BSC	
H	0.394	0.419	10.00	10.65
L	0.016	0.050	0.40	1.27
M	0°	8°	0°	8°
*LC	—	0.004	—	0.10
TSSOP (20-Pin)				
A	0.033	0.037	—	0.90
B	0.007	0.012	0.18	0.30
C	0.0035	0.008	0.90	0.180
D	0.252	0.260	6.40	6.60
E	0.169	0.177	4.30	4.48
F	0.025 BSC		0.65 BSC	
G	0.002	0.005	0.05	0.15
H	—	0.0433	—	1.10
L	0.020	0.028	0.50	0.70
M	0°	8°	0°	8°
P	0.246	0.256	6.25	6.50
*LC	—	0.004	—	0.10

** Lead Coplanarity*

5218_t06.at3

ISO 9001 Registered

Daily Silver IMP Microelectronics Co.,Ltd
7 Keda Road , Hi-Tech Park,
NingBo,Zhejiang, P.R.C.
Post Code : 315040
Tel:(086)-574-87906358
Fax:(086)-574-87908866
e-mail:sales@ds-imp.com.cn
http://www.ds-imp.com.cn

2005 Daily Silver IMP
Revision : A
Issue Date: 08 / 08 / 05
Type: Product

The IMP logo is a registered trademark of Daily Silver IMP.
All other company and product names are trademarks of their respective owners.