tyco Electronics

AXICOM

The Best Relaytion

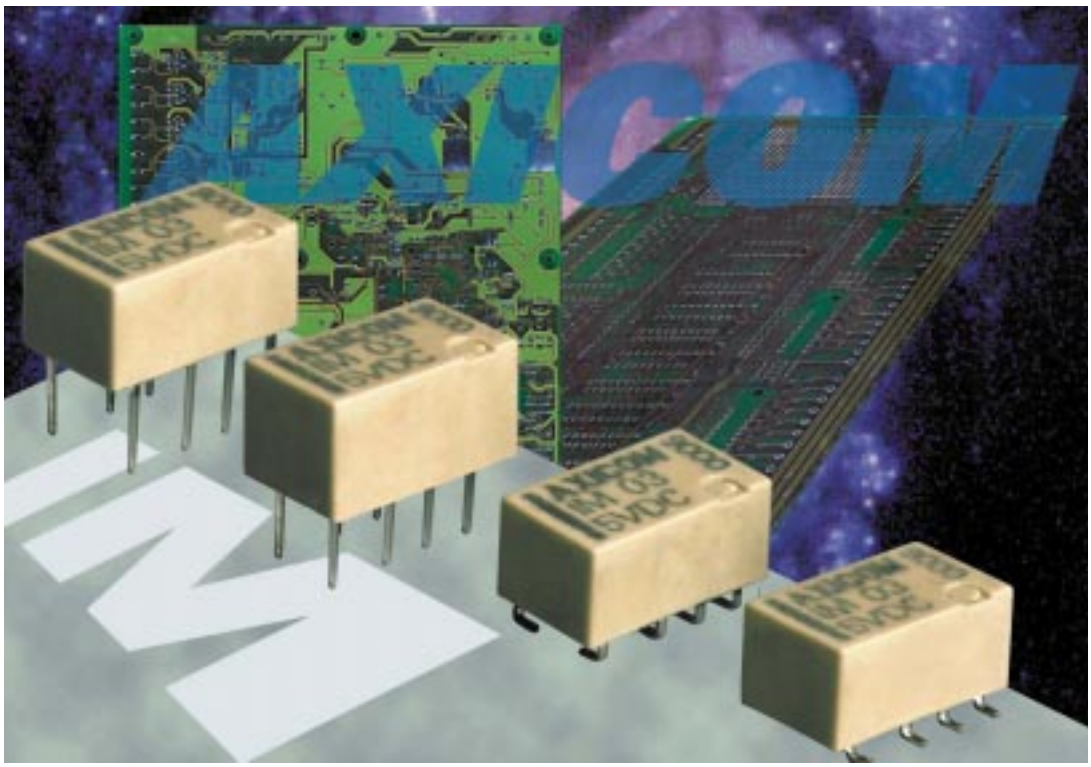

IM Relay

IM Relay

AXICOM

Slim line AND low profile
2 pole telecom/signal relay, polarized
Through Hole Types (THT), standard version
with 5.08 mm, narrow version with 3.2 mm between the terminal rows
or
Surface Mount Type (SMT)

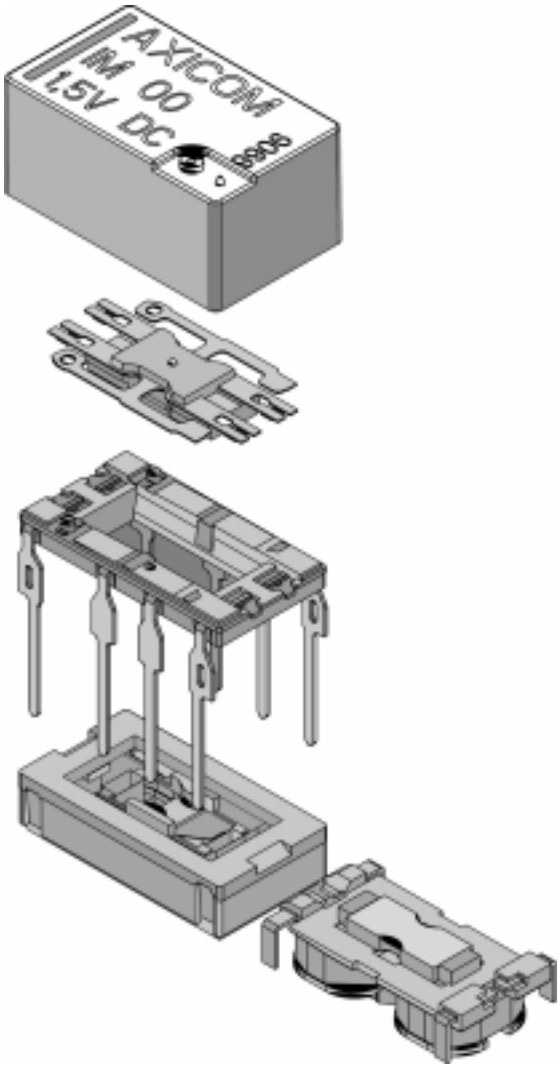

Relay types: non-latching with 1 coil
latching with 1 coil

Features

- Telecom/signal relay (dry circuit, test access, ringing)
- Slim line10 x 6 mm, 0.39 x 0.24 inch
- Low profile 5.65 mm, 0.222 inch
- Minimum board-space 60 mm^2
- Switching current 2 A
- 2 changeover contacts (2 form C / DPDT)
- Bifurcated contacts, gold plated
- High sensitivity results in low nominal power consumption
  140 mW for non latching
  100 mW for latching version
- High surge capability (1.2/50 µs and 10/700 µs) meets Bellcore GR 1089, FCC Part 68 and ITU-T K20
  ≥1500 V between open contacts
  ≥ 2500 V between coil and contacts
- High mechanical shock resistance
  up to 300 G functional
  up to 500 G survival

Typical applications:

- Communications equipment
  Linecard application – analog, ISDN, xDSL,
  PABX
  Voice over IP
- Office and business equipment
- Measurement and control equipment
- Consumer electronics
  Set top boxes, HiFi
- Medical equipment

Options:

Surge capability ≥ 2500 V between open contacts

Insulation category:

Supplementary insulation according IEC/EN 60950 and UL 1950

Working voltage	≤ 300 Vrms
Mains supply voltage	SMT: 250 Vrms THT: 200 Vrms
Repetitive peak voltage	2500 V
Pollution degree:	External: 2 Internal: 1
Flammability classification:	V-0
Maximum operating temperature:	85°C

CSA-C22.2 No. 14-95 File No. 169679-1079886
CSA-C22.2 No. 950-95

UL 508 File No. E111441
UL 1950 3rd ed.

CECC 16501-003

QC 160501-CH0001

IEC/EN60950 IEC Ref. Cert. No. 1176

Dimensions

	IM THT Standard		IM THT Narrow		IM SMT Gull Wings		IM SMT J-Legs	
	mm	inch	mm	inch	mm	inch		
L	10 ±0.08	0.393 ±0.003	10 ±0.08	0.393 ±0.003	10 ±0.08	0.393 ±0.003	10 ±0.08	0.393 ±0.003
W	6 ±0.08	0.236 ±0.003	5.7 ±0.3	0.224 ±0.012	6 ±0.08	0.236 ±0.003	6 ±0.08	0.236 ±0.003
H	5.65 -0.2	0.222 -0.008	5.85 -0.15	0.230 -0.006	5.65 -0.2	0.222 -0.008	5.65 -0.2	0.222 -0.008
T	3.2	0.125	3.2	0.125	N/A	N/A	N/A	N/A
T1	N/A	N/A	N/A	N/A	7.5 ±0.3	0.295 ±0.011	2.8 ±0.2	0.110 ±0.007
T2	5.08±0.1	0.200 ±0.004	3.2±0.1	0.126 ±0.006	5.08 ±0.1	0.200 ±0.004	5.08 ±0.1	0.200 ±0.004
D1	3.2 ±0.15	0.126 ±0.006	3.2 ±0.15	0.126 ±0.006	3.2 ±0.15	0.126 ±0.006	3.2 ±0.15	0.126 ±0.006
D2	2.2 ±0.15	0.087 ±0.006	2.2 ±0.15	0.087 ±0.006	2.2 ±0.15	0.087 ±0.006	2.2 ±0.15	0.087 ±0.006
Tw	0.4	0.015	0.4	0.015	0.4	0.015	0.4	0.015
S	0.3 ±0.05	0.011 ±0.002	0.3 ±0.05	0.011 ±0.002	N/A	N/A	N/A	N/A

THT Version

Standard version

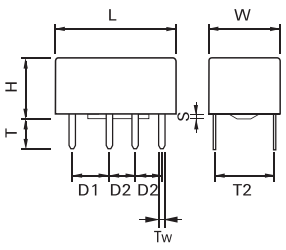

Narrow version

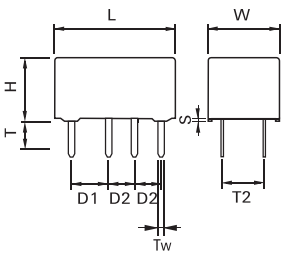

SMT Version

Gull Wings

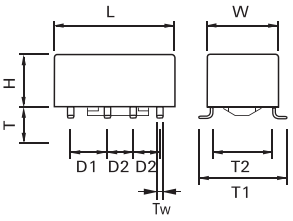

J Legs

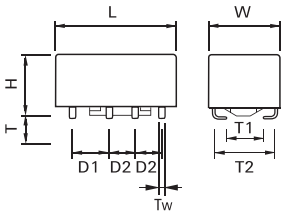

Mounting hole layout

View onto the component side of the PCB
(top view)

Standard version

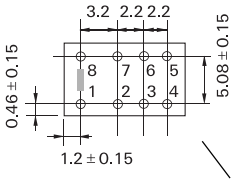

Narrow version

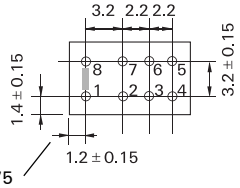

Solder pad layout

View onto the component side of the PCB
(top view)

Gull Wings

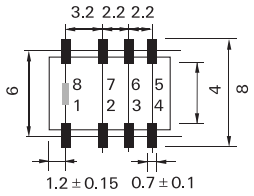

J Legs

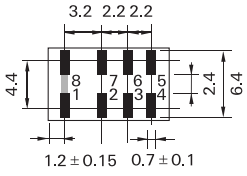

Terminal assignment

Relay - top view

Non-latching type,
not energized condition

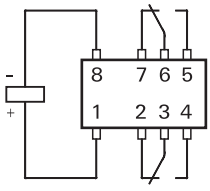

Latching type, 1 coil
reset condition

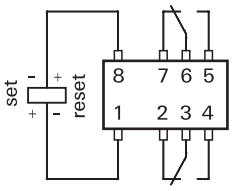

Coil Data (values at 23°C)

Nominal voltage *U*nom	Operate/set voltage range		Release/ reset voltage	Nominal power consumption	Resistance	Relay code
	Minimum voltage U_I	Maximum voltage U_{II}	Minimum			
Vdc	Vdc	Vdc	Vdc	mW	Ω / ± 10 %	
non-latching 1 coil						
1.5	1.13	3.4	0.15	140	16	IM00
3	2.1	6.8	0.30	140	64	IM01
4.5	3.15	10.3	0.45	140	145	IM02
5	3.5	11.4	0.50	140	178	IM03
6	4.2	13.7	0.60	140	257	IM04
9	6.3	20.4	0.90	140	574	IM05
12	8.4	27.3	1.20	140	1028	IM06
24	16.8	45.6	2.40	200	2880	IM07
latching 1 coil						
1.5	1.13	4.1	- 1.13	100	23	IM40
3	2.25	8.1	- 2.25	100	90	IM41
4.5	3.38	12.1	- 3.38	100	203	IM42
5	3.75	13.5	- 3.75	100	250	IM43
6	4.5	16.2	- 4.50	100	360	IM44
9	6.75	24.2	- 6.75	100	810	IM45
12	9.00	32.3	- 9.00	100	1440	IM46
24	18.00	41.9	- 18.00	200	2880	IM47

Further coil versions are available on request.

U_I = Minimum voltage at 23° C after pre-energizing with nominal voltage without contact current

U_{II} = Maximum continous voltage at 23°

The operating voltage limits U_I and U_{II} depend on the temperature according to the formula:

$U_{I\,tamb} = K_I \cdot U_{I\,23°C}$ and

$U_{II\,tamb} = K_{II} \cdot U_{II\,23°C}$

t_{amb} = Ambient temperature

$U_{I\,tamb}$ = Minimum voltage at ambient temperature, t_{amb}

$U_{II\,tamb}$ = Maximum voltage at ambient temperature, t_{amb}

k_I, k_{II} = Factors (dependent on temperature), see diagram

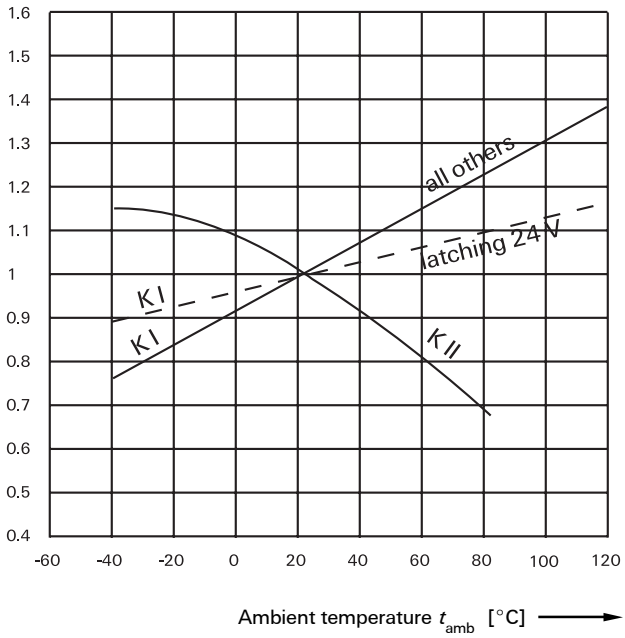

Contact Data

Number of contacts and type	2 changeover contacts
Contact assembly	Bifurcated contacts
Contact material	Palladium-ruthenium, gold-covered
Limiting continuous current at max. ambient temperature	2 A
Maximum switching current	2 A
Maximum swichting voltage	220 Vdc 250 Vac
Maximum switching capacity	60 W, 62.5 VA
Thermoelectric potential	< 10 μV
Initial contact resistance / measuring condition: 10 mA / 20 mV	< 50 mΩ
Electrical endurance at contact application 0	
($\leq$ 30 mV / $\leq$ 10 mA)	min. 2.5 x 10^6 operations
cable load open end	min. 2.0 x 10^6 operations
Resistive load at 125Vdc / 0.24 A - 30 W	min. 5 x 10^5 operations
at 220 Vdc / 0.27 A - 60 W	min. 1 x 10^5 operations
at 250 Vac / 0.25 A - 62.5 VA	min. 1 x 10^5 operations
at 30 Vdc / 1 A - 30 W	min. 5 x 10^5 operations
at 30 Vdc / 2 A - 60 W	min. 1 x 10^5 operations
Mechanical endurance	typ. 10^8 operations
UL/CSA ratings	30 Vdc / 2 A 220 Vdc / 0.27 A 120 Vdc / 0.5 A 250 Vac / 0.25 A

Insulation

	Standard Version	High Dielectric Version
Insulation resistance at 500 VDC	> 10^9 Ω	> 10^9 Ω
Dielectric test voltage (1 min)		
between coil and contacts	1800 Vrms	1800 Vrms
between adjacent contact sets	1000 Vrms	1800 Vrms
between open contacts	1000 Vrms	1500 Vrms
Surge voltage resistance		
according to Bellcore TR-NWT-001089 (2 / 10 μs)		
between coil and contacts	2500 V	2500 V
between adjacent contact sets	1500 V	2500 V
between open contacts	1500 V	2500 V
according to FCC 68 (10 / 160 μs)		
between coil and contacts	2500 V	2500 V
between adjacent contact sets	1500 V	2500 V
between open contacts	1500 V	2500 V

High Frequency Data

Capacitance	
between coil and contacts	max. 2 pF
between adjacent contact sets	max. 2 pF
between open contacts	max. 1 pF
RF Characteristics	
Isolation at 100 / 900 MHz	- 37.0 dB / - 18.8 dB
Insertion loss at 100 / 900 MHz	- 0.03 dB / - 0.33 dB
V.S.W.R. at 100 / 900 MHz	1.06 / 1.49

* High Dielectric Version „C“

General data

Operate time at U_{nom} typ. / max.	1 ms / 3 ms
Reset time (latching) at U_{nom} , typ. / max.	1 ms /3 ms
Release time without diode in parallel (non-latching), typ. / max.	1 ms / 3 ms
Release time with diode in parallel (non-latching), typ. / max.	3 ms / 5 ms
Bounce time at closing contact, typ. / max.	1 ms / 5 ms
Maximum switching rate without load	50 operations/s
Ambient temperature	-40° C ... +85° C
Thermal resistance	< 150 K/W
Maximum permissible coil temperature	125° C
Vibration resistance (function)	20 G 10 to 1000 Hz
Shock resistance, half sinus, 11 ms half sinus, 0.5 ms	50 G (function) 500 G (damage)
Degree of protection	immersion cleanable, IP 67
Needle flame test	application time 20 s, no burning and glowing
Mounting position	any
Processing information	Ultrasonic cleaning is not recommended
Weight (mass)	max. 0.75 g
Resistance to soldering heat	260° C / 10 s

All data refers to 23° C unless otherwise specified.

Recommended soldering conditions

Soldering conditions according CECC 00802

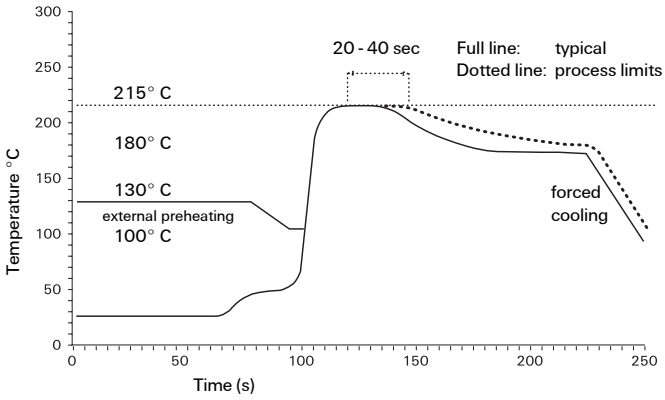

Vapor Phase Soldering: Temperature/Time Profile
(Lead Temperature)

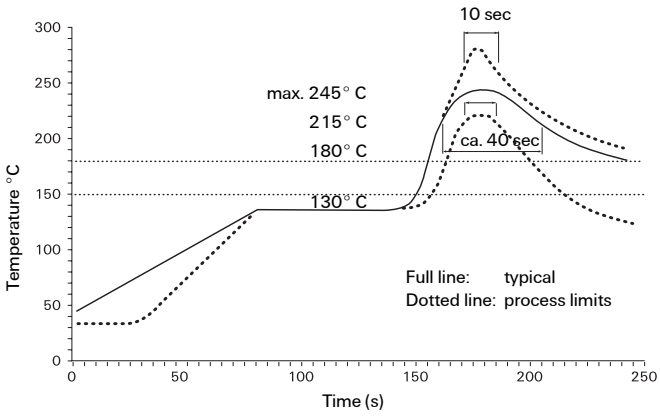

Infrared Soldering: Temperature/Time Profile
(Lead Temperature)

Packing

Dimensions in mm

Tube for THT version - 50 relays per tube, 1000 relays per box

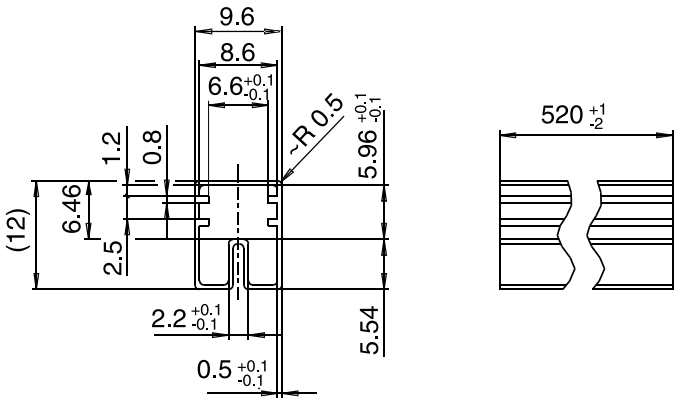

Tape and reel for SMT version - 1'000 relays / reel, 1'000 or 5'000 relays / box

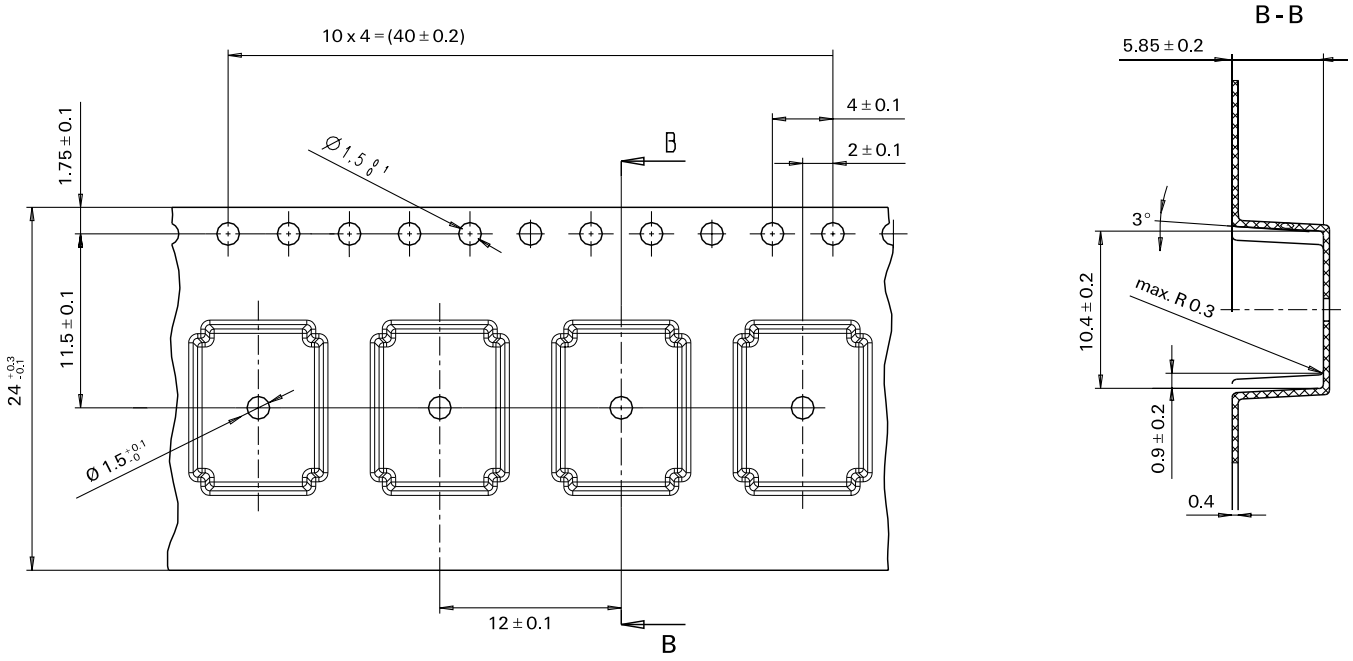

Reel dimension

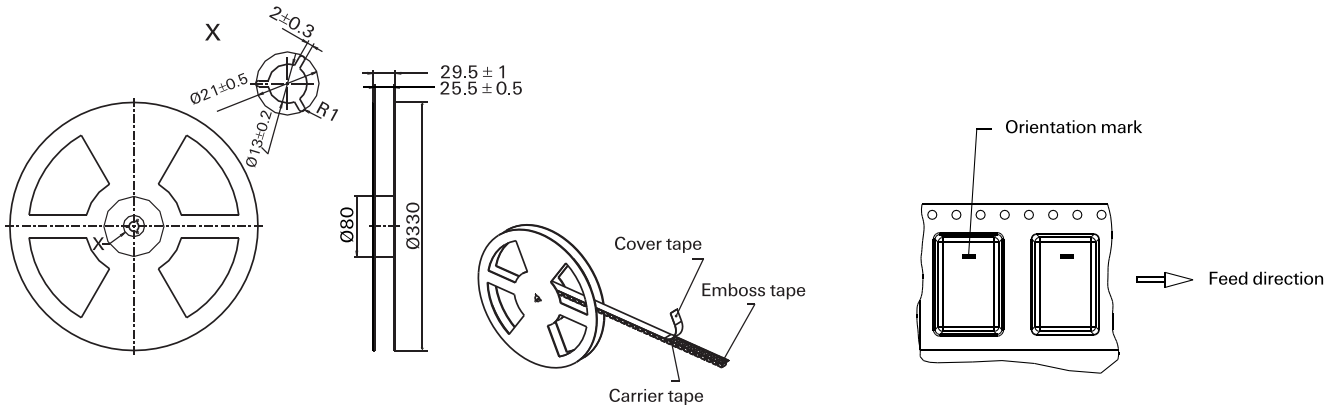

Ordering Information

Relay Code	Tyco Part Number	Relay Code	Tyco Part Number
IM00GR	3-1462037-7	IM07TS	3-1462037-0
IM00JR	3-1462037-9	IM07NS	1-1462038-7
IM00TS	3-1462037-5	IM40GR	5-1462037-1
IM00NS	1-1462038-0	IM40JR	5-1462037-2
IM01GR	0-1462037-1	IM40TS	5-1462037-0
IM01CGR	0-1462038-4	IM40NS	1-1462038-8
IM01JR	4-1462037-0	IM41GR	5-1462037-4
IM01TS	0-1462037-4	IM41JR	5-1462037-5
IM01NS	1-1462038-1	IM41TS	5-1462037-3
IM02GR	0-1462037-9	IM41NS	1-1462038-9
IM02CGR	0-1462038-1	IM42GR	3-1462037-1
IM02JR	1-1462037-1	IM42JR	5-1462037-7
IM02TS	1-1462037-3	IM42TS	5-1462037-6
IM02NS	1-1462038-2	IM42NS	2-1462038-0
IM03GR	1-1462037-4	IM43GR	5-1462037-9
IM03CGR	0-1462038-2	IM43JR	6-1462037-0
IM03JR	1-1462037-6	IM43TS	5-1462037-8
IM03TS	1-1462037-8	IM43NS	2-1462038-1
IM03NS	1-1462038-3	IM44GR	6-1462037-2
IM04GR	4-1462037-2	IM44JR	6-1462037-3
IM04JR	4-1462037-4	IM44TS	6-1462037-1
IM04TS	4-1462037-1	IM44NS	2-1462038-2
IM04NS	1-1462038-4	IM45GR	6-1462037-4
IM05GR	3-1462037-4	IM45JR	6-1462037-5
IM05CGR	0-1462038-3	IM45TS	3-1462037-2
IM05JR	4-1462037-5	IM45NS	2-1462038-3
IM05TS	2-1462037-2	IM46GR	6-1462037-7
IM05NS	1-1462038-5	IM46JR	6-1462037-8
IM06GR	2-1462037-3	IM46TS	6-1462037-6
IM06CGR	9-1462037-9	IM46NS	2-1462038-4
IM06JR	4-1462037-6	IM47GR	7-1462037-0
IM06TS	2-1462037-7	IM47JR	7-1462037-1
IM06NS	1-1462038-6	IM47TS	6-1462037-9
IM07GR	4-1462037-7	IM47NS	2-1462038-5
IM07JR	4-1462037-8		

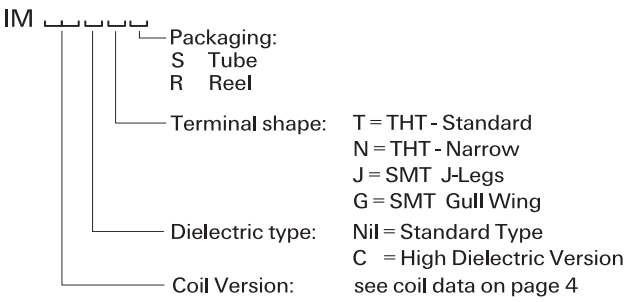

IM Relays

4th generation slim line – low profile polarized 2 c/o telecom relay with bifurcated contacts, available as non latching or latching relay with 1 coil. Nominal voltage range from 1.5... 24 V, coil power consumption of 140... 200 mW, latching relays with 1 coil 100 mW. The IM relay is available as through hole and surface mount type (J-Legs and Gull Wings) and capable to switch loads up to 60 W/62,5 VA. Dielectric strength fulfills the Bellcore requirements according GR 1089 (2,5 kV – 2 / 10 µs) and FCC part 68 (1,5 kV – 10 / 160 µs). The IM is CECC/ IECQ approved and certified in accordance with IEC/EN 60950 and UL1950. Dimensions approx. 10 x 6 mm board space and 5.65 mm height.

P2 Relays

3rd generation polarized 2 c/o telecom relay with bifurcated contacts, available as non latching or latching relay with 1 or 2 coils. Nominal voltage range from 3 ... 24 V, coil power consumption 140 mW, latching relays with 1 coil 70 mW. The P2 relay is available as through hole or surface mount type and capable to switch currents up to 5 A. Dielectric strength fulfills the Bellcore requirements according GR 1089 (2,5 kV – 2 / 10 µs) and FCC part 68 (1,5 kV – 10 / 160 µs). Dimensions approx. 15 x 7,5 mm board space and 10 mm height.

FX Relays

3rd generation polarized 2 c/o telecom relay with bifurcated contacts, available as non latching or latching relay with 1 coil. Nominal voltage range from 3 ... 48 V, coil power consumption of 80 ... 260 mW for the high sensitive version, 140... 300 mW for the standard version, latching relays with 1 coil 100 mW. The FX2 relay is available as through hole type and capable to switch loads up to 60 W/62,5 VA. Dielectric strength fulfills the Bellcore requirements according GR 1089 (2,5 kV – 2 / 10 µs) and FCC part 68 (1,5 kV – 10 / 160 µs). The FX2 is CECC/IECQ approved and certified in accordance with IEC/EN 60950 and UL1950. Dimensions approx. 15 x 7,5 mm board space and 10,7 mm height.

FT2 / FU2 Relays

3rd generation non polarized, non latching 2 c/o telecom relay with bifurcated contacts. Nominal voltage range from 3 ... 48 V, coil power consumption 200 ... 300 mW. Most sensitive 48 V relay. Available as through hole and surface mount type. Dielectric strength fulfills the Bellcore requirements according GR 1089 (2,5 kV – 2 / 10 µs) and FCC part 68 (1,5 kV – 10 / 160 µs). The FT2/FU2 is CECC/IECQ approved and certified in accordance with IEC/EN 60950 and UL1950. Dimensions approx. 15 x 7,5 mm board space and 10 mm height.

FP2 Relays

3rd generation polarized 2 c/o telecom relay with bifurcated contacts, available as non latching or latching relay with 1 or 2 coils. Nominal voltage range from 3 ... 48 V, coil power consumption of 80 ... 260 mW for the high sensitive version, 140... 300 mW for the standard version, latching relays with 1 coil 100 mW.. The FP2 relay is available as through hole type and capable to switch loads up to 30 W/62,5 VA. Dielectric strength fulfills FCC part 68 (1,5 kV – 10 / 160 µs). The FP2 is CECC/IECQ approved. Dimensions approx. 14 x 9 mm board space and 5 mm height.

MT2 / MT4

2nd generation non polarized, non latching 2 c/o and 4 c/o telecom and signal relay with bifurcated contacts. Nominal voltage range from 4.5 ... 48 V, coil power consumption 150/200/300/400 and 550 mW, and 300 mW (MT4). Dielectric strength fulfills the requirements according FCC part 68 (1,5 kV – 10 / 160 µs) for both and the Bellcore requirements according GR 1089 (2,5 kV – 2 / 10 µs) the MT4 only.
Dimensions MT2 approx. 20 x 10 mm board space and 11 mm height, MT4 approx. 20 x15 mm board space and 11 mm height.

D2n Relays

2nd generation non polarized 2 c/o relay for telecom and various other applications. Nominal voltage range from 3 ... 48 V, coil power consumption from 150 .... 500 mW. The D2n relay is capable to switch currents up to 3 A. Dielectric strength fulfills the requirements according FCC part 68 (1,5 kV – 10 / 160 µs). Dimensions approx. 20 x10 mm board space and 11,5 mm height.

P1 Relays

Extremely sensitive, polarized 1 c/o relay with bifurcated contacts for a wide range of applications, available as non latching or latching relay with 1 or 2 coils. Nominal voltage range from 3 ... 24 V, coil power consumption 65 mW, latching relays with 1 coil 30 mW. The P1 relay is available as through hole or surface mount type and capable to switch currents up to 1 A. Dielectric strength fulfills the requirements according FCC part 68 (1,5 kV – 10 / 160 µs). Dimensions approx. 13 x 7,6 mm board space and 7 mm height for THT or 8 mm height for SMT version.

W11 Relays

Low cost, non polarized 1 c/o relay for various applications. Nominal voltage range from 3 ... 24 V, coil power consumption 450 mW, sensitive versions 200 mW. The W11 relay is capable to switch currents up to 3 A. Dielectric strength 1000 Vrms. Dimensions approx. 15,6 x 10,6 mm board space and 11,5 mm height.

Reed Relays

High sensitive, non polarized relay for telecom and various other applications, available with 1 n/o, 2 n/o or 1c/o contacts. Nominal voltage range from 5 ... 24 V, coil power consumption 50...280 mW for 1 n/o and 125 ... 280 mW for 2 n/o or 1 c/o versions. Reedrelays are available in DIP or SIL housing and capable to switch currents up to 0,5 A. Integrated diode and/or electrostatic shield optional. Dielectric strength 1500 Vdc. Dimensions approx. 19,3 x 7 mm board space and 5 ... 7,5 mm height for DIP or 19,8 x 5 mm board space and 7,8 mm height for SIL version.

Cradle Relays

Extremely reliable and mature relay family of 1st generation for various signal switching applications. Available as non polarized, polarized / latching and relay with AC coil. The benefit is the possibility of combining various contact sets from 1 up to 6 poles, single and bifurcated contacts, different contact materials with a coil voltage range from 1,5 Vdc to 220 Vac. Cradle relays are available as dust protected and hermetically sealed versions, with plug in or solder terminals and are capable to switch currents up to 5 A. Forcibly guided (linked) contact sets optional. Dielectric strength 500 Vrms. Dimensions from approx. 19 x 24 to 19x35 mm board space and 30 mm height.

Other Relays

We offer a variety of different relay families for maintenance and replacement purposes. These relays are up to 60 years old now, such as Card Relay SN (V23030 / V23031 series), Small General Purpose Relay (V23006 series), Small Polarized Relay (V23063 ... V23067 and V23163 ... V23167 series). Accessories like sockets, hold down springs, etc. optional.



Tyco Electronics AXICOM Ltd.
Seestrasse 295 - P.O. Box 220
CH-8804 Au-Wädenswil / Switzerland
Phone +41 1 782 9111
Fax +41 1 782 9080
E-mail: axicom@tycoelectronics.com



Tyco Electronics AMP GmbH
Paulsternstrasse 26
D-13629 Berlin / Germany
Phone +49 30 386 38260
Fax +49 30 386 38569
E-mail: axicom@tycoelectronics.com



Tyco Electronics EC Trutnov s.r.o.
Komenského 821
CZ-541 01 Trutnov / Czech Republic
E-mail: axicom@tycoelectronics.com

Tyco Electronics Corporation
POB 3608,
Harrisburg, PA 17105, USA
Phone +1 800-522-6752

April 2002 Rev. 3.01