Interface Transceiver of the Serial Data of RS-232 Standard

ILX3221

DESCRIPTION

The ILX3221 is interface transceiver of serial data under RS - 232 standard with single power supply source & bipolar output voltage of transmitter, low power consumption.

The ILX3221 is purposed for application in modern high efficient calculating systems with the wide range of supply voltage, fast-operating electronic devices with high level of fidelity of information exchange among distant devices. The chip is designed in 16-pin SSOP and TSSOP package.



SSOP-16



TSSOP-16

Fig.1

T_A= from -40 to 85 °C
for all packages

FEATURES

- 1 transmitter and 1 receivers of the serial data of the standard RS-232;
- Auto Shutdown function provide low power consumption;
- Supply voltage range: 3.0 … 5.5 V;
- Operating temperature range: -40 … +85 °C;
- ESD protection up to 2000 V for transmitter input and receiver output (TTL/CMOS levels) and up to 15000V for transmitter output and receiver input (RS-232 levels);
- Latch current, min – 100 mA at normal climatic condition.

ORDERING INFORMATION

Device	Operating Temperature Range	Package	Shipping
ILX3221ESD	T_A = -40° to 85° C	SSOP-16	Tube
ILX3221ESDT		SSOP-16	Taping
ILX3221ETSD		TSSOP-16	Tube
ILX3221ETSDT		TSSOP-16	Taping

PIN CONFIGURATION

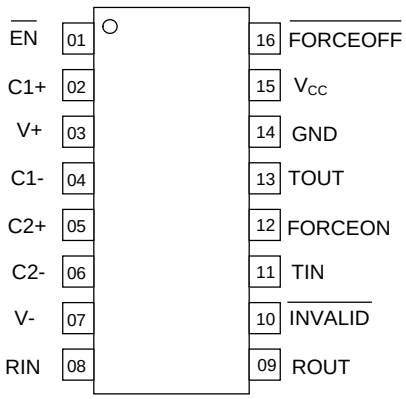

Fig.2

Table. 1 **PIN DESCRIPTION**

Pin number	Symbol	Pin description
01	$\overline{EN}$	Receiver enable control input
02	C1+	Positive terminal of the voltage multiplier charge-pump capacitor
03	V+	Positive voltage multiplier output
04	C1-	Negative terminal of the voltage multiplier charge-pump capacitor
05	C2+	Positive terminal of the voltage multiplier charge-pump capacitor
06	C2-	Negative terminal of the voltage multiplier charge-pump capacitor
07	V-	Negative voltage multiplier output
08	RIN	RS-232 Receiver data inputs
09	$\overline{ROUT}$	TTL/CMOS Receiver data output
10	$\overline{INVALID}$	Output of the valid signal detector. Indicates if a valid RS-232 level is present on receiver inputs logic “1”.
11	TIN	TTL/CMOS transmitter data input
12	FORCEON	Autoshutdown mode control input (enable active operation of the IC)
13	$\overline{TOUT}$	RS-232 transmitter data outputs
14	GND	Common pin
15	Vcc	Supply voltage
16	$\overline{FORCEOFF}$	Autoshutdown mode control input (switch the IC to low power consumption mode)

Functional diagram

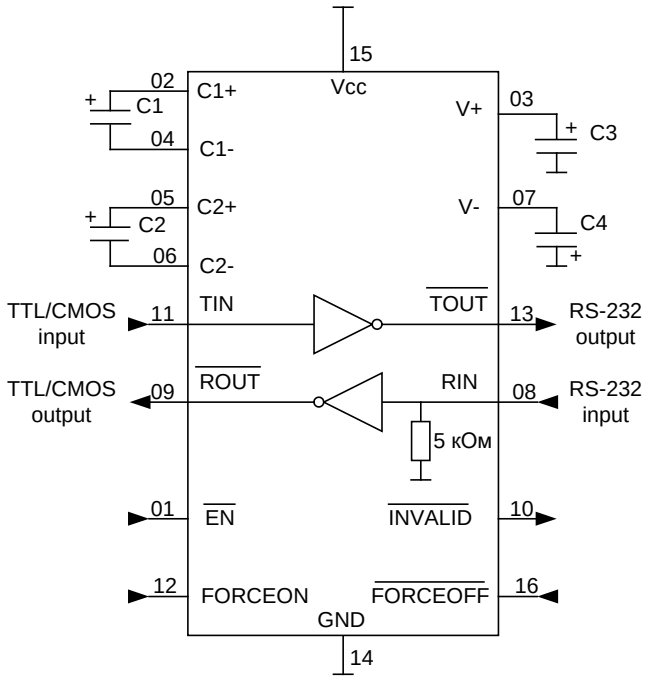

C1 – capacitor 0.1 μF ± 10 % for VCC = 3.0 … 3.6V and
0.047 μF ± 10 % for VCC = 4.5 … 5.5V
C2, C3, C4– capacitors 0.1 μF ± 10 % for VCC = 3.0 … 3.6V and
0.33 μF ± 10 % for VCC = 4.5 … 5.5V

Fig. 3 - Functional diagram

Table 2. Truth table

Mode	Inputs					Outputs	
	FORCEON	$\overline{\text{FORCEOFF}}$	$\overline{\text{EN}}$	RIN	TIN	$\overline{\text{ROUT}}$	$\overline{\text{TOUT}}$
Low power consumption (without Autoshutdown function)	X	L	L	L	X	H	Z
	X	L	L	H	X	L	Z
	X	L	H	X	X	Z	Z
Data transfer (without Autoshutdown function)	H	H	L	L	L	H	H
	H	H	L	L	H	H	L
	H	H	L	H	L	L	H
	H	H	L	H	H	L	L
	H	H	H	X	L	Z	H
	H	H	H	X	H	Z	L
Data transfer (with Autoshutdown function)	L	H	L	L	L	H	H
	L	H	L	L	H	H	L
	L	H	L	H	L	L	H
	L	H	L	H	H	L	L
	L	H	H	X	H	Z	L
	L	H	H	X	L	Z	H
Low power consumption (with Autoshutdown function)	L	H	L	L_{INVL}	X	H	Z
	L	H	H	L_{INVL}	X	Z	Z

Note: H – high level;
L – low level;
X – any level (H or L);
L_{INVL} – low level signal not less than -0.3 V & not more than 0.3 V with duration not less that t_{PHLINV};
Z – third state of output

Table 3. Truth table for $\overline{\text{INVALID}}$ pin

RIN	$\overline{\text{INVALID}}$
L	H
H	H
L_{INVL}	L

Note: H – high level;
L – low level;
L_{INVL} – low level signal not less than -0.3 V & not more than 0.3 V with duration not less that t_{PHLINV};

Table 4. – Maximum Ratings

Symbol	Parameter	Norm		Unit
		min	max	
V_{CC}	Supply voltage	–0.3	6.0	V
V_{IL}	Transmitter low level input voltage	–0.3	–	V
V_{IH}	Transmitter high level input voltage	–	6.0	V
V_{OT}	Voltage applied to transmitter output	– 13.2	13.2	V
V_{OR}	Receiver output voltage	–0.3	V_{CC} + 0.3	V
V_O	$\overline{\text{INVALID}}$ pin voltage	–0.3	V_{CC} + 0.3	V
$V_{V+} + V_V$-	Multiplier outputs voltages difference	–	13	V
V_{V+}	Multiplier positive output voltage, V	–0.3	7.0	V
V_V-	Multiplier negative output voltage, V	–7.0	0.3	V
V_{IR}	Receiver input voltage, V	–25	25	V
T	Ambient temperature	–60	150	°C

* Stresses beyond those listed under “absolute maximum ratings” may cause permanent damage to the device.
These are stress ratings only and functional operation of the device at these or any other conditions beyond those indicated under “recommended operating conditions” is not implied.
Exposure to absolute-maximum-rated conditions for extended periods may affect device reliability.

Table 5 – Recommended Operating Conditions

Symbol	Parameter	Norm		Unit
		min	max	
V_{CC}	Supply voltage	3.0	5.5	V
V_{IL}	Transmitter low level input voltage	0	0.8	V
V_{IH}	Transmitter high level input voltage			V
	- for V_{CC} = 3.3 V ± 10 %	2.0	V_{CC}	
	- for V_{CC} = 5.0 V ± 10 %	2.4		
V_{INVL}	Receiver threshold input voltage corresponding to low level on $\overline{\text{INVALID}}$ pin	–0.3	0.3	V
V_{INVH}	Receiver threshold input voltage corresponding to high level on $\overline{\text{INVALID}}$ pin	–2.7	2.7	V
V_{ITH}	Receiver high level threshold input voltage,	–	2.4	V
V_{ITL}	Receiver low level threshold input voltage			V
	for V_{CC} = 3.3 V ± 10 %	0.6	–	
	for V_{CC} = 5.0 V ± 10 %	0.8		
V_{V+}	Multiplier positive output voltage, V	5.0	–	V
V_V-	Multiplier negative output voltage, V	–	–5.0	V
V_{IR}	Receiver input voltage, V	–25	25	V
T	Ambient temperature	–40	85	°C

Table 6 – Electric parameters (Vcc = 3.0 – 5.5 V)

Sym-bol	Parameter	Mode	Target		T_A, °C	Unit
			Min	Max		
I_{CC1}	AutoShutdown mode supply current	Vcc = 3.3; 5.0 V; FORCEON is connected to GND; $\overline{\text{FORCEOFF}}$ is connected to Vcc RIN not connected	–	10	25±10	µA
				14	-40; 85	
I_{CC2}	Low power consumption mode supply current	Vcc = 3.3; 5.0 V; $\overline{\text{FORCEOFF}}$ is connected to GND RIN connected to GND	–	10	25±10	µA
				14	-40; 85	
I_{CC3}	AutoShutdown Disabled supply current	Vcc = 3.3; 5.0 V; FORCEON & $\overline{\text{FORCEOFF}}$ is connected to Vcc without load	–	1.0	25±10	mA
				1.4	-40; 85	
I_{ILL}	Low level input leakage current (for control inputs and transmitter inputs)	Vcc = 5.5 V; V_{IL} = 0 V	–	-0.5	25±10	µA
				-1.0	-40; 85	
I_{ILH}	High level input leakage current (for control inputs and transmitter inputs)	Vcc = 5.5 V; V_{IH} = V_{CC}	–	0.5	25±10	µA
				1.0	-40; 85	
Receiver						
V_{OLR}	Low level output voltage, V	I_{OL} = 1.6 mA	–	0.3	25±10	V
				0.4	-40; 85	
V_{OHR}	High level output voltage	I_{OH} = -1.0 mA	V_{CC}–0.6	–	25±10	V
					-40; 85	
Vh_R *	Receiver hysteresis, V	–	0.2	1.0	25±10	V
V_{OLINV}	Low level output voltage (for $\overline{\text{INVALID}}$ pin)	I_{OL} = 1.6 mA; FORCEON is connected to GND; $\overline{\text{FORCEOFF}}$ is connected to Vcc	–	0.3	25±10	V
				0.4	-40; 85	
V_{OHINV}	High level output voltage (for $\overline{\text{INVALID}}$ pin)	I_{OH} = –1.0 mA; FORCEON is connected to GND; $\overline{\text{FORCEOFF}}$ is connected to Vcc	V_{CC}–0.6	–	25±10;	V
					-40; 85	

Table 6 continued

Sym-bol	Parameter	Mode	Target		T_A, °C	Unit
			Min	Max		
Receiver						
I_{OZLR}	Low level output current for OFF-state	Receiver output is disabled; V_O = 0 V	–	-2.5	25±10	µA
				-10	-40; 85	
I_{OZHR}	High level output current for “OFF”-state	Receiver output is disabled; V_O = 5.5 V	–	2.5	25±10	µA
				10	-40; 85	
R_I	Input resistance	-	3.0	7.0	25±10	kΩ
t_{PHLR}, t_{PLHR}	OFF-ON switching propagation delay	V_{CC} = 5.0 V; C_L = 150 pF; V_{IL} = 0 V; V_{IH} = 3.0 V; $t_{LH} = t_{HL} \leq$ 10 ns	–	500		ns
t_{SKD}	Propagation delays difference		–	200		ns
t_{PLZR}, t_{PHZR}	Propagation delay of transition from high (low) level state to OFF-state	V_{CC} = 5.0 V; V_{IL} = 0 V; V_{IH} = 3.0 V; $t_{LH} = t_{HL} \leq$ 10 ns; R_L = 1 kΩ	–	400		ns
t_{PZLR}, t_{PZHR}	Propagation delay of transition from OFF-state to high (low) level state		–	400		ns
t_{PHLINV}	Propagation delay of transition $\overline{\text{INVALID}}$ pin to low level state	V_{CC} = 5.0 V; V_{IL} = 0; -3.0 V; V_{IH} = 3.0; 0 V; $t_{LH} = t_{HL} \leq$ 10 ns; C_L = 15 pF	–	80		µs
t_{PLHINV}	Propagation delay of transition $\overline{\text{INVALID}}$ pin to high level state		–	2.9		µs
Transmitter						
V_{OLT}	Low level output voltage	R_L = 3 kΩ	–	-5.07	25±10	V
				-5.0	-40; 85	
V_{OHT}	High level output voltage	R_L = 3 kΩ	5.07	–	25±10	V
			5.0		-40; 85	
Vh_T	Transmitter hysteresis	–	0.1	1.0	25±10	V
R_O	Output resistance	$V_{CC} = V_{V+} = V_V$ = 0 V; V_O = ±2 V	350	–	25±10	Ω
			300		-40; 85	

Table 6 continued

Sym-bol	Parameter, unit	Mode	Target		T_A, °C	Unit
			Min	Max		
Transmitter						
I_{OS}	Short circuit current	–	–	53	25±10	mA
				60	-40; 85	
				-53	25±10	
				-60	-40; 85	
I_{OZLT}	Low level output current for OFF-state	V_{CC} = 0; 3.0 – 5.5 V; V_O= -12 V; transmitter output is disabled	–	-10	25±10	µA
				-25	-40; 85	
I_{OZHT}	High level output current for OFF-state	VCC = 0; 3.0 – 5.5 V; VO = 12 V; transmitter output is disabled	–	10	25±10	µA
				25	-40; 85	
ST	Maximum Data Rate	R_L = 3 kΩ; C_L = 1000 pF; only transmitter is switching	250	–	25±10; -40; 85	kbit/s
SR	Transition-Region Slew Rate	V_{CC} = 3.3 V; R_L = (3-7) kΩ; V_{OT} is changing from +3 to -3 V or from -3 to +3 V; only transmitter is switching C_L = (150 -1000) pF	6.0	30	25±10	V/µs
t_{SKEW}	Propagation delays difference	V_{CC} = 5.0 V; V_{IL} = 0 V; V_{IH} = 3.0 V; t_{LH} = t_{HL} ≤ 10 ns; R_L=3 kOhm; C_L=1000 pF	–	300		ns
t_{WU}	Transmitter output enable time	V_{CC} = 5.0 V; V_{IL} = 0 V; V_{IH} = 3.0 V; V_{IL} = -3.0 V; V_{IH} = 0 V	–	120		µs

* V_{V+}, V_{V-} - voltages applied to pins 03 , 07.

Note:
Electric parameters is indicated for C1=0.047 µF, C2-C4 = 0.33 µF & V_{CC} = 3.0 … 3.6V (or C1-C4 = 0.1 µF & V_{CC} = 4.5 … 5.5)

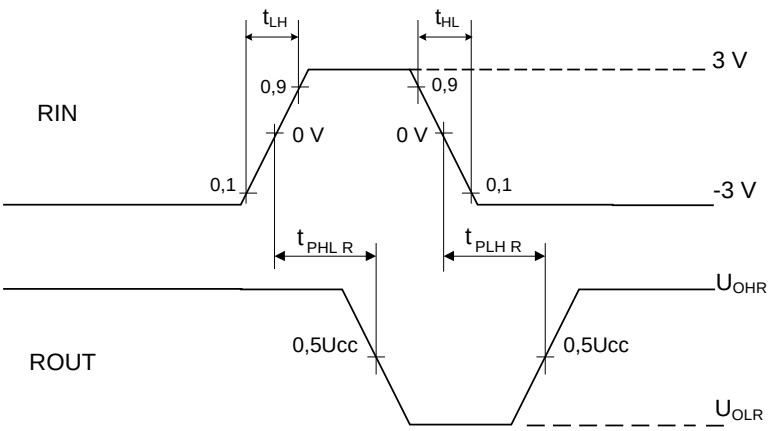

Fig. 4 – Receiver output & input signals time diagram

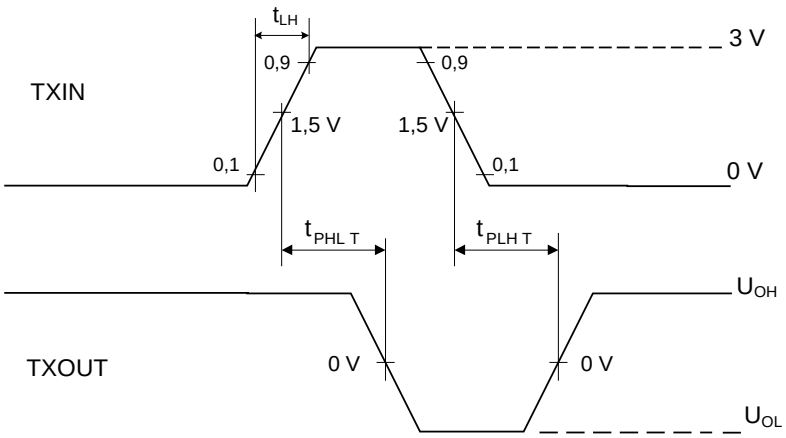

Fig. 5 – Transmitter output & input signals time diagram

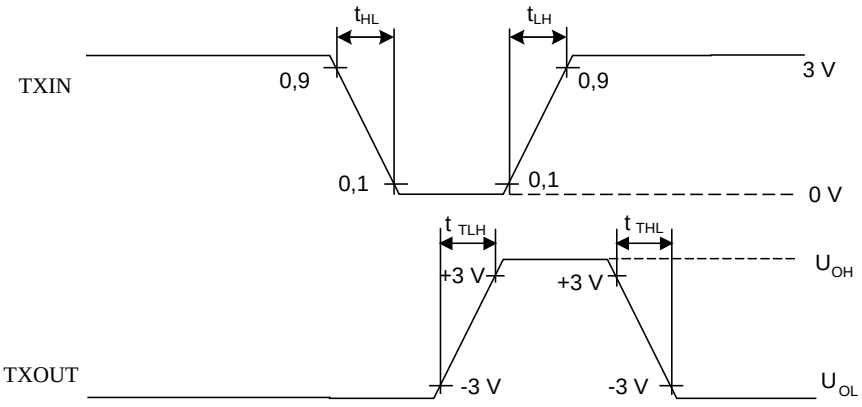

Fig.6 – Transmitter output & input signals time diagram

Package Dimension

SSOP-16

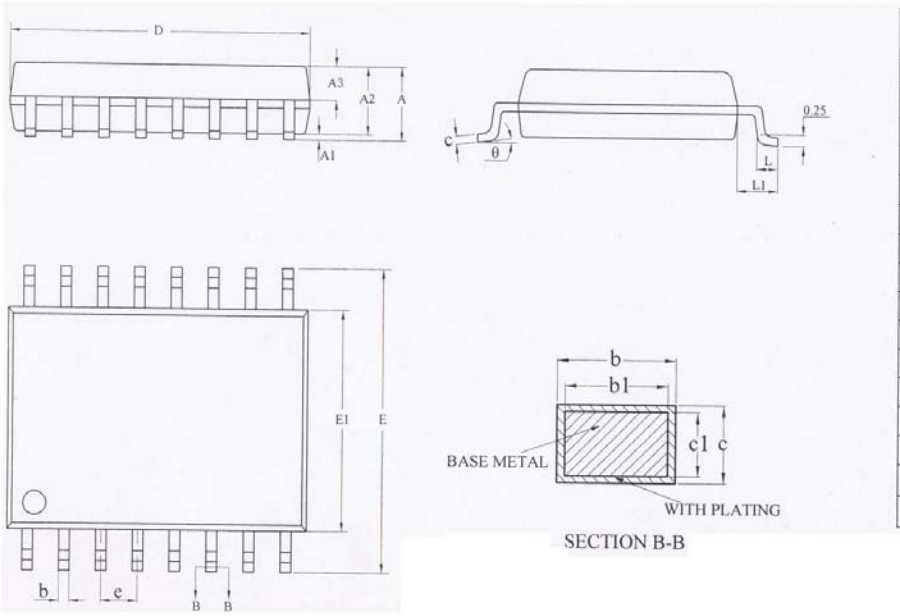

SYMBOL	MILLIMETER		
	MIN	NOM	MAX
A	—	—	1.85
A1	0.05	—	0.25
A2	1.40	1.50	1.60
A3	0.62	0.67	0.72
b	0.29	—	0.37
b1	0.28	0.30	0.33
c	0.15	—	0.20
c1	0.14	0.15	0.16
D	6.00	6.20	6.40
E	7.60	7.80	8.00
E1	5.10	5.30	5.50
e	0.65BSC		
L	0.75	—	1.05
L1	1.25BSC		
θ	0	—	8°
L/F (mil)	130*130		

TSSOP-16

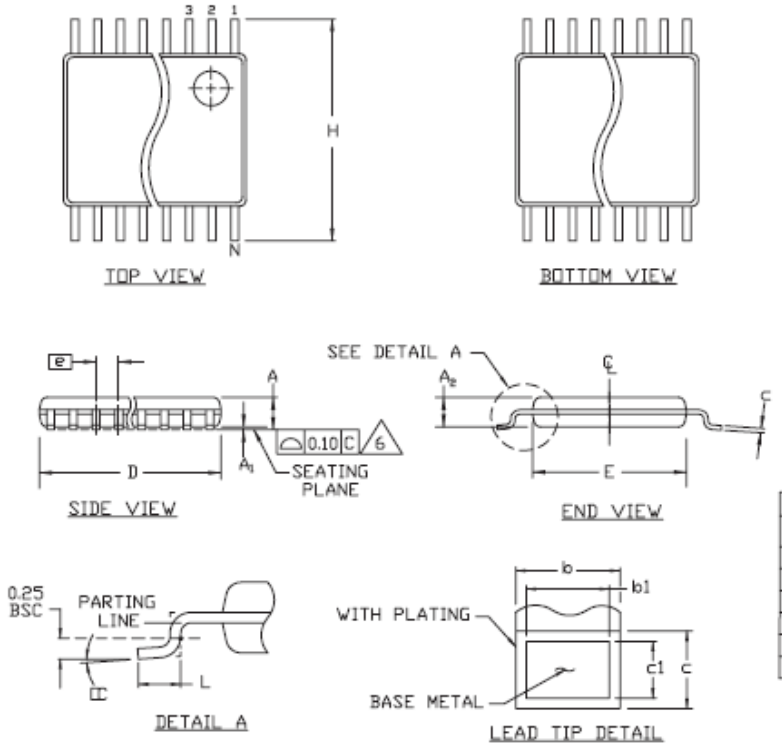

SYMBOL	COMMON DIMENSIONS			
	MILLIMETERS		INCHES	
	MIN.	MAX.	MIN.	MAX.
A	——	1.10		.043
A_1	0.05	0.15	.002	.006
A_2	0.85	0.95	.033	.037
b	0.19	0.30	.007	.012
b_1	0.19	0.25	.007	.010
c	0.09	0.20	.004	.008
c_1	0.09	0.14	.004	.006
D	SEE VARIATIONS		SEE VARIATIONS	
E	4.30	4.50	.169	.177
e	0.65 BSC		.026 BSC	
H	6.25	6.55	.246	.258
L	0.50	0.70	.020	.028
N	SEE VARIATIONS		SEE VARIATIONS	
α	0°	8°	0°	8°

JEDEC			VARIATIONS			
MO-153	N		MILLIMETERS		INCHES	
			MIN.	MAX.	MIN.	MAX.
AB-1	14	D	4.90	5.10	.193	.201
AB	16	D	4.90	5.10	.193	.201
AC	20	D	6.40	6.60	.252	.260
AD	24	D	7.70	7.90	.303	.311
AE	28	D	9.60	9.80	.378	.386

NOTES:
1. DIMENSIONS D AND E DO NOT INCLUDE FLASH
2. MOLD FLASH OR PROTRUSIONS NOT TO EXCEED 0.15mm PER SIDE
3. CONTROLLING DIMENSION: MILLIMETER
4. MEETS JEDEC OUTLINE MO-153. SEE JEDEC VARIATIONS TABLE
5. "N" REFERS TO NUMBER OF LEADS
6. THE LEAD TIPS MUST LIE WITHIN A SPECIFIED ZONE. THIS TOLERANCE ZONE IS DEFINED BY TWO PARALLEL PLANES. ONE PLANE IS THE SEATING PLANE, DATUM [-C-], THE OTHER PLANE IS AT THE SPECIFIED DISTANCE FROM [-C-] IN THE DIRECTION INDICATED