Low-Drop Voltage Regulator

ILE4276

ILE4276 is integrated circuit of voltage regulator 5V/400mA, 8.5V/400mA, 10V/400mA and adjustable with low drop voltage.

The IC is purposed to supply DC voltages 5V, 8,5V, 10V and adjustable from 2,5 to 20 V with drop voltage less 0,5V, with load current 250 mA and low consumption current. The IC is used in power supply units of electronic devices, including automotive electronics. The IC is tolerant to over voltage of both polarities (positive & negative), provide internal current limitation and output voltage thermal shutdown.

The IC realized in 5-pin plastic packages P-TO263-5-1 .

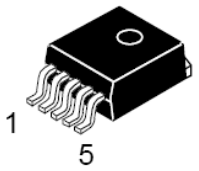

ILE4276-XXD2
P-TO263-5

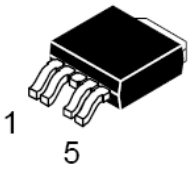

ILE4276-XXD0
P-TO252-5

ORDERING INFORMATION

Device	Operating Temperature Range	Package	Shipping
ILE4276-XXD2	T_j = -40° to 150° C	P-TO263-5	Tube
ILE4276-XXD2T		P-TO263-5	Tape & Reel
ILE4276-XXD0T		P-TO252-5	Tape & Reel

Features

- 5 V, 8.5 V, 10 V or variable output voltage at 400mA
- Accuracy of the output voltage ± 4%;
- Low-drop voltage ;
- Low consumption current;
- Built-in overheating protection;
- Reverse polarity proof;
- Wide junction temperature range -40 … +150°C;
- Suitable for use in automotive electronics;
- Inhibit input.

Table 1. **Pins Description**

Chip pad number	Package pin number	Symbol	Function
01	01	I	Input
02	02	INH	Inhibit input
03	03	GND	Common pin (Ground)
04	04	NC	For ILE4276-8.5, ILE4276-5.0, ILE4276-10 pin is not used
		VA	Adjustment Output (for ILE4276-AD)
05	05	Q	Output

Block Diagram

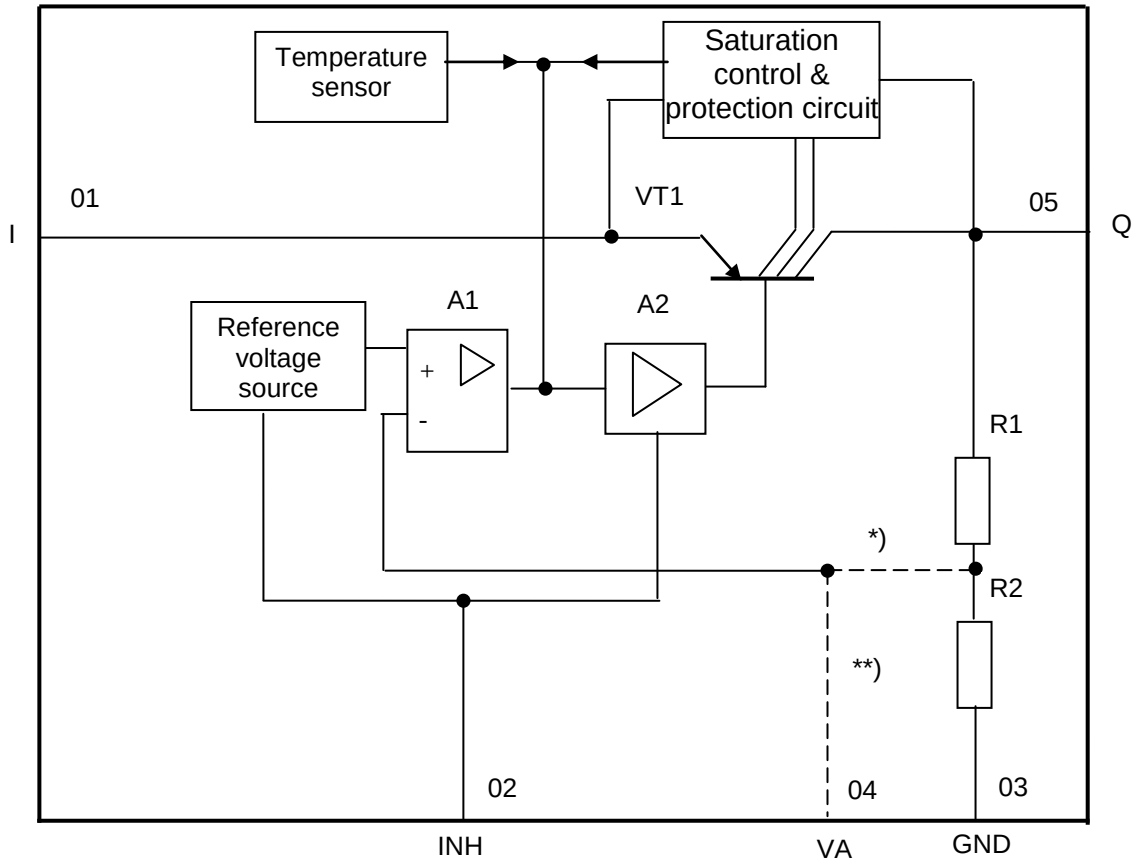

A1 – control amplifier;
A2 – buffer;
R1, R2 –resistors;
VT1 - transistor

* For ICs ILE4276-10, ILE4276-5.0, ILE4276-8.5
** For ICs ILE4276-AD.

Figure 1.

Table 2. **Absolute Maximum Ratings**

Symbol	Parameters	Min.	Max.	Unit
T_J	Junction temperature	-40*	150	^oC
T_{stg}	Storage temperature	-50	150	^oC
V_I	Input voltage I LE4276-5.0, ILE4276-8.5, ILE4276-10 ILE4276-AD (at U_Q < 4 V)	-42	45	V
V_{INH}	Inhibit input voltage	-42**	45**	V
I_{GND}	Ground pin current	-	100	mA
V_Q	Output voltage ILE4276-5.0, ILE4276-8.5, ILE4276-10, ILE4276-AD	-1,0**	40**	V
V_{VA}	Adjustment input voltage ILE4276-AD	-0,3**	10**	V
	_____ * Ambient temperature is indicated. ** Voltage is not applied to input I			

* Stresses beyond those listed under “absolute maximum ratings” may cause permanent damage to the device. These are stress ratings only, and functional operation of the device at these or any other conditions beyond those indicated under “recommended operating conditions” is not implied.
Exposure to absolute-maximum-rated conditions for extended periods may affect device reliability.

Table 3. **Recommended Operation Rate**

Symbol	Parameter	Min.	Max.	Unit
T_J	Junction temperature	-40*	150	^oC
V_I	Input voltage ILE4276-5.0 ILE4276-8.5 ILE4276-10 ILE4276-AD (при U_Q < 4 V)	 5.7 9.34 10.9 4.5	 40 40 40 40	V
V_Q	Output voltage ILE4276-5.0 ILE4276-8.5 ILE4276-10 ILE4276-AD	 4.8 8.16 9.6 2.4	 5.2 8.84 10.4 20	V
V_{VA}	Adjustment input voltage ILE4276-AD	2.4**	2.6**	V

Note:
Maximum power P_{tot},W, dissipated by IC at ambient temperature T_A , is calculated by formula:

$$P_{tot} = (150 - T_A) / R_{th\ j\text{-}a}\ , \qquad (1)$$

150 – maximum permissible operating junction temperature, ^oC.
$R_{th\ j\text{-}a}$ - thermal resistance junction ambient (for IC without heat sink), ^oC /W,
for ILE4276-AD, ILE4276-5.0, ILE4276-8.5, ILE4276-10 without heat sink $R_{th\ ja}$ is equal 80 ^oC /W
for ILE4276-AD, ILE4276-5.0, ILE4276-8.5, ILE4276-10 ILE4275 without heat sink $R_{th\ ja}$ is equal 65 ^oC /W

for IC with heat sink $R_{th\ ja}$ is calculated by formula

$$R_{th\ j\text{-}a} = R_{th\ j\text{-}c} + R_{th\ c\text{-}a}\ , \qquad (2)$$

$R_{th\ j\text{-}c}$ - thermal resistance junction case, ^oC /W. $R_{th\ jc}$ = 4 ^oC/W.
Thermal resistance case-ambient $R_{th\ c\text{-}a}$ is determined by heat sink design and is selected by IC customer.
Application circuit and heat sink and ambient temperature have to provide junction temperature not more $T_J \le 150\ ^oC$.

_____
* Ambient temperature is indicated.

Table 4. **Electric Parameters**

(V_I = 13.5 V, -40°C < T_J < 150°C unless otherwise specified)

Symbol	Parameter	Mode of measurement	Norm		Unit
			Min.	Max.	
V_Q	Output voltage	For ILE4276-5.0			V
		6 V ≤ V_I ≤ 28 V -5 mA ≤ I_Q ≤ -400 mA	4,8	5,2	
		6 V ≤ V_I ≤ 40 V -5 mA ≤ I_Q ≤ -200 mA	4,8	5,2	
		For ILE4276-8.5			
		9.5 V ≤ V_I ≤ 28 V -5 mA ≤ I_Q ≤ -400 mA	8,16	8,84	
		9.5 V ≤ V_I ≤ 40 V -5 mA ≤ I_Q ≤ -200 mA	8,16	8,84	
		For ILE4276-10			
		11 V ≤ V_I ≤ 28 V -5 mA ≤ I_Q ≤ -400 mA	9,6	10,4	
		11 V ≤ V_I ≤ 40 V -5 mA ≤ I_Q ≤ -200 mA	9,6	10,4	
ΔV_Q	Output voltage accuracy	For ILE4276-AD R_2 < 50 kΩ, (V_Q +1) V ≤ V_I ≤ 40 V, V_I > 4,5 V, -5 mA ≤ I_Q ≤ -400 mA	-4	4	%
I_{Qmax}	Maximum output current	Note 2	400	1100	mA
I_q	Consumption current I_q = I_I - I_Q	V_{INH} = 0V, T_J ≤ 100 °C	-	0,01	mA
		I_Q =-1 mA	-	0,22	
		I_Q = -250 mA	-	10	
		I_Q = -400 mA	-	25	
V_{dr}	Drop voltage V_{dr} = V_I - V_Q	I_Q = -250 mA, Note 2 For ILE4276-AD: V_I > 4,5 V	-	0,5	V
$\Delta V_{Q(I)}$	Load current regulation of output voltage	-5 mA ≤ I_Q ≤ -400 mA	-	0,7	%
$\Delta V_{Q(V)}$	Supply (input) voltage regulation of output voltage	12V ≤ V_I ≤ 32 V I_Q = -5 mA	-	0,5	
Inhibit input parameters					
$V_{INH,on}$	Inhibit on voltage	U_Q ≥ 4,9 V	-	3,5	V
$V_{INH,off}$	Inhibit off voltage	U_Q ≤ 0,1 V	0,5	-	V
I_{INH}	Inhibit input current	U_{INH} = 5 V	5	20	µA

Notes

1. Measurement of electric parameters is processed with connected input capacities C_{I1} = 100 µF, C_{I2} = 100 nF and output capacity C_Q = 22 µF.
2. Drop voltage V_{dr} = V_I - V_Q is measured, when the output voltage V_Q has dropped 100mV from the nominal value obtained at V_I = 13.5 V.

* Ambient temperature is indicated.

Table 5. **Typical Electric Parameters**
(V_I = 13.5 V, -40°C < T_J < 150°C unless otherwise specified)

Symbol	Parameter	Test Condition	Typical value	Unit
PSRR	Ripple rejection ratio	f_r = 100 Hz, I_Q = -100 mA V_r = 0,5** V (p - p)	54	dB
dV_Q/dT	Temperature factor of output voltage	-	0.01	mV/°C

* Ambient temperature is indicated.
** It is permitted to measure at $V_{r(p-p)}$ = 3 V, but for that PSRR norm to be revised

Typical Application Diagram

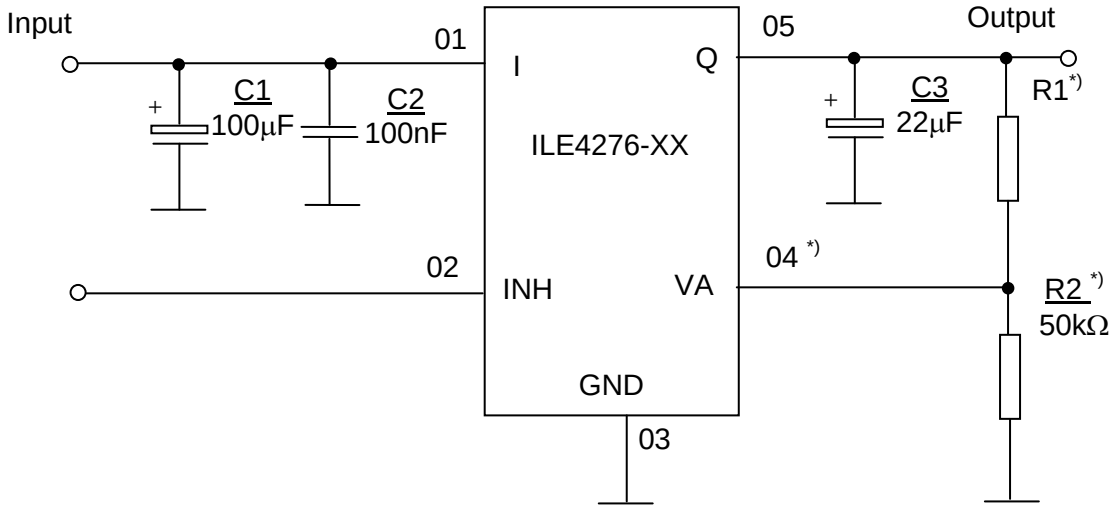

R1, R2 - resistors

* For ILE4276-AD

Figure 2.

Package Dimension

P-TO263-5

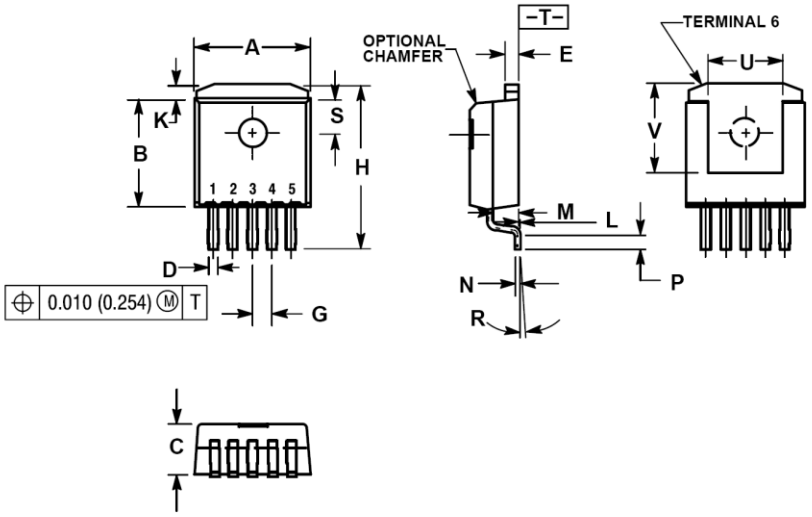

NOTES:
1. DIMENSIONING AND TOLERANCING PER ANSI Y14.5M, 1982.
2. CONTROLLING DIMENSION: INCH.
3. TAB CONTOUR OPTIONAL WITHIN DIMENSIONS A AND K.
4. DIMENSIONS U AND V ESTABLISH A MINIMUM MOUNTING SURFACE FOR TERMINAL 6.
5. DIMENSIONS A AND B DO NOT INCLUDE MOLD FLASH OR GATE PROTRUSIONS. MOLD FLASH AND GATE PROTRUSIONS NOT TO EXCEED 0.025 (0.635) MAXIMUM.

DIM	INCHES		MILLIMETERS	
	MIN	MAX	MIN	MAX
A	0.386	0.403	9.804	10.236
B	0.356	0.368	9.042	9.347
C	0.170	0.180	4.318	4.572
D	0.026	0.036	0.660	0.914
E	0.045	0.055	1.143	1.397
G	0.067 BSC		1.702 BSC	
H	0.539	0.579	13.691	14.707
K	0.050 REF		1.270 REF	
L	0.000	0.010	0.000	0.254
M	0.088	0.102	2.235	2.591
N	0.018	0.026	0.457	0.660
P	0.058	0.078	1.473	1.981
R	5° REF		5° REF	
S	0.116 REF		2.946 REF	
U	0.200 MIN		5.080 MIN	
V	0.250 MIN		6.350 MIN	

P-TO252-5

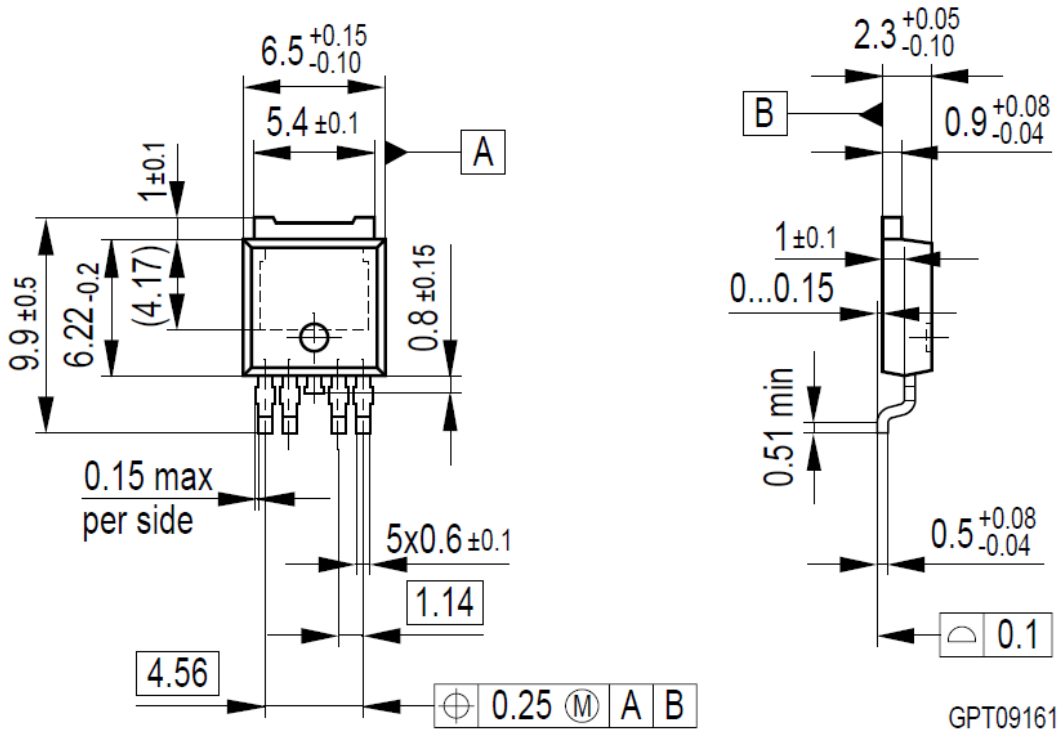

All metal surfaces tin plated, except area of cut.