IL2410

Tone Ringer

The IL2410 is a bipolar integrated circuit designed for telephone bell replacement.

- Designed for Telephone Bell Replacement
- Low Curent Drain
- Adjustable 2-frequency Tone
- Adjustable Warbling Rate
- Extension Tone Ringer Modules
- Alarms or Other Alerting Devices
- External Triggering or Ringer Disable
- Built-in hysteresis prevents false triggering and rotary dial ‘Chirps’

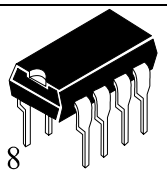

N SUFFIX
PLASTIC

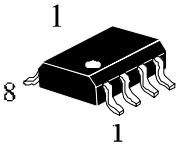

D SUFFIX
SOIC

ORDERING INFORMATION
IL2410N Plastic
IL2410D SOIC
T_A = -45° to 65° C
for package

LOGIC DIAGRAM

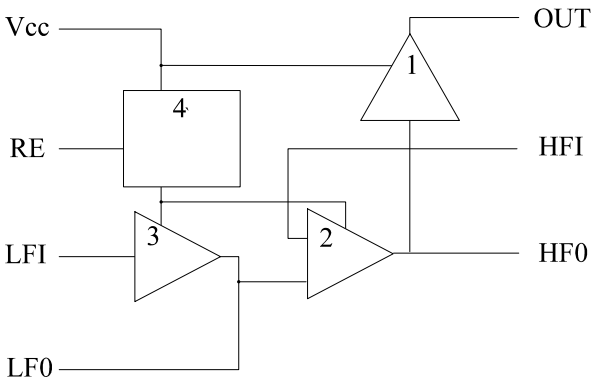

PIN 1 = V_{CC}
PIN 5 = GND

1. Output amplifier
2. High frequency oscillator
3. Low frequency oscillator
4. Hysteresis regulator
   (Regulator circuit has built-in hysteresis to prevent false triggering and rotary dial “Chirps”)

PIN ASSIGNMENT

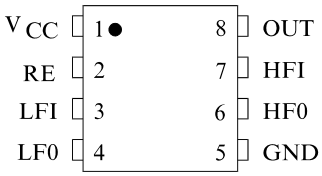

PIN DESCRIPTION

NAME	PIN	DESCRIPTION
V_{CC}	1	Positive power supply.
RE	2	Initiation of oscillation start input
LFI	3	Low frequency oscillator input
LF0	4	Low frequency oscillator output
GND	5	Negative power supply
HF0	6	High frequency oscillator output
HFI	7	High frequency oscillator input
OUT	8	Tone output

MAXIMUM RATINGS*

Symbol	Parameter	Value	Unit
V_{CC}	DC Supply Voltage (Referenced to GND)	to +30.0	V
P_D	Power Dissipation in Still Air, Plastic DIP	400	mW
Tstg	Storage Temperature	-65 to +150	°C

* Maximum Ratings are those values beyond which damage to the device may occur.
Functional operation should be restricted to the Recommended Operating Conditions.

RECOMMENDED OPERATING CONDITIONS

Symbol	Parameter	Min	Max	Unit
V_{CC}	DC Supply Voltage (Referenced to GND)	13.0	29.0	V
T_A	Operating Temperature	-45	+65	°C

This device contains protection circuitry to guard against damage due to high static voltages or electric fields. However, precautions must be taken to avoid applications of any voltage higher than maximum rated voltages to this high-impedance circuit. For proper operation, V_{IN} and V_{OUT} should be constrained to the range GND≤(V_{IN} or V_{OUT})≤V_{CC}.

Unused inputs must always be tied to an appropriate logic voltage level (e.g., either GND or V_{CC}). Unused outputs must be left open.

ELECTRICAL CHARACTERISTICS (Voltages Referenced to GND, T_A = -45 to +65°C)

Symbol	Parameter	Test Conditions	Guaranteed Limits			Unit
			Min	Typ	Max	
V_{SI}	Initiation Supply Voltage (1)	See Fig. 1	16.8		21.2	V
I_{SI}	Initiation Supply Current (1)		1.4		4.2	mA
V_{SUS}	Sustaining Voltage (2)	See Fig. 1	9.5		12.2	V
I_{SUS}	Sustaining Current (2)	No Load $V_{CC}=V_{SUS}$ See Fig. 1	0.7		2.5	mA
V_{TR}	Trigger Voltage (3)	V_{CC}=15V	8.8		12.2	V
I_{TR}	Trigger Current (3,5)	V_{CC}=15V	5.0		1000	μA
V_{DIS}	Disable Voltage (4)	V_{CC}=21V	-		0.7	V
I_{DIS}	Disable Current (4)	V_{CC}=15V	-20		-	μA
V_{OH}	High-Level Output Voltage	V_{CC}=21V, I_{OH}=-15mA, Pin 6=6V, Pin 7=GND	16.7		21.0	V
V_{OL}	Low-Level Output Voltage	V_{CC}=21V, I_{OL}=15mA, Pin 6=GND, Pin 7=6V	-		1.8	V
I_{IN}	Maximun Input Leakage Current (Pin 3)	Pin 3=6V, Pin 4=GND, V_{CC}=21V	-		1.0	μA
	(Pin 7)	Pin 7=6V, Pin 6=GND, V_{CC}=21V	-		1.0	μA
f_{H1}	High Frequency 1	R_3=191KΩ,C_3=6800pF	461		563	Hz
f_{H2}	High Frequency 2	R_3=191KΩ,C_3=6800pF	576		704	Hz
f_L	Low Frequency	R_2=165KΩ, C_2=0.47μF	9.0		11.0	Hz

Notes:
1. Initiation supply voltage (V_{SI}) is the supply voltage required to start the tone ringer oscillating.
2. Sustaining voltage (V_{SUS}) is the supply voltage required to maintain oscillation.
3. V_{TR} and I_{TR} are the conditions applied to trigger in to start oscillation for $V_{SUS} \le V_{CC} \le V_{SI}$.
4. V_{DIS} and I_{DIS} are the conditions applied to trigger in to inhibit oscillation for $V_{SI} \le V_{CC}$.
5. Trigger current must be limited to this value externally.

CIRCUIT CURRENT-SUPPLY VOLTAGE (NO LOAD)

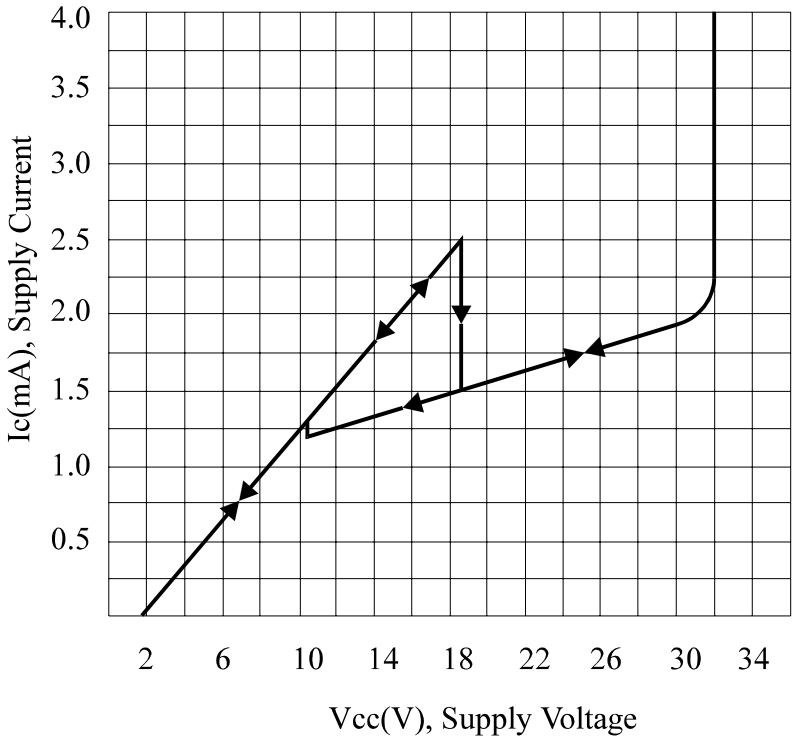

Figure 1

APPLICATION CIRCUIT

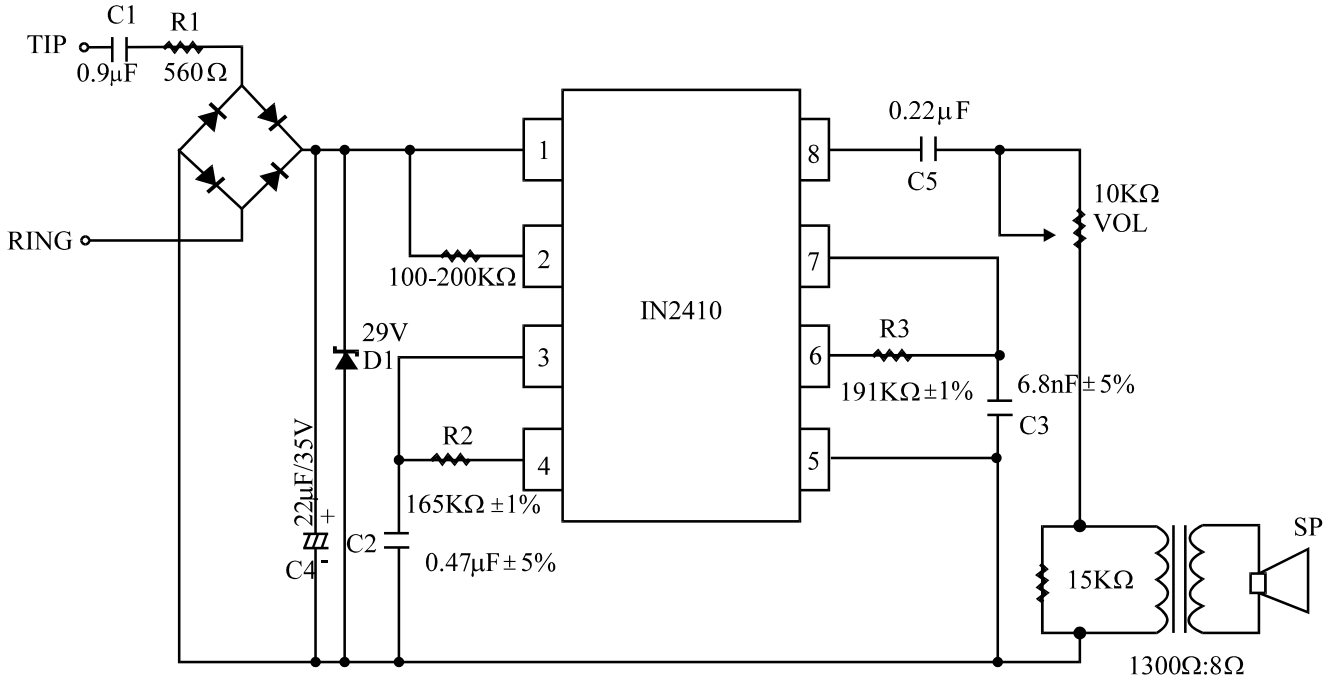

Figure 2

APPLICATION NOTE

The application circuit illustrates the use of the IL2410 devices in typical telephone or extension tone ringer application.
The AC ringer signal voltage appears across the TIP and RING inputs of the circuit and is attenuated by capacitor C_1 and resistor R_1.
C_1 also provides isolation from DC voltages (48V) on the exchange line.
After full wave rectification by the bridge diode, the waveform is filtered by capacitor C_4 to provide a DC supply for the tone ringer chip.
As this voltage exceeds the initiation voltage (V_{SI}), oscillation starts.
With the components shown, the ouptut frequency chops between 512(f_{h1}) and 640Hz(f_{h2}) at a 10Hz(f_L) rate.
The loudspeaker load is coupled through a 1300Ω to 8Ω ransformer.
The output coupling capacitor C_5 is required with transformer coupled loads.
When driving a piezo-ceramic transducer type load, the coupling C_5 and transformer (1300Ω:8Ω) are not required. However, a current limiting resistor is required.
The low frequency oscillator oscillates at a rate (f_L) controlled by an external resistor (R_2) and capacitor (C_2).
The frequency can be determined using the relation $f_L=1/1.289R_2xC_2$. The high frequency oscillates at a f_{H1}, f_{H2} controlled by an external resistor (R_3) and capacitor (C_3). The frequency can be determined using the relation $f_{H1}=1/1.504R_3xC_3$, $f_{H2}=1/1.203R_3xC_3$.

TRIGGERING IL2410 FROM CMOS OR TTL LOGIC

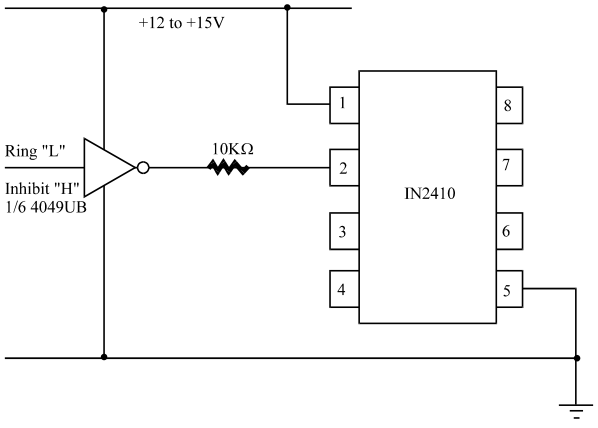

Figure 3

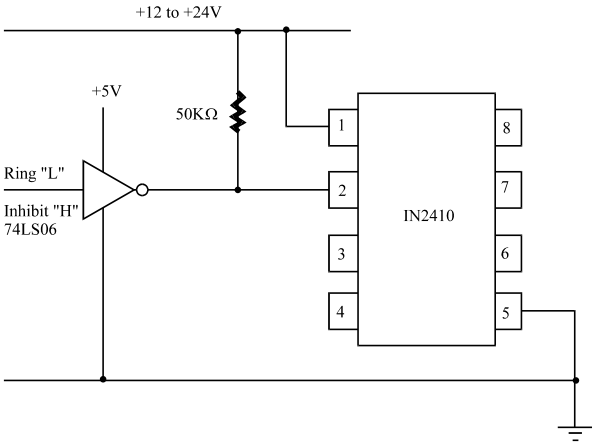

Figure 4

EQUIVALENT CIRCUIT (Pin 2 Input)

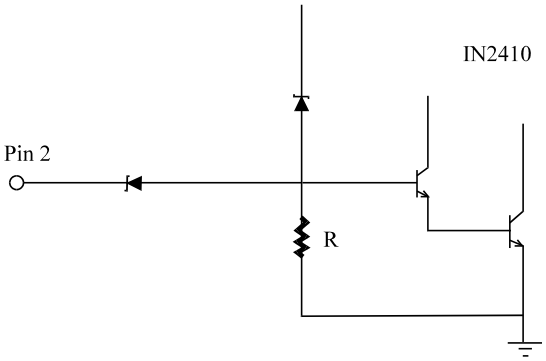

Figure 5

INHIVITING OSCILLATION

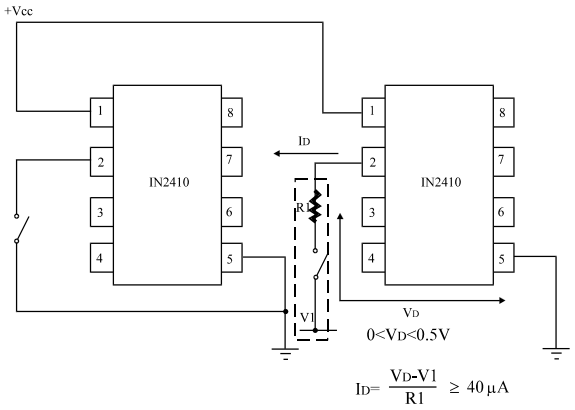

Figure 6

PROGRAMMING THE IL2410 INITIATION SUPPLY VOLTAGE

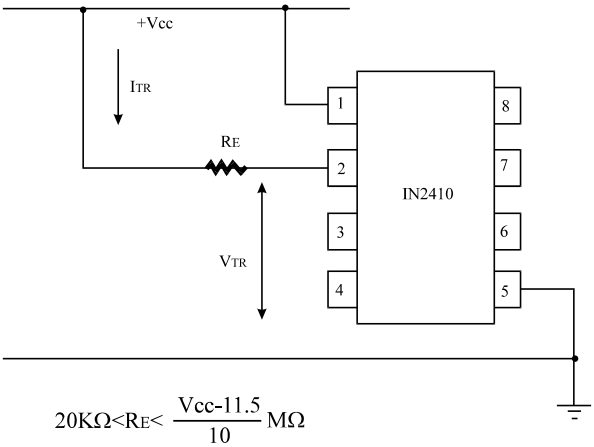

Figure 7

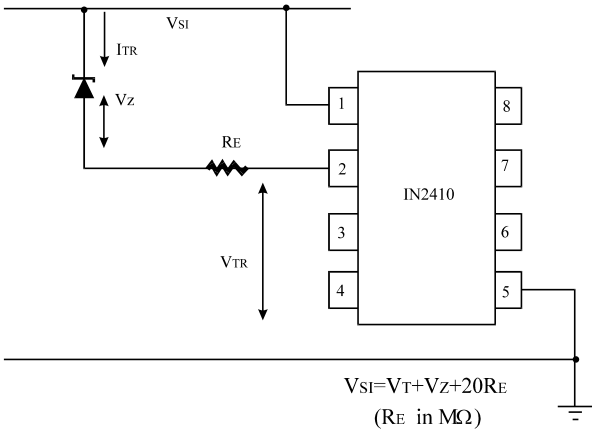

Figure 8

N SUFFIX PLASTIC DIP
(MS – 001BA)

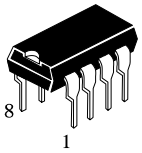

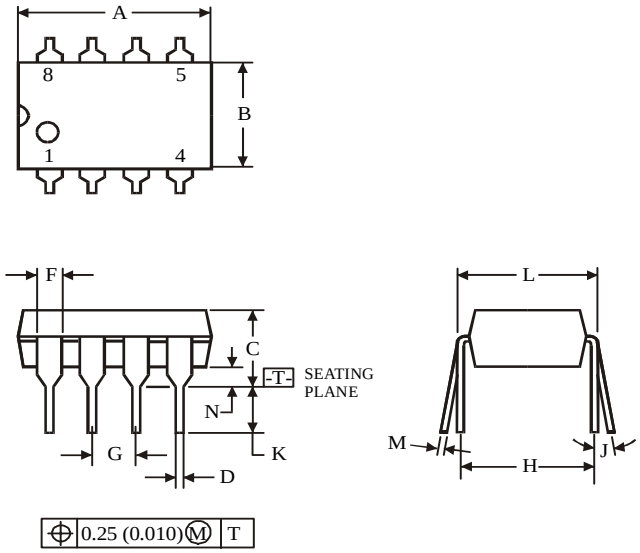

	Dimension, mm	
Symbol	**MIN**	**MAX**
A	8.51	10.16
B	6.1	7.11
C		5.33
D	0.36	0.56
F	1.14	1.78
G	2.54	
H	7.62	
J	0°	10°
K	2.92	3.81
L	7.62	8.26
M	0.2	0.36
N	0.38	

NOTES:

1. Dimensions “A”, “B” do not include mold flash or protrusions.
   Maximum mold flash or protrusions 0.25 mm (0.010) per side.

D SUFFIX SOIC
(MS - 012AA)

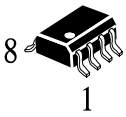

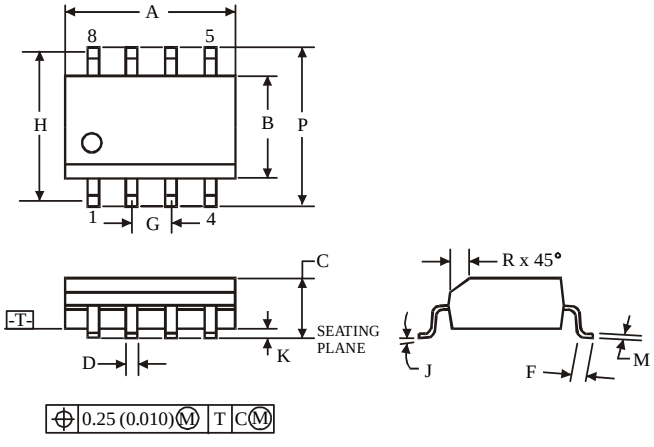

	Dimension, mm	
Symbol	**MIN**	**MAX**
A	4.8	5
B	3.8	4
C	1.35	1.75
D	0.33	0.51
F	0.4	1.27
G	1.27	
H	5.72	
J	0°	8°
K	0.1	0.25
M	0.19	0.25
P	5.8	6.2
R	0.25	0.5

NOTES:

1. Dimensions A and B do not include mold flash or protrusion.
2. Maximum mold flash or protrusion 0.15 mm (0.006) per side
   for A; for B – 0.25 mm (0.010) per side.