ADMIRAL CLASS - INTERNATIONAL LEAD WIRES, POWER TRANSFORMER

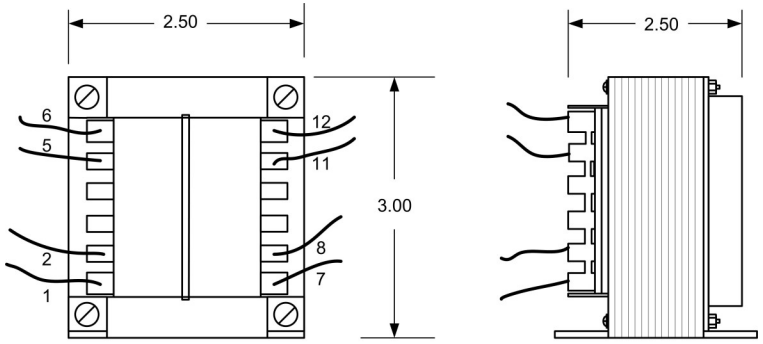

Standard 6” Lead Length

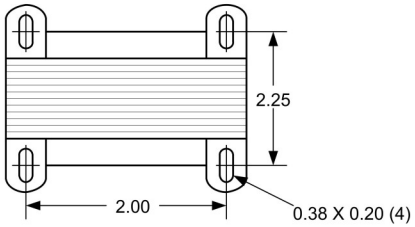

Primary Schematics

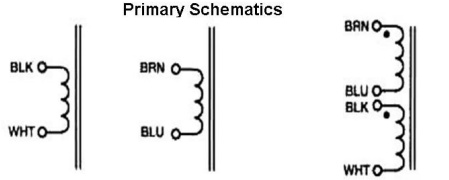

Single Input (Specify 115V or 120V)

Single Input (Specify 230V or 240V)

Series/Parallel Input (Specify 115/230V or 120/240V)

Secondary Schematics

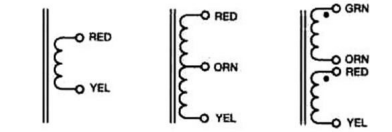

Single Output

Center-Tapped Output

Series/Parallel Output

1. Electrical Specifications
   - A. Maximum Power: 175VA
   - B. Input Voltage and Frequency: 115V, 115/230V, 230V 50/60Hz
   - C. Voltage Regulation: __% TYP @ full load to no load
   - D. Temperature Rise: __°C TYP
   - E. Insulation Resistance: ____
   - F. Hi-Pot: 4000Vrms 1 minute @ Pri to Sec
     _____Vrms 1 minute @ Pri to Core
     _____Vrms 1 minute @ Sec to Core
2. Marking: Ensign Corp, part number (see table), date code
3. Safety:
   UL/cUL 5085-2 Recognized (File 47299)
   UL 60950 Recognized (File E144070)
   VDE 0805 Licensed (File 19019-3336-9002/A1C)
   UL 1446 Recognized Insulation System (File 95662)

Part Number				
115V	115/230V	230V	Series Connection	Parallel Connection
IL175-1-010X	IL175-2-010X	IL175-3-010X	10VCT @ 17.5A	5V @ 35.0A
IL175-1-012X	IL175-2-012X	IL175-3-012X	12.6VCT @ 14.0A	6.3V @ 28.0A
IL175-1-016X	IL175-2-016X	IL175-3-016X	16VCT @ 11.0A	8V @ 22.0A
IL175-1-020X	IL175-2-020X	IL175-3-020X	20VCT @ 8.75A	10V @ 17.5A
IL175-1-024X	IL175-2-024X	IL175-3-024X	24VCT @ 7.3A	12V @ 14.6A
IL175-1-028X	IL175-2-028X	IL175-3-028X	28VCT @ 6.25A	14V @ 12.5A
IL175-1-036X	IL175-2-036X	IL175-3-036X	36VCT @ 4.9A	18V @ 9.8A

ENSIGN THE FLAGSHIP OF CUSTOM MAGNETICS SINCE 1939	**POWER TRANSFORMER ADMIRAL CLASS**	**IL175-1-XXXX IL175-2-XXXX IL175-3-XXXX**	
CONTENTS OF THIS DRAWING ARE SUBJECT TO CHANGE WITHOUT PRIOR NOTICE	**Ensign Corporation** **201 ENSIGN RD., BELLEVUE, IA 52031**	Dim: Inches	Sheet 1 of 1

PROPRIETARY NOTICE: THIS DRAWING PRINT OR DOCUMENT AND SUBJECT MATTER DISCLOSED HEREIN ARE PROPRIETARY ITEMS TO WHICH ENSIGN RETAINS THE EXCLUSIVE RIGHT OF DISSEMINATION, MANUFACTURE AND SALE. THIS DRAWING, PRINT OR DOCUMENT IS SUBMITTED IN CONFIDENCE FOR CONSIDERATION BY THE RECIPIENT ALONE UNLESS PERMISSION FOR FURTHER DISCLOSURE IS EXPRESSLY GRANTED IN WRITING