QUICKSWITCH® PRODUCTS HIGH-SPEED CMOS QUICKSWITCH 32-BIT MULTIWIDTH™ BUS SWITCHES

IDTQS34X245

FEATURES:

- Enhanced N channel FET with no inherent diode to Vcc
- Bidirectional switches connect inputs to outputs
- Zero propagation delay, zero ground bounce
- QS34X245 is 32-bit version of QS3245
- Flow-through pinout for easy layout
- Undershoot clamp diodes on all switch and control inputs
- TTL-compatible control inputs
- Available in 80-pin MilliPaQ™ package

APPLICATIONS:

- Hot-swapping, hot-docking
- Voltage translation (5V to 3.3V)
- Bus switching and isolation
- Power conservation
- Logic replacement (data processing)
- Capacitance isolation
- Clock gating

DESCRIPTION:

The QS34X245 is a member of the MultiWidth™ family of QuickSwitch devices and provides a set of 32 high-speed CMOS compatible bus switches in a flow-through pinout. This device is available in the MilliPaQ package, the world's first small outline 32-bit solution. The low ON-resistance of the QS34X245 allows inputs to be connected to outputs without adding propagation delay and without generating additional ground bounce noise. When Output Enable ($\overline{OEn}$) is low, the switches are turned on, connecting bus A to bus B. When $\overline{OEn}$ is high, the switches are turned off. This device is ideally suited for 32/64 bit applications where board space is at a premium.

QuickSwitch devices provide speeds an order of magnitude faster than conventional logic devices.

The QS34X245 is characterized for operation at -40°C to +85°C.

FUNCTIONAL BLOCK DIAGRAM

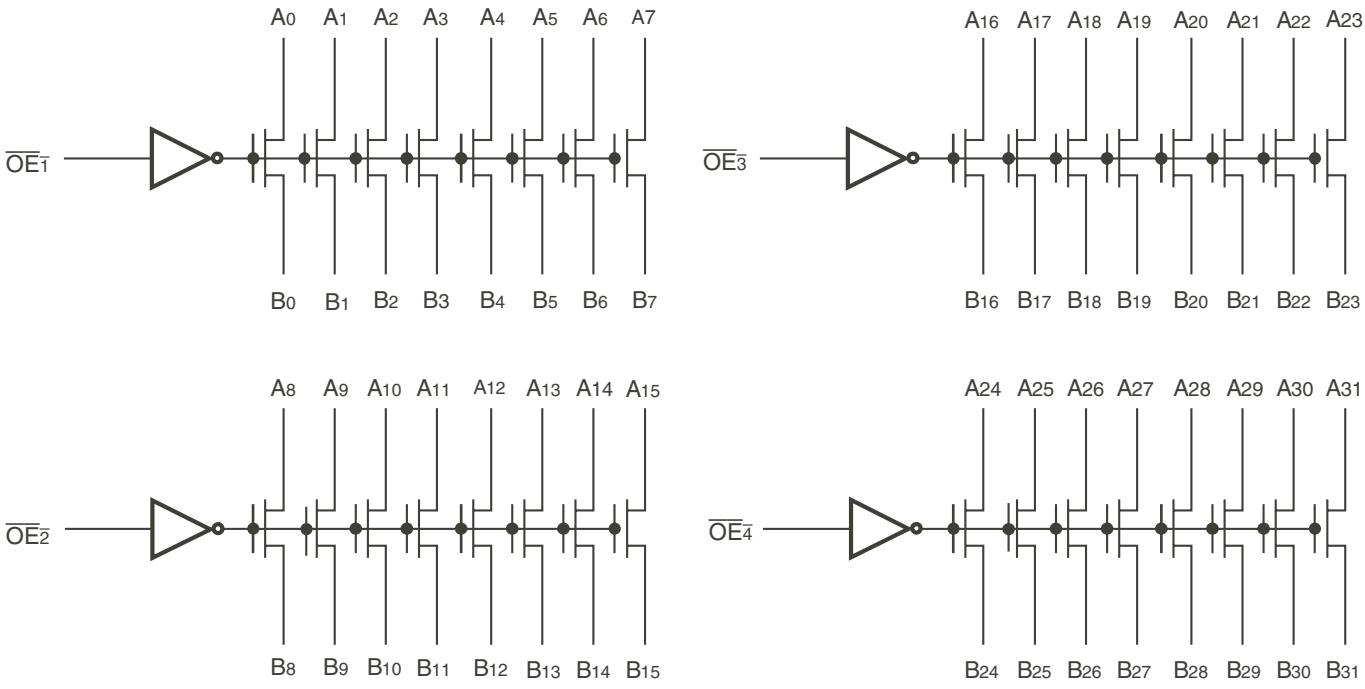

The IDT logo is a registered trademark of Integrated Device Technology, Inc.

© 2012 Integrated Device Technology, Inc.

PIN CONFIGURATION

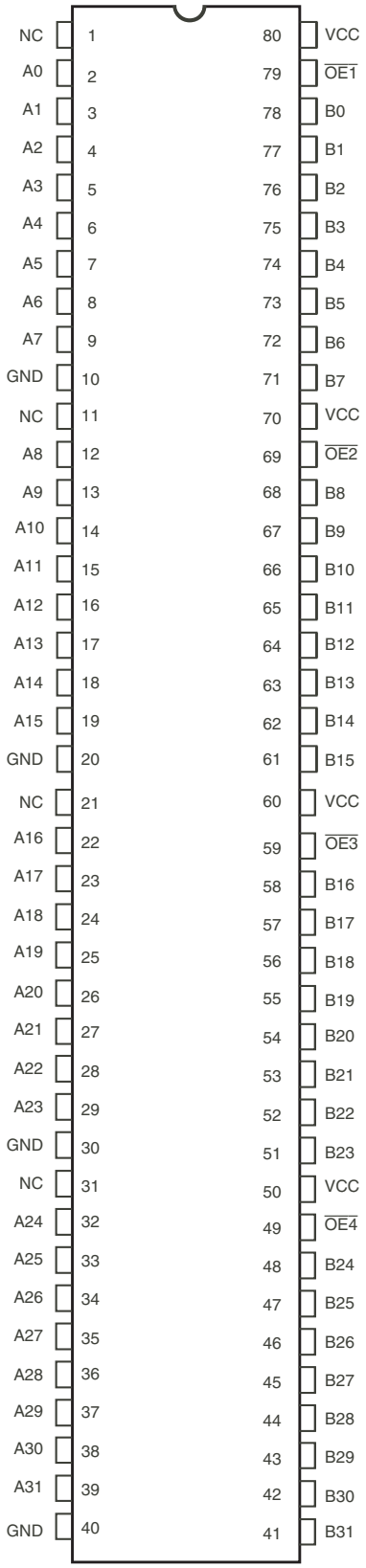

MILLIPAQ
TOP VIEW

ABSOLUTE MAXIMUM RATINGS(1)

Symbol	Description	Max	Unit
V_{TERM}(2)	Supply Voltage to Ground	–0.5 to +7	V
V_{TERM}(3)	DC Switch Voltage Vs	–0.5 to +7	V
V_{TERM}(3)	DC Input Voltage V_{IN}	–0.5 to +7	V
V_{AC}	AC Input Voltage (pulse width ≤ 20ns)	–3	V
I_{OUT}	DC Output Current	120	mA
P_{MAX}	Maximum Power Dissipation (T_A =70°C)	1.4	W
T_{STG}	Storage Temperature	–65 to +150	°C

NOTE:
1. Stresses greater than those listed under ABSOLUTE MAXIMUM RATINGS may cause permanent damage to the device. This is a stress rating only and functional operation of the device at these or any other conditions above those indicated in the operational sections of this specification is not implied. Exposure to absolute maximum rating conditions for extended periods may affect reliability.
2. Vcc terminals.
3. All terminals except Vcc.

CAPACITANCE

(T_A = +25°C, f = 1.0MHz, V_{IN} = 0V, V_{OUT} = 0V)

Pins	Typ.	Max.(1)	Unit
Control Pins	3	4	pF
Quickswitch Channels (Switch OFF)	7	8	pF

NOTE:
1. This parameter is measured at characterization but not tested.

PIN DESCRIPTION

Pin Names	Description
$\overline{OE}$n	Output Enable
An	Data I/Os
Bn	Data I/Os

FUNCTION TABLE(1)

$\overline{OE}$n	Function
H	Disconnected
L	An = Bn

NOTE:
1. H = HIGH Voltage Level
   L = LOW Voltage Level

DC ELECTRICAL CHARACTERISTICS OVER OPERATING RANGE

Following Conditions Apply Unless Otherwise Specified:
Industrial: T_A = –40°C to +85°C, V_{CC} = 5.0V ±5%

Symbol	Parameter	Test Conditions	Min.	Typ.[1]	Max.	Unit
V_{IH}	Input HIGH Level	Guaranteed Logic HIGH for Control Pins	2	—	—	V
V_{IL}	Input LOW Level	Guaranteed Logic LOW for Control Pins	—	—	0.8	V
I_{IN}	Input LeakageCurrent (Control Inputs)	0V ≤ V_{IN} ≤ V_{CC}	—	—	±1	µA
I_{OZ}	Off-State Current (Hi-Z)	0V ≤ V_{OUT} ≤ V_{CC}, Switches OFF	—	—	±1	µA
R_{ON}	Switch ON Resistance	V_{CC} = Min., V_{IN} = 0V, I_{ON} = 30mA	—	5	7	Ω
		V_{CC} = Min., V_{IN} = 2.4V, I_{ON} =15mA	—	10	15	
V_P	Pass Voltage[2]	V_{IN} = V_{CC} = 5V, I_{OUT} = -5µA	3.7	4	4.2	V

NOTES:
1. Typical values are at V_{CC} = 5.0V, T_A = 25°C.
2. Pass Voltage is guaranteed but not production tested.

TYPICAL ON RESISTANCE vs V_{IN} AT V_{CC} = 5V

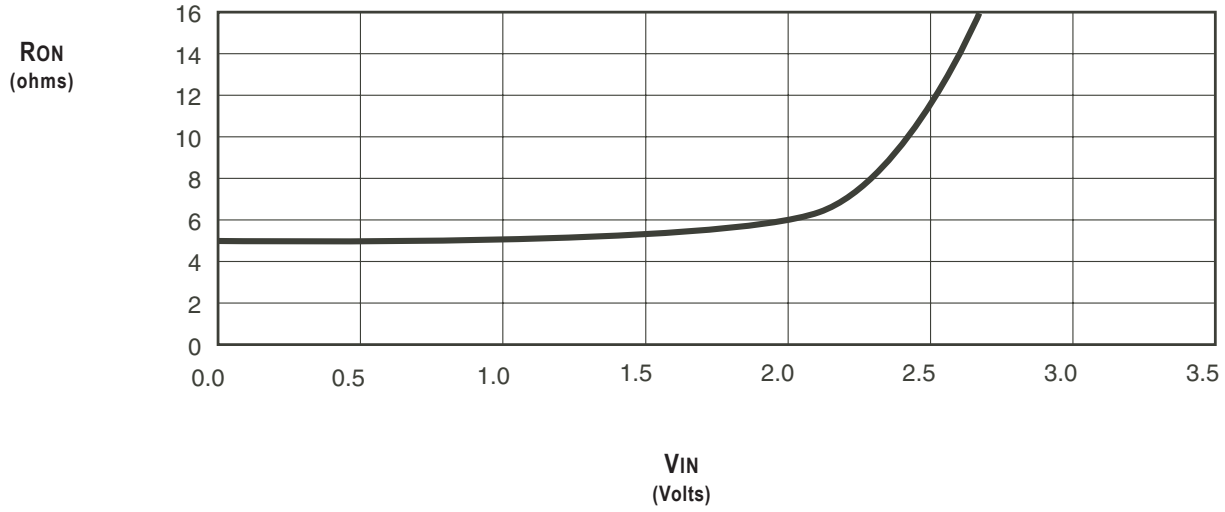

POWER SUPPLY CHARACTERISTICS

Symbol	Parameter	Test Conditions[1]	Max.	Unit
I_{CCQ}	Quiescent Power Supply Current	V_{CC} = Max., V_{IN} = GND or Vcc, f = 0	12	µA
ΔI_{CC}	Power Supply Current per Control Input HIGH [2]	V_{CC} = Max., V_{IN} = 3.4V, f = 0	1.5	mA
I_{CCD}	Dynamic Power Supply Current per MHz[3]	V_{CC} = Max., A and B pins open Control Inputs Toggling at 50% Duty Cycle	0.25	mA/MHz

NOTES:
1. For conditions shown as Min. or Max., use the appropriate values specified under DC Electrical Characteristics.
2. Per TLL driven input (V_{IN} = 3.4V, control inputs only). A and B pins do not contribute to ΔI_{CC}.
3. This current applies to the control inputs only and represents the current required to switch internal capacitance at the specified frequency. The A and B inputs generate no significant AC or DC currents as they transition. This parameter is guaranteed but not production tested.

SWITCHING CHARACTERISTICS OVER OPERATING RANGE

T_A = -40°C to +85°C, V_{CC} = 5.0V ± 5%;

C_{LOAD} = 50pF, R_{LOAD} = 500Ω unless otherwise noted.

Symbol	Parameter	Min.[1]	Typ.	Max.	Unit
t_{PLH} t_{PHL}	Data Propagation Delay[1,2] An to/from Bn	—	—	0.25	ns
t_{PZL} t_{PZH}	Switch Turn-on Delay $\overline{OE}$ to An/Bn	0.5	—	5.6	ns
t_{PLZ} t_{PHZ}	Switch Turn-off Delay[1] $\overline{OE}$ to An/Bn	0.5	—	5.2	ns

NOTES:
1. Minimums are guaranteed but not production tested.
2. The bus switch contributes no propagation delay other than the RC delay of the ON resistance of the switch and the load capacitance. The time constant for the switch alone is of the order of 0.25ns for C_L = 50pF. Since this time constant is much smaller than the rise and fall times of typical driving signals, it adds very little propagation delay to the system. Propagation delay of the bus switch, when used in a system, is determined by the driving circuit on the driving side of the switch and its interaction with the load on the driven side.

ORDERING INFORMATION

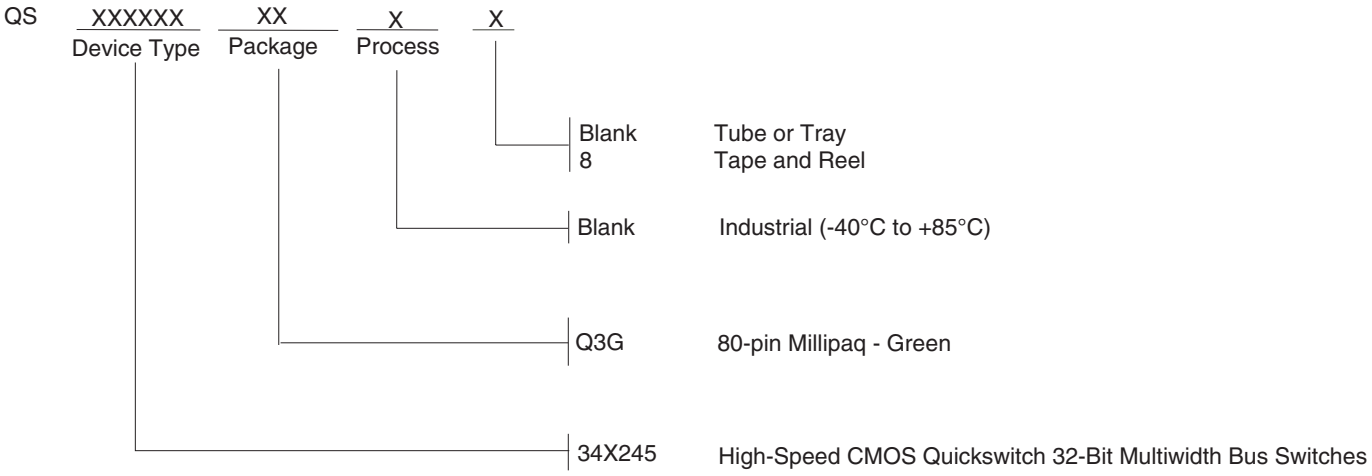

Datasheet Document History

10/14/08	Pg. 5	Updated the ordering information by removing the "IDT" notation.
08/15/12	Pg. 5	Updated the ordering information by removing non RoHS part and by adding Tape and Reel information.

CORPORATE HEADQUARTERS
6024 Silver Creek Valley Road
San Jose, CA 95138

for SALES:
800-345-7015 or 408-284-8200
fax: 408-284-2775
www.idt.com

for Tech Support:
logichelp@idt.com