QUICKSWITCH® PRODUCTS HIGH-SPEED CMOS QUICKSWITCH DUAL 4:1 MUX/DEMUX

IDTQS3253

FEATURES:

- **Enhanced N channel FET with no inherent diode to Vcc**
- **5Ω bidirectional switches connect inputs to outputs**
- **Pin compatible with the 74F253, 74FCT253, and 74FCT253T**
- **Zero propagation delay, zero ground bounce**
- **Undershoot clamp diodes on all switch and control inputs**
- **TTL-compatible control inputs**
- **Available in SOIC, QSOP, and S1 packages**

APPLICATIONS:

- **Logic replacement**
- **Video, audio, graphics switching, muxing**
- **Hot-swapping, hot-docking**
- **Voltage translation (5V to 3.3V)**
- **Power conservation**
- **Bus funneling**

DESCRIPTION:

The QS3253 is a high-speed CMOS TTL-compatible dual 4:1 multiplexer/demultiplexer with 3-state outputs. The QS3253 is function and pinout compatible version of the 74F253, 74FCT253, and the 74ALS/AS/LS253 dual 4:1 multiplexers. The low ON resistance of the QS3253 allows inputs to be connected to outputs without adding propagation delay and without generating additional ground bounce noise.

Mux/Demux devices provide an order of magnitude faster speed than equivalent logic devices.

The QS3253 is characterized for operation at -40°C to +85°C.

FUNCTIONAL BLOCK DIAGRAM

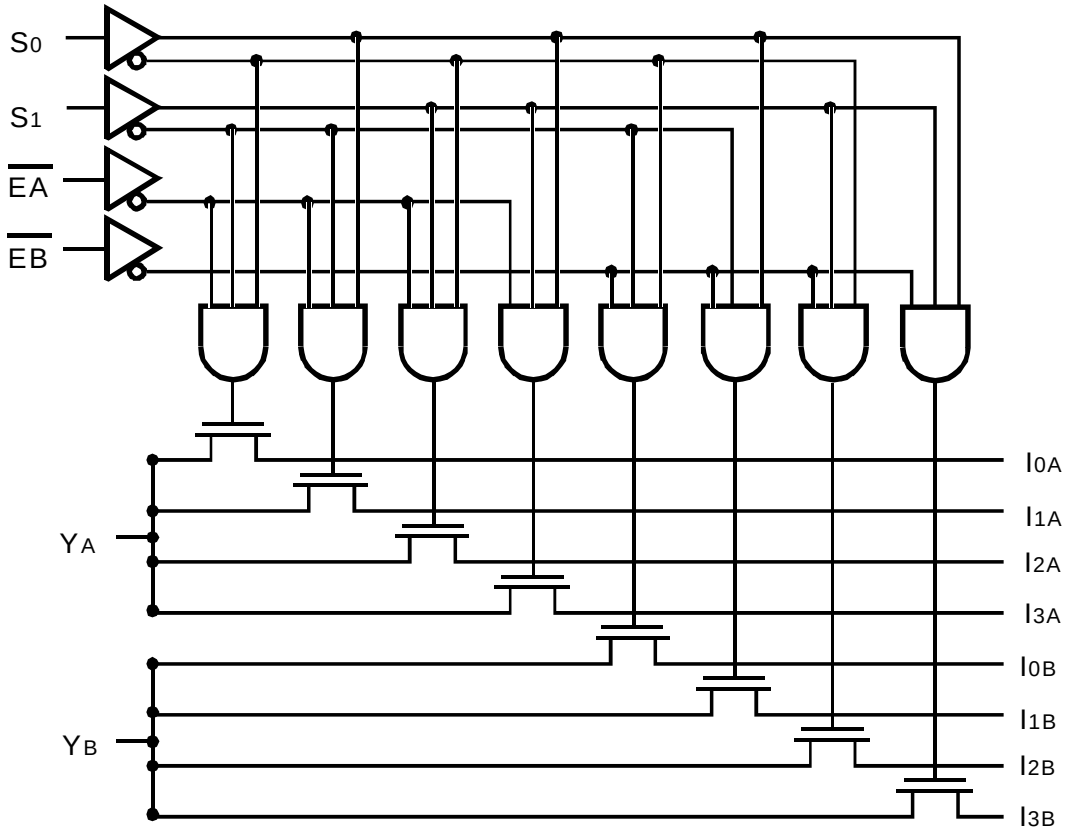

The IDT logo is a registered trademark of Integrated Device Technology, Inc.

© 2001 Integrated Device Technology, Inc.

PIN CONFIGURATION

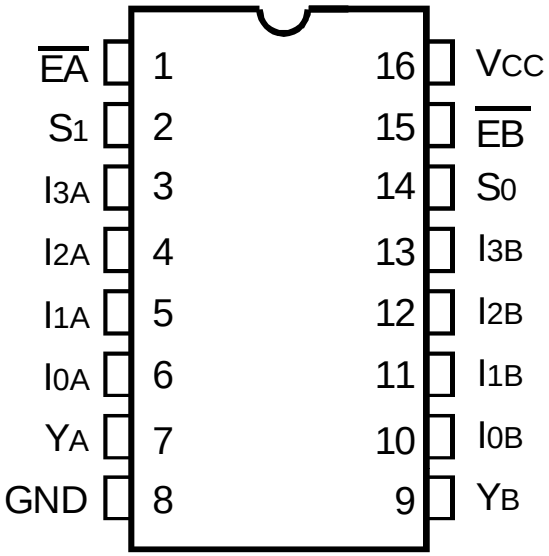

SOIC/ QSOP/ S1
TOP VIEW

ABSOLUTE MAXIMUM RATINGS(1)

Symbol	Description	Max	Unit
V_{TERM}(2)	Supply Voltage to Ground	–0.5 to +7	V
V_{TERM}(3)	DC Switch Voltage Vs	–0.5 to +7	V
V_{TERM}(3)	DC Input Voltage V_{IN}	–0.5 to +7	V
V_{AC}	AC Input Voltage (pulse width ≤ 20ns)	–3	V
I_{OUT}	DC Output Current	120	mA
P_{MAX}	Maximum Power Dissipation (T_A = 85°C)	0.5	W
T_{STG}	Storage Temperature	–65 to +150	°C

NOTE:
1. Stresses greater than those listed under ABSOLUTE MAXIMUM RATINGS may cause permanent damage to the device. This is a stress rating only and functional operation of the device at these or any other conditions above those indicated in the operational sections of this specification is not implied. Exposure to absolute maximum rating conditions for extended periods may affect reliability.
2. Vcc terminals.
3. All terminals except Vcc.

CAPACITANCE (T_A = +25°C, f = 1MHz, V_{IN} = 0V, V_{OUT} = 0V)

Pins		Typ.	Max.(1)	Unit
Control Inputs		4	5	pF
Quickswitch Channels (Switch OFF)	Demux	5	7	pF
	Mux	14	16	

NOTE:
1. This parameter is guaranteed but not production tested.

PIN DESCRIPTION

Pin Names	I/O	Description
Ixx	I	Data Inputs
S_0 - S_2	I	Select Inputs
$\overline{EA}$, $\overline{EB}$	I	Enable Input
YA, YB	O	Data Output

FUNCTION TABLE(1)

Enable		Select		Outputs		
$\overline{EA}$	$\overline{EB}$	S_1	S_0	Y_A	Y_B	Function
H	X	X	X	Hi-Z	X	Disconnected
X	H	X	X	X	Hi-Z	Disconnected
L	L	L	L	I_{0A}	I_{0B}	S_{1-0} = 0
L	L	L	H	I_{1A}	I_{1B}	S_{1-0} = 1
L	L	H	L	I_{2A}	I_{2B}	S_{1-0} = 2
L	L	H	H	I_{3A}	I_{3B}	S_{1-0} = 3

NOTE:
1. H = HIGH Voltage Level
   L = LOW Voltage Level
   X = Don't Care
   Z = High-Impedence

DC ELECTRICAL CHARACTERISTICS OVER OPERATING RANGE

Following Conditions Apply Unless Otherwise Specified:
Industrial: T_A = –40°C to +85°C, V_{CC} = 5.0V ±5%

Symbol	Parameter	Test Conditions	Min.	Typ.[1]	Max.	Unit
V_{IH}	Input HIGH Level	Guaranteed Logic HIGH for Control Pins	2	—	—	V
V_{IL}	Input LOW Level	Guaranteed Logic LOW for Control Pins	—	—	0.8	V
I_{IN}	Input LeakageCurrent (Control Inputs)	$0V \le V_{IN} \le V_{CC}$	—	—	±1	µA
I_{OZ}	Off-State Output Current (Hi-Z)	$0V \le V_{OUT} \le V_{CC}$	—	—	±1	µA
R_{ON}	Switch ON Resistance	V_{CC} = Min., V_{IN} = 0V, I_{ON} = 30mA	—	5	7	Ω
		V_{CC} = Min., V_{IN} = 2.4V, I_{ON} =15mA	—	10	15	
V_P	Pass Voltage[2]	V_{IN} = V_{CC} = 5V, I_{OUT} = -5µA	3.7	4	4.2	V

NOTES:
1. Typical values are at V_{CC} = 5.0V, T_A = 25°C.
2. Pass Voltage is guaranteed but not production tested.

TYPICAL ON RESISTANCE vs V_{IN} AT V_{CC} = 5V

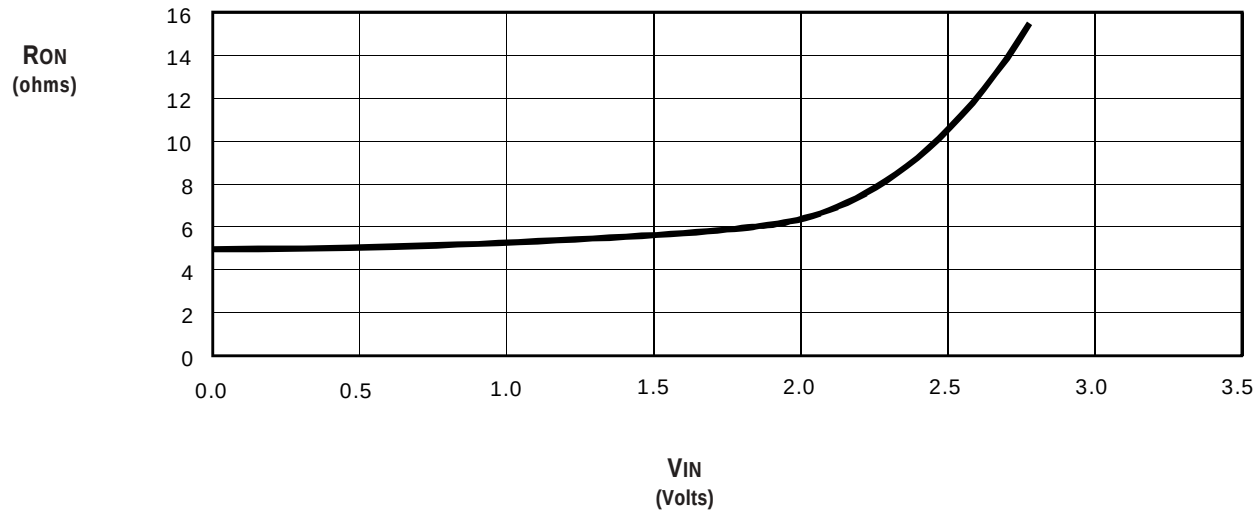

POWER SUPPLY CHARACTERISTICS

Symbol	Parameter	Test Conditions[1]	Max.	Unit
I_{CCQ}	Quiescent Power Supply Current	V_{CC} = Max., V_{IN} = GND or Vcc, f = 0	3	µA
ΔI_{CC}	Power Supply Current per Control Input HIGH [2]	V_{CC} = Max., V_{IN} = 3.4V, f = 0	1.5	mA
I_{CCD}	Dynamic Power Supply Current per MHz[3]	V_{CC} = Max., I and Y pins open Control Inputs Toggling at 50% Duty Cycle	0.25	mA/MHz

NOTES:
1. For conditions shown as Min. or Max., use the appropriate values specified under DC Electrical Characteristics.
2. Per TLL driven input (V_{IN} = 3.4V, control inputs only). I and Y pins do not contribute to ΔI_{CC}.
3. This current applies to the control inputs only and represents the current required to switch internal capacitance at the specified frequency. The I and Y inputs generate no significant AC or DC currents as they transition. This parameter is guaranteed but not production tested.

SWITCHING CHARACTERISTICS OVER OPERATING RANGE

T_A = -40°C to +85°C, V_{CC} = 5.0V ± 5%;

C_{LOAD} = 50pF, R_{LOAD} = 500Ω unless otherwise noted.

Symbol	Parameter	Min.[1]	Typ.	Max.	Unit
t_{PLH} t_{PHL}	Data Propagation Delay[2,3] Ix to Y	—	—	0.25	ns
t_{PZL} t_{PZH}	Switch Turn-on Delay Sx to Y	0.5	—	6.6	ns
t_{PZL} t_{PZH}	Switch Turn-on Delay $\overline{Ex}$ to Y	0.5	—	6	ns
t_{PLZ} t_{PHZ}	Switch Turn-off Delay[2] $\overline{Ex}$ to Y, Sx to Y	0.5	—	6	ns

NOTES:
1. Minimums are guaranteed but not production tested.
2. This parameter is guaranteed but not production tested.
3. The bus switch contributes no propagation delay other than the RC delay of the ON resistance of the switch and the load capacitance. The time constant for the switch alone is of the order of 0.25ns for C_L = 50pF. Since this time constant is much smaller than the rise and fall times of typical driving signals, it adds very little propagation delay to the system. Propagation delay of the bus switch, when used in a system, is determined by the driving circuit on the driving side of the switch and its interaction with the load on the driven side.

ORDERING INFORMATION

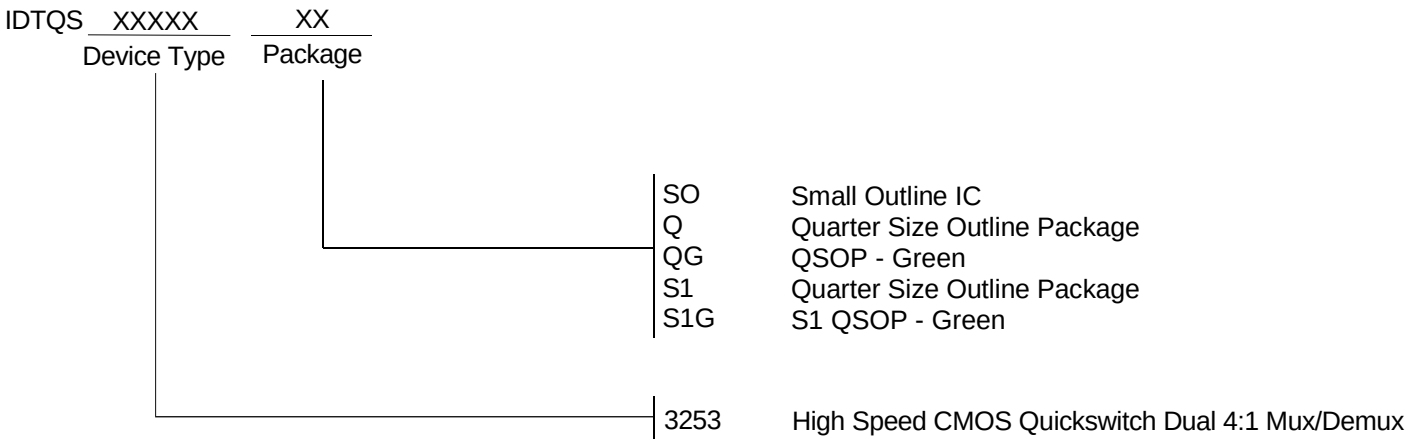

CORPORATE HEADQUARTERS
2975 Stender Way
Santa Clara, CA 95054

for SALES:
800-345-7015 or 408-727-6116
fax: 408-492-8674
www.idt.com

for Tech Support:
logichelp@idt.com
(408) 654-6459