Integrated Device Technology, Inc.

FAST CMOS BUS INTERFACE LATCHES

IDT54/74FCT841AT/BT/CT/DT

FEATURES:

- **Common features:**
  - Low input and output leakage ≤1µA (max.)
  - CMOS power levels
  - True TTL input and output compatibility
    - V_{OH} = 3.3V (typ.)
    - V_{OL} = 0.3V (typ.)
  - Meets or exceeds JEDEC standard 18 specifications
  - Product available in Radiation Tolerant and Radiation Enhanced versions
  - Military product compliant to MIL-STD-883, Class B and DESC listed (dual marked)
  - Available in DIP, SOIC, SSOP, QSOP, CERPACK and LCC packages
- **Features for FCT841T:**
  - A, B, C and D speed grades
  - High drive outputs (-15mA I_{OH}, 48mA I_{OL})
  - Power off disable outputs permit “live insertion”

DESCRIPTION:

The FCT8xxT series is built using an advanced dual metal CMOS technology.

The FCT8xxT bus interface latches are designed to eliminate the extra packages required to buffer existing latches and provide extra data width for wider address/data paths or buses carrying parity. The FCT841T are buffered, 10-bit wide versions of the popular FCT373T function. They are ideal for use as an output port requiring high I_{OL}/I_{OH}.

All of the FCT8xxT high-performance interface family can drive large capacitive loads, while providing low-capacitance bus loading at both inputs and outputs. All inputs have clamp diodes to ground and all outputs are designed for low-capacitance bus loading in high-impedance state.

FUNCTIONAL BLOCK DIAGRAM

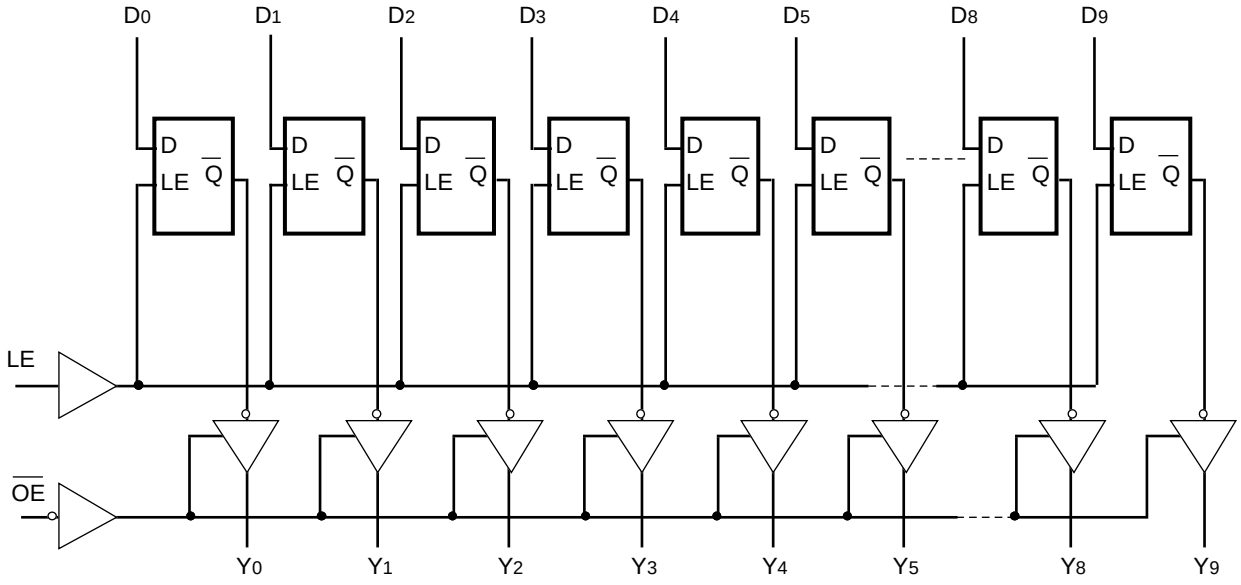

2571 drw 01

The IDT logo is a registered trademark of Integrated Device Technology, Inc.

©1996 Integrated Device Technology, Inc.

PIN CONFIGURATIONS

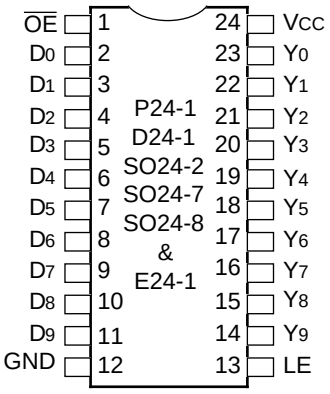

DIP/SOIC/SSOP/QSOP/CERPACK
TOP VIEW

2571 drw 02

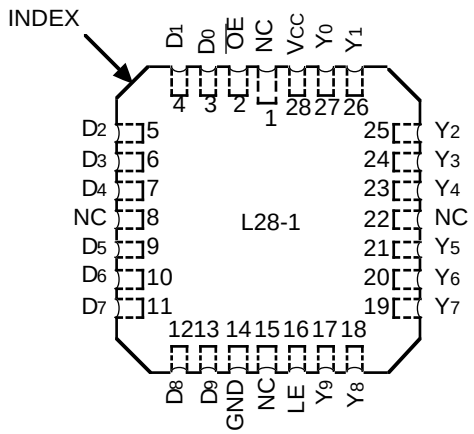

LCC
TOP VIEW

2571 drw 03

PIN DESCRIPTION

Name	I/O	Description
D_I	I	The latch data inputs.
LE	I	The latch enable input. The latches are transparent when LE is HIGH. Input data is latched on the HIGH-to-LOW transition.
Y_I	O	The 3-state latch outputs.
$\overline{OE}$	I	The output enable control. When $\overline{OE}$ is LOW, the outputs are enabled. When $\overline{OE}$ is HIGH, the outputs V_I are in high-impedance (off) state.

2571 tbl 01

FUNCTION TABLE(1)

Inputs			Internal	Output	
$\overline{OE}$	LE	D_I	Q_I	Y_I	Function
H	H	L	L	Z	High Z
H	H	H	H	Z	High Z
H	L	X	NC	Z	Latched (High Z)
L	H	L	L	L	Transparent
L	H	H	H	H	Transparent
L	L	X	NC	NC	Latched

NOTE:
1. H = HIGH, L = LOW, X = Don't Care, NC = No Change, Z = High Impedance

2571 tbl 02

ABSOLUTE MAXIMUM RATINGS(1)

Symbol	Rating	Commercial	Military	Unit
V_{TERM}(2)	Terminal Voltage with Respect to GND	–0.5 to +7.0	–0.5 to +7.0	V
V_{TERM}(3)	Terminal Voltage with Respect to GND	–0.5 to V_{CC} +0.5	–0.5 to V_{CC} +0.5	V
T_A	Operating Temperature	0 to +70	–55 to +125	°C
T_{BIAS}	Temperature Under Bias	–55 to +125	–65 to +135	°C
T_{STG}	Storage Temperature	–55 to +125	–65 to +150	°C
P_T	Power Dissipation	0.5	0.5	W
I_{OUT}	DC Output Current	–60 to +120	–60 to +120	mA

NOTES:

2571 lnk 03

1. Stresses greater than those listed under ABSOLUTE MAXIMUM RATINGS may cause permanent damage to the device. This is a stress rating only and functional operation of the device at these or any other conditions above those indicated in the operational sections of this specification is not implied. Exposure to absolute maximum rating conditions for extended periods may affect reliability. No terminal voltage may exceed V_{CC} by +0.5V unless otherwise noted.
2. Input and V_{CC} terminals only.
3. Outputs and I/O terminals only.

CAPACITANCE (T_A = +25°C, f = 1.0MHz)

Symbol	Parameter(1)	Conditions	Typ.	Max.	Unit
C_{IN}	Input Capacitance	V_{IN} = 0V	6	10	pF
C_{OUT}	Output Capacitance	V_{OUT} = 0V	8	12	pF

NOTE:
1. This parameter is measured at characterization but not tested.

2571 lnk 04

DC ELECTRICAL CHARACTERISTICS OVER OPERATING RANGE

Following Conditions Apply Unless Otherwise Specified:
Commercial: T_A = 0°C to +70°C, V_{CC} = 5.0V ± 5%; Military: T_A = –55°C to +125°C, V_{CC} = 5.0V ± 10%

Symbol	Parameter	Test Conditions[1]		Min.	Typ.[2]	Max.	Unit
V_{IH}	Input HIGH Level	Guaranteed Logic HIGH Level		2.0	—	—	V
V_{IL}	Input LOW Level	Guaranteed Logic LOW Level		—	—	0.8	V
I_{IH}	Input HIGH Current[4]	V_{CC} = Max.	V_I = 2.7V	—	—	±1	µA
I_{IL}	Input LOW Current[4]		V_I = 0.5V	—	—	±1	
I_{OZH}	High Impedance Output Current	V_{CC} = Max.	V_O = 2.7V	—	—	±1	µA
I_{OZL}	(3-State Output pins)[4]		V_O = 0.5V	—	—	±1	
I_I	Input HIGH Current[4]	V_{CC} = Max., V_I = V_{CC} (Max.)		—	—	±1	µA
V_{IK}	Clamp Diode Voltage	V_{CC} = Min., I_{IN} = –18mA		—	–0.7	–1.2	V
V_H	Input Hysteresis	—		—	200	—	mV
I_{CC}	Quiescent Power Supply Current	V_{CC} = Max., V_{IN} = GND or V_{CC}		—	0.01	1	mA

2571 lnk 05

OUTPUT DRIVE CHARACTERISTICS FOR FCT841T

Symbol	Parameter	Test Conditions[1]		Min.	Typ.[2]	Max.	Unit
V_{OH}	Output HIGH Voltage	V_{CC} = Min. V_{IN} = V_{IH} or V_{IL}	I_{OH} = –6mA MIL. I_{OH} = –8mA COM'L.	2.4	3.3	—	V
			I_{OH} = –12mA MIL. I_{OH} = –15mA COM'L.	2.0	3.0	—	V
V_{OL}	Output LOW Voltage	V_{CC} = Min. V_{IN} = V_{IH} or V_{IL}	I_{OL} = 32mA MIL. I_{OL} = 48mA COM'L.	—	0.3	0.5	V
I_{OS}	Short Circuit Current	V_{CC} = Max., V_O = GND[3]		–60	–120	–225	mA
I_{OFF}	Input/Output Power Off Leakage[5]	V_{CC} = 0V, V_{IN} or V_O ≤ 4.5V		—	—	±1	µA

2571 lnk 06

NOTES:

1. For conditions shown as Max. or Min., use appropriate value specified under Electrical Characteristics for the applicable device type.
2. Typical values are at Vcc = 5.0V, +25°C ambient.
3. Not more than one output should be shorted at one time. Duration of the short circuit test should not exceed one second.
4. The test limit for this parameter is ±5µA at T_A = –55°C.
5. This parameter is guaranteed but not tested.

POWER SUPPLY CHARACTERISTICS

Symbol	Parameter	Test Conditions[1]		Min.	Typ.[2]	Max.	Unit
ΔI_{CC}	Quiescent Power Supply Current TTL Inputs HIGH	V_{CC} = Max. V_{IN} = 3.4V[3]		—	0.5	2.0	mA
I_{CCD}	Dynamic Power Supply Current[4]	V_{CC} = Max. Outputs Open $\overline{OE}$ = GND LE = V_{CC} One Input Toggling 50% Duty Cycle	V_{IN} = V_{CC} V_{IN} = GND	—	0.15	0.25	mA/ MHz
I_C	Total Power Supply Current[6]	V_{CC} = Max. Outputs Open fi = 10MHz	V_{IN} = V_{CC} V_{IN} = GND	—	1.5	3.5	mA
		50% Duty Cycle $\overline{OE}$ = GND LE = V_{CC} One Bit Toggling	V_{IN} = 3.4 V_{IN} = GND	—	1.8	4.5	
		V_{CC} = Max. Outputs Open fi = 2.5MHz	V_{IN} = V_{CC} V_{IN} = GND	—	3.0	6.0[5]	
		50% Duty Cycle $\overline{OE}$ = GND LE = V_{CC} Eight Bits Toggling	V_{IN} = 3.4 V_{IN} = GND	—	5.0	14.0[5]	

2571 tbl 07

NOTES:

1. For conditions shown as Max. or Min., use appropriate value specified under Electrical Characteristics for the applicable device type.
2. Typical values are at V_{CC} = 5.0V, +25°C ambient.
3. Per TTL driven input (V_{IN} = 3.4V). All other inputs at V_{CC} or GND.
4. This parameter is not directly testable, but is derived for use in Total Power Supply Calculations.
5. Values for these conditions are examples of the I_{CC} formula. These limits are guaranteed but not tested.
6. $I_C = I_{QUIESCENT} + I_{INPUTS} + I_{DYNAMIC}$
   $I_C = I_{CC} + \Delta I_{CC} D_H N_T + I_{CCD} (f_{CP}/2 + f_i N_i)$
   I_{CC} = Quiescent Current
   ΔI_{CC} = Power Supply Current for a TTL High Input (V_{IN} = 3.4V)
   D_H = Duty Cycle for TTL Inputs High
   N_T = Number of TTL Inputs at D_H
   I_{CCD} = Dynamic Current Caused by an Input Transition Pair (HLH or LHL)
   f_{CP} = Clock Frequency for Register Devices (Zero for Non-Register Devices)
   f_i = Input Frequency
   N_i = Number of Inputs at f_i
   All currents are in milliamps and all frequencies are in megahertz.

SWITCHING CHARACTERISTICS OVER OPERATING RANGE

			FCT841AT				FCT841BT				
			Com'l.		Mil.		Com'l.		Mil.		
Symbol	Parameter	Conditions[1]	Min.[2]	Max.	Min.[2]	Max.	Min.[2]	Max.	Min.[2]	Max.	Unit
t_{PLH} t_{PHL}	Propagation Delay D_I to Y_I (LE = HIGH)	C_L = 50pF R_L = 500Ω	1.5	9.0	1.5	10.0	1.5	6.5	1.5	7.5	ns
		C_L = 300pF[4] R_L = 500Ω	1.5	13.0	1.5	15.0	1.5	13.0	1.5	15.0	
t_{PLH} t_{PHL}	Propagation Delay LE to Y_I	C_L = 50pF R_L = 500Ω	1.5	12.0	1.5	13.0	1.5	8.0	1.5	10.5	ns
		C_L = 300pF[4] R_L = 500Ω	1.5	16.0	1.5	20.0	1.5	15.5	1.5	18.0	
t_{PZH} t_{PZL}	Output Enable Time $\overline{OE}$ to Y_I	C_L = 50pF R_L = 500Ω	1.5	11.5	1.5	13.0	1.5	8.0	1.5	8.5	ns
		C_L = 300pF[4] R_L = 500Ω	1.5	23.0	1.5	25.0	1.5	14.0	1.5	15.0	
t_{PHZ} t_{PLZ}	Output Disable Time $\overline{OE}$ to Y_I	C_L = 5pF[4] R_L = 500Ω	1.5	7.0	1.5	9.0	1.5	6.0	1.5	6.5	ns
		C_L = 50pF R_L = 500Ω	1.5	8.0	1.5	10.0	1.5	7.0	1.5	7.5	
t_{SU}	Data to LE Set-up Time	C_L = 50pF R_L = 500Ω	2.5	—	2.5	—	2.5	—	2.5	—	ns
t_H	Data to LE Hold Time		2.5	—	3.0	—	2.5	—	2.5	—	ns
t_W	LE Pulse Width HIGH[3]		4.0	—	5.0	—	4.0	—	4.0	—	ns

NOTES:
1. See test circuit and waveforms.
2. Minimum limits are guaranteed but not tested on Propagation Delays.
3. These parameters are guaranteed but not tested.
4. These conditions are guaranteed but not tested.

2571 tbl 08

SWITCHING CHARACTERISTICS OVER OPERATING RANGE

			FCT841CT				FCT841DT				
			Com'l.		Mil.		Com'l.		Mil.		
Symbol	Parameter	Conditions[1]	Min.[2]	Max.	Min.[2]	Max.	Min.[2]	Max.	Min.[2]	Max.	Unit
t_{PLH} t_{PHL}	Propagation Delay D_I to Y_I (LE = HIGH)	C_L = 50pF R_L = 500Ω	1.5	5.5	1.5	6.3	1.5	4.2	—	—	ns
		C_L = 300pF[4] R_L = 500Ω	1.5	13.0	1.5	15.0	1.5	8.0	—	—	
t_{PLH} t_{PHL}	Propagation Delay LE to Y_I	C_L = 50pF R_L = 500Ω	1.5	6.4	1.5	6.8	1.5	4.0	—	—	ns
		C_L = 300pF[4] R_L = 500Ω	1.5	15.0	1.5	16.0	1.5	8.0	—	—	
t_{PZH} t_{PZL}	Output Enable Time $\overline{OE}$ to Y_I	C_L = 50pF R_L = 500Ω	1.5	6.5	1.5	7.3	1.5	4.8	—	—	ns
		C_L = 300pF[4] R_L = 500Ω	1.5	12.0	1.5	13.0	1.5	9.0	—	—	
t_{PHZ} t_{PLZ}	Output Disable Time $\overline{OE}$ to Y_I	C_L = 5pF[4] R_L = 500Ω	1.5	5.7	1.5	6.0	1.5	4.0	—	—	ns
		C_L = 50pF R_L = 500Ω	1.5	6.0	1.5	6.3	1.5	4.0	—	—	
t_{SU}	Data to LE Set-up Time	C_L = 50pF R_L = 500Ω	2.5	—	2.5	—	1.5	—	—	—	ns
t_H	Data to LE Hold Time		2.5	—	2.5	—	1.0	—	—	—	ns
t_W	LE Pulse Width HIGH[3]		4.0	—	4.0	—	3.0	—	—	—	ns

NOTES:
1. See test circuit and waveforms.
2. Minimum limits are guaranteed but not tested on Propagation Delays.
3. These parameters are guaranteed but not tested.
4. These conditions are guaranteed but not tested.

2571 tbl 09

TEST CIRCUITS AND WAVEFORMS

TEST CIRCUITS FOR ALL OUTPUTS

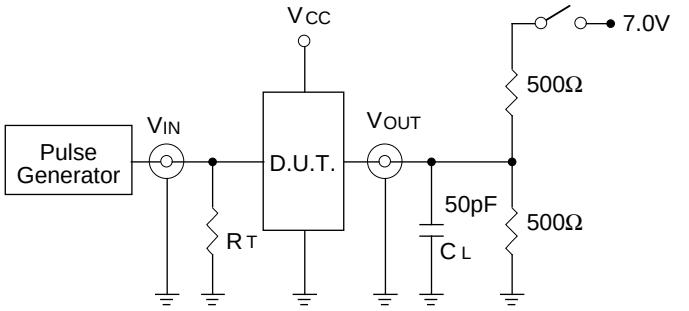

2571 drw 04

SWITCH POSITION

Test	Switch
Open Drain Disable Low Enable Low	Closed
All Other Tests	Open

2571 lnk 11

DEFINITIONS:

C_L= Load capacitance: includes jig and probe capacitance.
R_T = Termination resistance: should be equal to Z_{OUT} of the Pulse Generator.

SET-UP, HOLD AND RELEASE TIMES

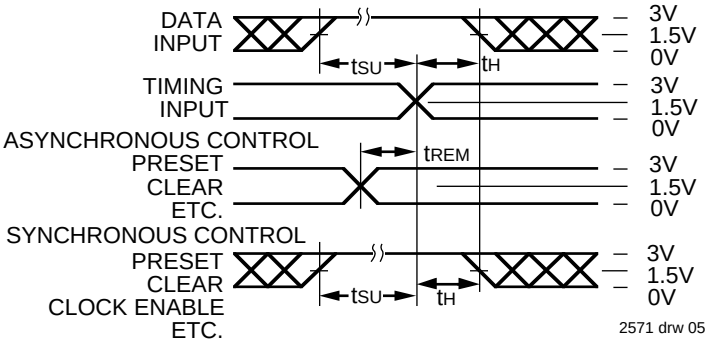

2571 drw 05

PULSE WIDTH

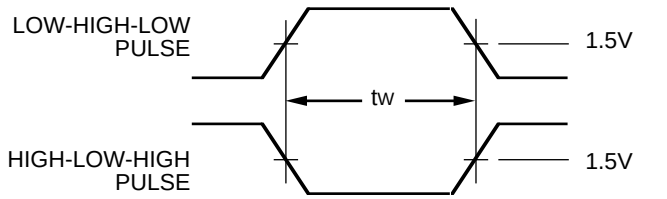

2571 drw 06

PROPAGATION DELAY

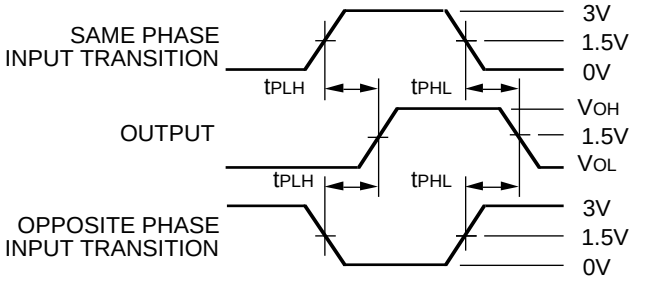

2571 drw 07

ENABLE AND DISABLE TIMES

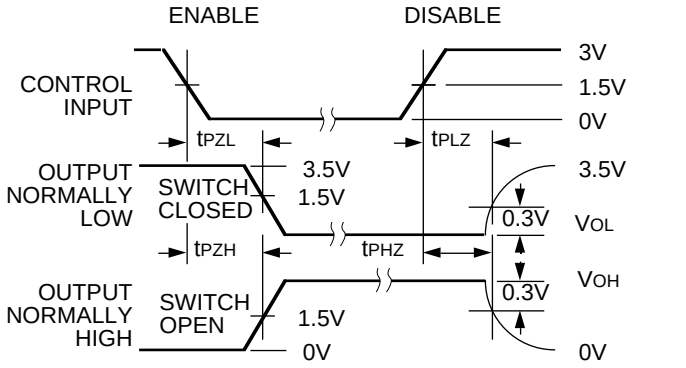

2571 drw 08

NOTES:

1. Diagram shown for input Control Enable-LOW and input Control Disable-HIGH
2. Pulse Generator for All Pulses: Rate ≤ 1.0MHz; t_F ≤ 2.5ns; t_R ≤ 2.5ns

ORDERING INFORMATION

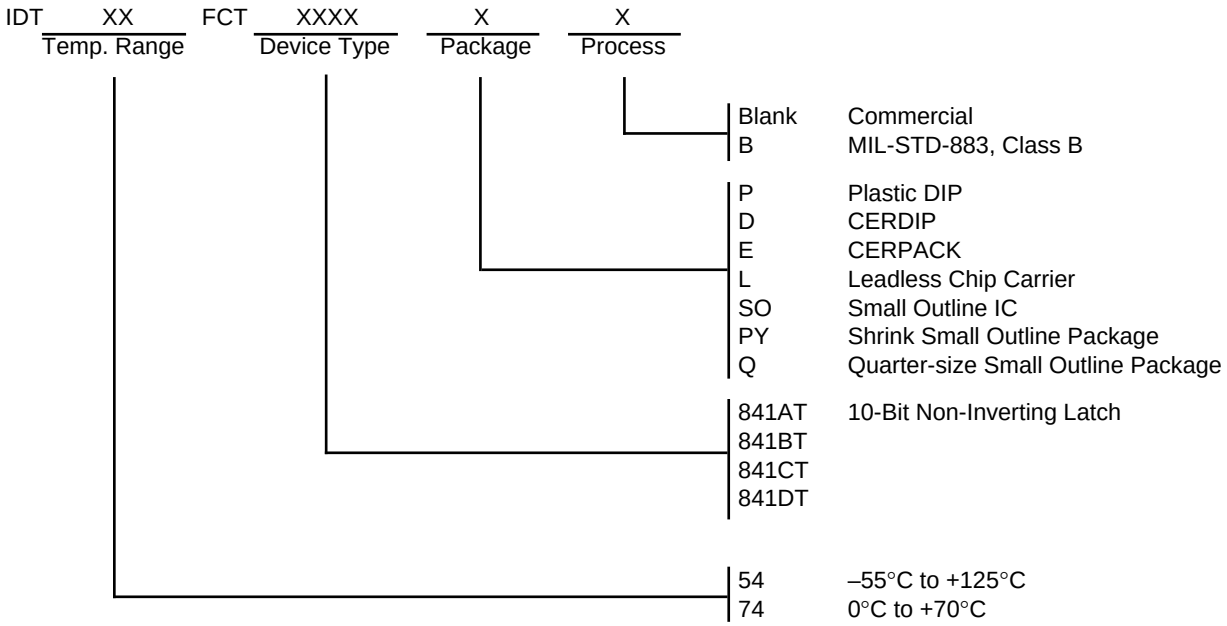

2571 drw 09