3.3V CMOS HEX INVERTER

IDT74ALVC04

FEATURES:

- **0.5 MICRON CMOS Technology**
- **ESD > 2000V per MIL-STD-883, Method 3015; > 200V using machine model (C = 200pF, R = 0)**
- **Vcc = 3.3V ± 0.3V, Normal Range**
- **Vcc = 2.7V to 3.6V, Extended Range**
- **Vcc = 2.5V ± 0.2V**
- **CMOS power levels (0.4µ W typ. static)**
- **Rail-to-Rail output swing for increased noise margin**
- **Available in SOIC, SSOP, and TSSOP packages**

DESCRIPTION:

This hex inverter is built using advanced dual metal CMOS technology. The ALVC04 contains six independent inverters and performs the Boolean function $Y = \overline{A}$.

The ALVC04 has been designed with a ±24mA output driver. This driver is capable of driving a moderate to heavy load while maintaining speed performance.

DRIVE FEATURES:

- **High Output Drivers: ±24mA**
- **Suitable for Heavy Loads**

APPLICATIONS:

- **3.3V high speed systems**
- **3.3V and lower voltage computing systems**

FUNCTIONAL BLOCK DIAGRAM

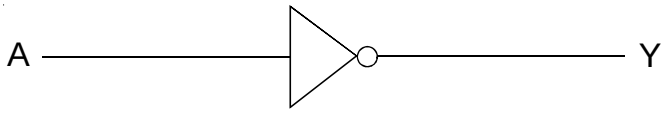

PIN CONFIGURATION

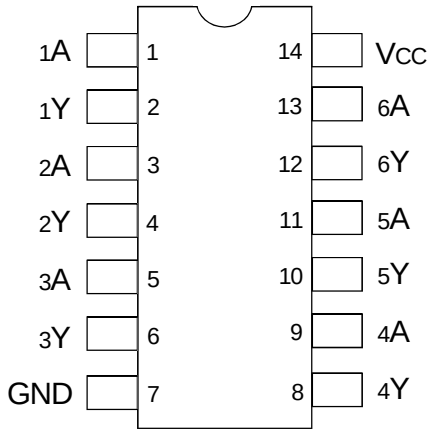

SOIC/ SSOP/ TSSOP
TOP VIEW

PIN DESCRIPTION

Pin Names	Description
x A	Data Inputs
x Y	Data Outputs

FUNCTION TABLE (EACH INVERTER)(1)

Input	Output
xA	**xY**
H	L
L	H

NOTE:
1. H = HIGH Voltage Level
   L = LOW Voltage Level

The IDT logo is a registered trademark of Integrated Device Technology, Inc.

©2000 Integrated Device Technology, Inc.

ABSOLUTE MAXIMUM RATINGS(1)

Symbol	Description	Max	Unit
V_{TERM}(2)	Terminal Voltage with Respect to GND	–0.5 to +4.6	V
V_{TERM}(3)	Terminal Voltage with Respect to GND	–0.5 to V_{CC}+0.5	V
T_{STG}	Storage Temperature	–65 to +150	°C
I_{OUT}	DC Output Current	–50 to +50	mA
I_{IK}	Continuous Clamp Current, V_I < 0 or V_I > V_{CC}	±50	mA
I_{OK}	Continuous Clamp Current, V_O < 0	–50	mA
I_{CC} I_{SS}	Continuous Current through each V_{CC} or GND	±100	mA

NOTES:
1. Stresses greater than those listed under ABSOLUTE MAXIMUM RATINGS may cause permanent damage to the device. This is a stress rating only and functional operation of the device at these or any other conditions above those indicated in the operational sections of this specification is not implied. Exposure to absolute maximum rating conditions for extended periods may affect reliability.
2. V_{CC} terminals.
3. All terminals except V_{CC}.

CAPACITANCE (T_A = +25°C, F = 1.0MHz)

Symbol	Parameter(1)	Conditions	Typ.	Max.	Unit
C_{IN}	Input Capacitance	V_{IN} = 0V	5	7	pF
C_{OUT}	Output Capacitance	V_{OUT} = 0V	7	9	pF
$C_{I/O}$	I/O Port Capacitance	V_{IN} = 0V	7	9	pF

NOTE:
1. As applicable to the device type.

DC ELECTRICAL CHARACTERISTICS OVER OPERATING RANGE

Following Conditions Apply Unless Otherwise Specified:
Operating Condition: T_A = –40°C to +85°C

Symbol	Parameter	Test Conditions		Min.	Typ.(1)	Max.	Unit
V_{IH}	Input HIGH Voltage Level	V_{CC} = 2.3V to 2.7V		1.7	—	—	V
		V_{CC} = 2.7V to 3.6V		2	—	—	
V_{IL}	Input LOW Voltage Level	V_{CC} = 2.3V to 2.7V		—	—	0.7	V
		V_{CC} = 2.7V to 3.6V		—	—	0.8	
I_{IH}	Input HIGH Current	V_{CC} = 3.6V	V_I = V_{CC}	—	—	±5	µA
I_{IL}	Input LOW Current	V_{CC} = 3.6V	V_I = GND	—	—	±5	µA
I_{OZH}	High Impedance Output Current	V_{CC} = 3.6V	V_O = V_{CC}	—	—	±10	µA
I_{OZL}	(3-State Output pins)		V_O = GND	—	—	±10	
V_{IK}	Clamp Diode Voltage	V_{CC} = 2.3V, I_{IN} = –18mA		—	–0.7	–1.2	V
V_H	Input Hysteresis	V_{CC} = 3.3V		—	100	—	mV
I_{CCL} I_{CCH} I_{CCZ}	Quiescent Power Supply Current	V_{CC} = 3.6V V_{IN} = GND or V_{CC}		—	0.1	10	µA
ΔI_{CC}	Quiescent Power Supply Current Variation	One input at V_{CC} - 0.6V, other inputs at V_{CC} or GND		—	—	750	µA

NOTE:
1. Typical values are at V_{CC} = 3.3V, +25°C ambient.

OUTPUT DRIVE CHARACTERISTICS

Symbol	Parameter	Test Conditions[1]		Min.	Max.	Unit
V_{OH}	Output HIGH Voltage	V_{CC} = 2.3V to 3.6V	I_{OH} = – 0.1mA	V_{CC} – 0.2	—	V
		V_{CC} = 2.3V	I_{OH} = – 6mA	2	—	
		V_{CC} = 2.3V	I_{OH} = – 12mA	1.7	—	
		V_{CC} = 2.7V		2.2	—	
		V_{CC} = 3V		2.4	—	
		V_{CC} = 3V	I_{OH} = – 24mA	2	—	
V_{OL}	Output LOW Voltage	V_{CC} = 2.3V to 3.6V	I_{OL} = 0.1mA	—	0.2	V
		V_{CC} = 2.3V	I_{OL} = 6mA	—	0.4	
			I_{OL} = 12mA	—	0.7	
		V_{CC} = 2.7V	I_{OL} = 12mA	—	0.4	
		V_{CC} = 3V	I_{OL} = 24mA	—	0.55	

NOTE:
1. V_{IH} and V_{IL} must be within the min. or max. range shown in the DC ELECTRICAL CHARACTERISTICS OVER OPERATING RANGE table for the appropriate V_{CC} range. T_A = – 40°C to + 85°C.

OPERATING CHARACTERISTICS, T_A = 25°C

Symbol	Parameter	Test Conditions	Vcc = 2.5V ± 0.2V Typical	Vcc = 3.3V ± 0.3V Typical	Unit
C_{PD}	Power Dissipation Capacitance per Inverter	C_L = 0pF, f = 10Mhz	23	27.5	pF

SWITCHING CHARACTERISTICS[1]

Symbol	Parameter	Vcc = 2.5V ± 0.2V		Vcc = 2.7V		Vcc = 3.3V ± 0.3V		Unit
		Min.	Max.	Min.	Max.	Min.	Max.	
t_{PLH}	Propagation Delay	1	3.1	1	3.7	1	3.3	ns
t_{PHL}	xA to xY							

NOTE:
1. See TEST CIRCUITS AND WAVEFORMS. T_A = – 40°C to + 85°C.

TEST CIRCUITS AND WAVEFORMS

TEST CONDITIONS

Symbol	$V_{CC}^{(1)}$=3.3V±0.3V	$V_{CC}^{(1)}$=2.7V	$V_{CC}^{(2)}$=2.5V±0.2V	Unit
V_{LOAD}	6	6	2 x Vcc	V
V_{IH}	2.7	2.7	Vcc	V
V_T	1.5	1.5	Vcc / 2	V
V_{LZ}	300	300	150	mV
V_{HZ}	300	300	150	mV
C_L	50	50	30	pF

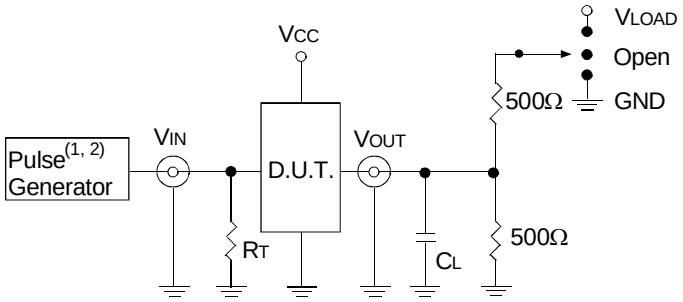

ALVC Quad Link

Test Circuit for All Outputs

DEFINITIONS:

C_L = Load capacitance: includes jig and probe capacitance.
R_T = Termination resistance: should be equal to Z_{OUT} of the Pulse Generator.

NOTES:

1. Pulse Generator for All Pulses: Rate ≤ 10MHz; t_F ≤ 2.5ns; t_R ≤ 2.5ns.
2. Pulse Generator for All Pulses: Rate ≤ 10MHz; t_F ≤ 2ns; t_R ≤ 2ns.

SWITCH POSITION

Test	Switch
Open Drain Disable Low Enable Low	V_{LOAD}
Disable High Enable High	GND
All Other Tests	Open

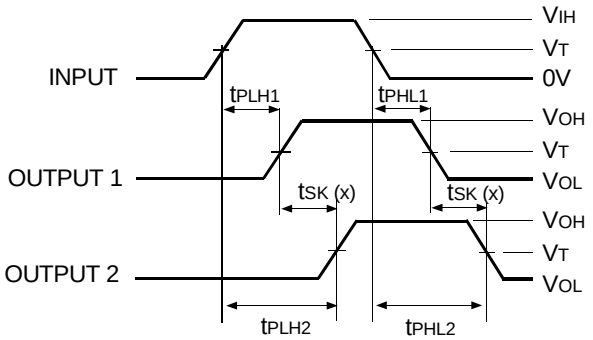

$t_{SK(x)} = |t_{PLH2} - t_{PLH1}|$ or $|t_{PHL2} - t_{PHL1}|$

ALVC Quad Link

Output Skew - $t_{SK(x)}$

NOTES:

1. For $t_{SK(o)}$ OUTPUT1 and OUTPUT2 are any two outputs.
2. For $t_{SK(b)}$ OUTPUT1 and OUTPUT2 are in the same bank.

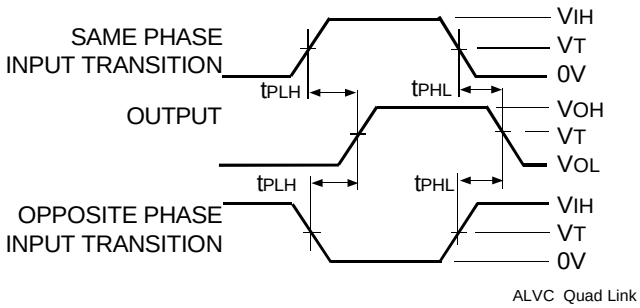

ALVC Quad Link

Propagation Delay

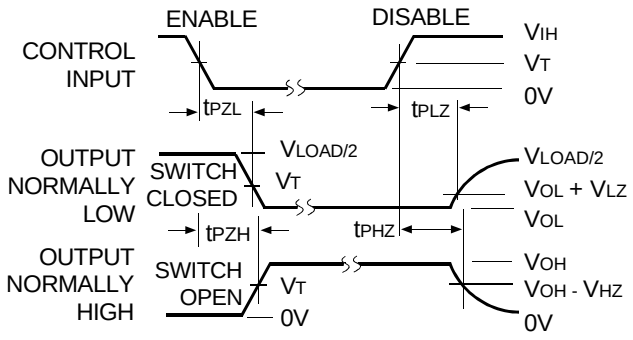

ALVC Quad Link

NOTE:

1. Diagram shown for input Control Enable-LOW and input Control Disable-HIGH.

Enable and Disable Times

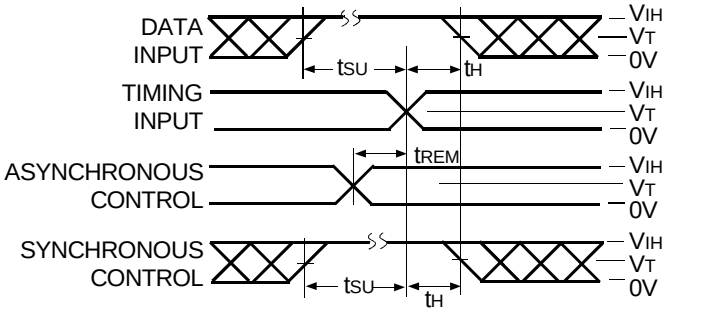

ALVC Quad Link

Set-up, Hold, and Release Times

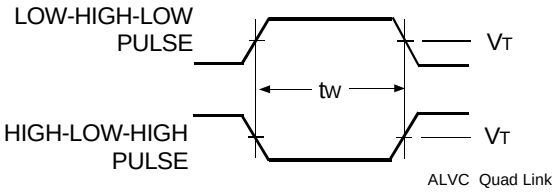

ALVC Quad Link

Pulse Width

ORDERING INFORMATION

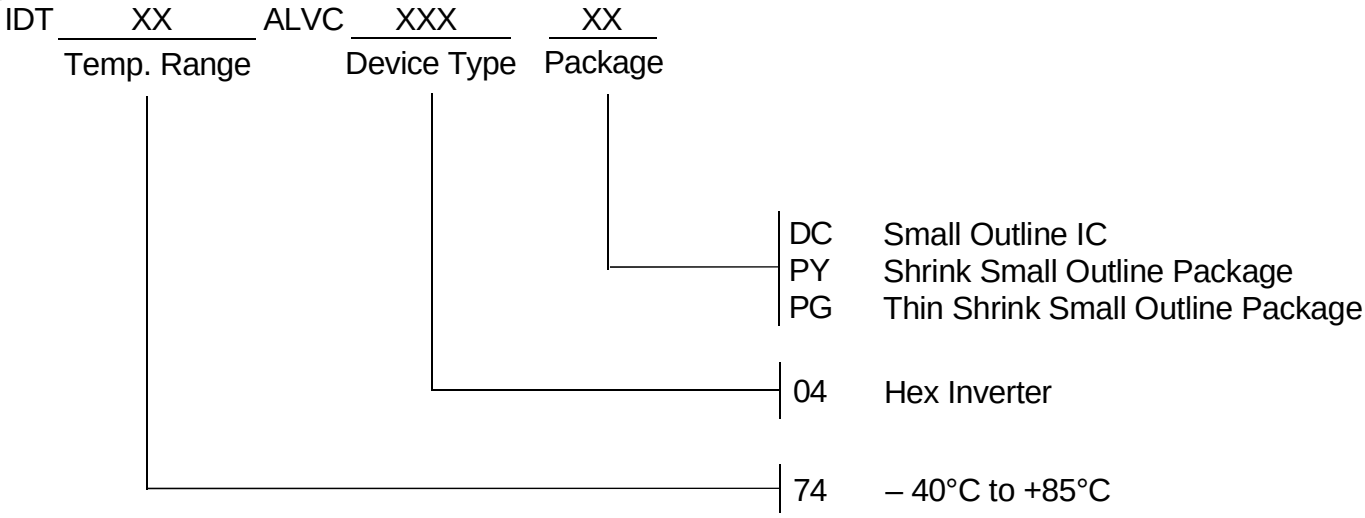

CORPORATE HEADQUARTERS
2975 Stender Way
Santa Clara, CA 95054

for SALES:
800-345-7015 or 408-727-6116
fax: 408-492-8674
www.idt.com

for Tech Support:
logichelp@idt.com
(408) 654-6459