FREESCALE P10XX AND P20XX SYSTEM CLOCK W/66.66M DDR CLOCK

IDT6V49205A

General Description

The IDT6V49205A is a main clock for Freescale P10xx and P20xx-based systems. It has a selectable System CCB clock and a 66.66MHz DDRCLK. The IDT6V49205A also provides LP-HCSL PCIe outputs for low power and reduced board space.

Output Features

- 1 - Sys_CCB 3.3V LVCMOS output @ 100M/83.33M/ 80M/66.66M
- 1 - DDRCLK 3.3V LVCMOS output @ 66.66M
- 1 - 125M 3.3V LVCMOS output
- 6 - LP-HCSL PCIe pairs selectable @ 100M or 125M
- 6 - 25MHz 3.3V LVCMOS outputs
- 2 - 2.048M 3.3V LVCMOS outputs
- 2 - USB 3.3V LVCMOS outputs @12M or 24M

Key Specifications

- PCIe Gen1-2-3 compliant
- <3p rms phase noise on REF outputs

Recommended Application

System Clock for Freescale P10xx and P20xx-based designs

Features

- Replaces 11 crystals, 2 oscillators and 3 clock generators; lowers cost, power and area
- Integrated terminations on LP-HCSL PCIe outputs; eliminate 24 resistors, saving 41mm^2 of board area
- Industrial temperature range operation; supports demanding environmental conditions
- Advanced 3.3V CMOS process; high-performance, low-power
- Supports independent spread spectrum on Sys_CCB/DDRCLK and PCIe outputs
- Packaged as 48-pin TSSOP, Pb-free, RoHS compliant

Block Diagram

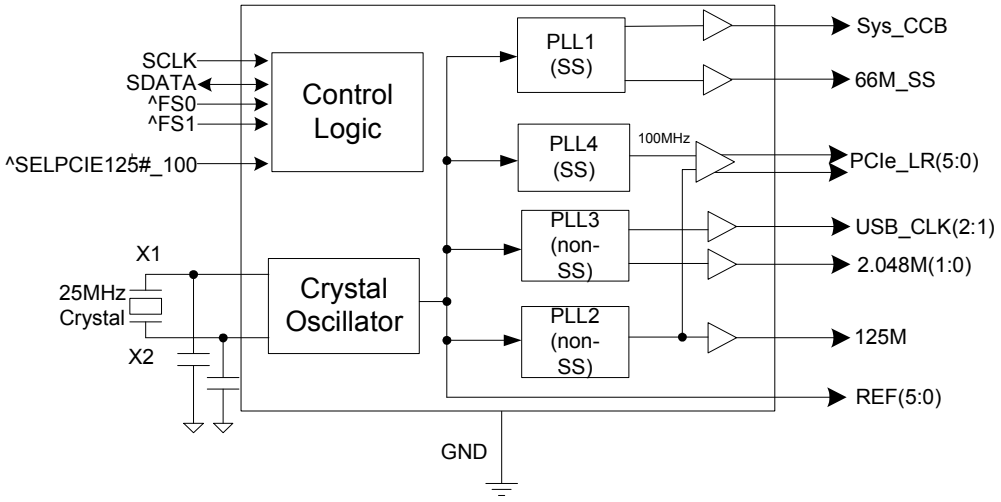

Pin Assignment

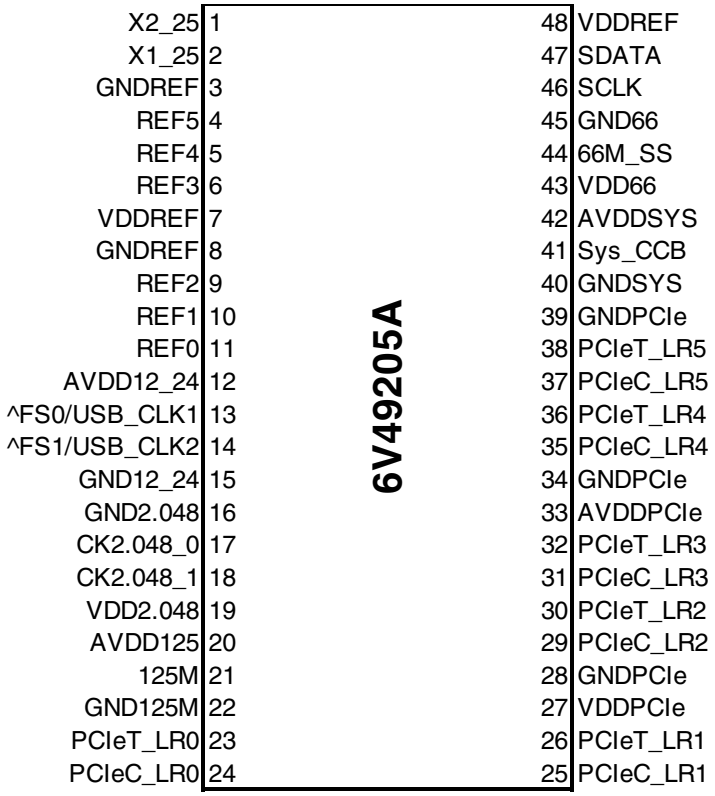

48-Pin TSSOP

^ Indicates Internal 100kohm pull up resistor

Pin Descriptions

PIN #	PIN NAME	PIN TYPE	DESCRIPTION
1	X2_25	OUT	Crystal output, Nominally 25.00MHz.
2	X1_25	IN	Crystal input, Nominally 25.00MHz.
3	GNDREF	PWR	Ground pin for the REF outputs.
4	REF5	OUT	Copy of crystal input
5	REF4	OUT	Copy of crystal input
6	REF3	OUT	Copy of crystal input
7	VDDREF	PWR	Ref, XTAL power supply, nominal 3.3V
8	GNDREF	PWR	Ground pin for the REF outputs.
9	REF2	OUT	Copy of crystal input
10	REF1	OUT	Copy of crystal input
11	REF0	OUT	Copy of crystal input
12	AVDD12_24	PWR	Power for 12_24MHz PLL core, and outputs. Nominal 3.3V
13	^FS0/USB_CLK 1	I/O	Frequency select latch for Sys_CCB / 12 or 24MHz USB clock output. 3.3V. This pin has an internal pull up resistor.
14	^FS1/USB_CLK 2	I/O	Frequency select latch for Sys_CCB / 12 or 24MHz USB clock output. 3.3V. This pin has an internal pull up resistor.
15	GND12_24	PWR	Ground pin for 12_24M outputs.
16	GND2.048	PWR	Ground pin for 2.048M outputs.
17	CK2.048_0	OUT	2.048M output, nominal 3.3V.
18	CK2.048_1	OUT	2.048M output, nominal 3.3V.
19	VDD2.048	PWR	Power supply for 2.048M outputs, nominal 3.3V.
20	AVDD125	PWR	Power for 125MHz PLL core and output, nominal 3.3V
21	125M	OUT	125M output, nominal 3.3V.
22	GND125M	PWR	Ground pin for 125M outputs.
23	PCIeT_LR0	OUT	True clock of 0.8V differential push-pull PCI_Express pair with integrated 33ohm series resistor
24	PCIeC_LR0	OUT	Complement clock of 0.8V differential push-pull PCI_Express pair with integrated 33ohm series resistor
25	PCIeC_LR1	OUT	Complement clock of 0.8V differential push-pull PCI_Express pair with integrated 33ohm series resistor
26	PCIeT_LR1	OUT	True clock of 0.8V differential push-pull PCI_Express pair with integrated 33ohm series resistor
27	VDDPCIe	PWR	Power supply for PCI Express outputs, nominal 3.3V
28	GNDPCIe	PWR	Ground pin for the PCIe outputs.
29	PCIeC_LR2	OUT	Complement clock of 0.8V differential push-pull PCI_Express pair with integrated 33ohm series resistor
30	PCIeT_LR2	OUT	True clock of 0.8V differential push-pull PCI_Express pair with integrated 33ohm series resistor
31	PCIeC_LR3	OUT	Complement clock of 0.8V differential push-pull PCI_Express pair with integrated 33ohm series resistor
32	PCIeT_LR3	OUT	True clock of 0.8V differential push-pull PCI_Express pair with integrated 33ohm series resistor
33	AVDDPCIe	PWR	Analog Power supply for PCI Express clocks, nominal 3.3V
34	GNDPCIe	PWR	Ground pin for the PCIe outputs.
35	PCIeC_LR4	OUT	Complement clock of 0.8V differential push-pull PCI_Express pair with integrated 33ohm series resistor
36	PCIeT_LR4	OUT	True clock of 0.8V differential push-pull PCI_Express pair with integrated 33ohm series resistor
37	PCIeC_LR5	OUT	Complement clock of 0.8V differential push-pull PCI_Express pair with integrated 33ohm series resistor
38	PCIeT_LR5	OUT	True clock of 0.8V differential push-pull PCI_Express pair with integrated 33ohm series resistor
39	GNDPCIe	PWR	Ground pin for the PCIe outputs.
40	GNDSYS	PWR	Ground pin for the Sys_CCB output
41	Sys_CCB	OUT	System CCB clock output
42	AVDDSYS	PWR	Analog Power supply for Sys_CCB clock and outputs, nominal 3.3V
43	VDD66	PWR	Power supply for 66.66M output(s), nominal 3.3V.
44	66M_SS	OUT	66.66M spread-spectrum capable output, nominal 3.3V
45	GND66	PWR	Ground pin for 66.66M output(s).
46	SCLK	IN	Clock pin of SMBus circuitry.
47	SDATA	I/O	Data pin for SMbus circuitry.
48	VDDREF	PWR	Ref, XTAL power supply, nominal 3.3V

Table 1: PCIEX Spread Table (selectable via SMBUS)

SELPCIE125#_100 B6b4	B0b4	B0b3	Spread %
0 (125MHz)	x	x	No Spread
1 (100MHz)	0	0	No Spread (default)
1 (100MHz)	0	1	Down -0.5%
1 (100MHz)	1	0	Down -0.75%
1 (100MHz)	1	1	No Spread

*Once in spread mode, do not return to non spread without reset

Table 2: Sys_CCB and DDR Spread Table (selectable via SMBUS)

B0b7	B0b6	B0b5	Spread %
0	0	0	No Spread (default)
0	0	1	Down -0.5%
0	1	0	Down -0.75%
0	1	1	Down -0.25%
1	0	0	Reserved
1	0	1	Reserved
1	1	0	Reserved
1	1	1	Reserved

Table 3: Sys_CCB Frequency Select Table (Latched and selectable via SMBUS)

FS1 / B4b3	FS0 / B4b2	Sys_CCB (MHz)
0	0	66.66
0	0	100
0	1	80
0	1	83.33

Table 4: PCI Express Amplitude Control

B6b7	B6b6	PCIe Amplitude
0	0	700mV
0	1	800mV
1	0	900mV
1	1	1000mV

Absolute Maximum Ratings

Stresses above the ratings listed below can cause permanent damage to the IDT6V49205A. These ratings, which are standard values for IDT commercially rated parts, are stress ratings only. Functional operation of the device at these or any other conditions above those indicated in the operational sections of the specifications is not implied. Exposure to absolute maximum rating conditions for extended periods can affect product reliability. Electrical parameters are guaranteed only over the recommended operating temperature range.

PARAMETER	SYMBOL	CONDITIONS	MIN	TYP	MAX	UNITS	Notes
Maximum Supply Voltage	VDDxxx	Supply Voltage			4.6	V	1
Maximum Input Voltage	V_{IH}	Referenced to GND			VDD + 0.5	V	1
Minimum Input Voltage	V_{IL}	Referenced to GND	GND - 0.5			V	1
Storage Temperature	Ts	-	-65		150	°C	
JunctionTemperature	Tj	-			125	°C	1
Input ESD protection	ESD prot	Human Body Model	2000			V	1

NOTES on Absolute Max Parameters

[1] Operation under these conditions is neither implied, nor guaranteed.

Electrical Characteristics - Input/Supply/Common Output DC Parameters

T_{AMB} = -40 to +85°C; V_{DD} = 3.3 V +/-5%, All outputs driving test loads (unless noted otherwise).

PARAMETER	SYMBOL	CONDITIONS	MIN	TYP	MAX	UNITS	Notes
Ambient Operating Temp	T_{AMB}	-	-40	25	85	°C	
Supply Voltage	VDDxxx	Supply Voltage	3.135	3.3	3.465	V	
Power supply Ramp Time	T_{PWRRMP}	Power supply ramp must be montonic			4	ms	
Latched Input High Voltage	V_{IH_LI}	Single-ended Latched Inputs	2.1		V_{DD} + 0.3	V	
Latched Input Low Voltage	V_{IL_LI}	Single-ended Latched Inputs	V_{SS} - 0.3		0.8	V	
Input Leakage Current	I_{IN}	V_{IN} = V_{DD} , V_{IN} = GND	-5		5	uA	2
Operating Supply Current	$I_{DDOP3.3}$	All outputs loaded and running		119	155	mA	
Input Frequency	F_i		23	25	27	MHz	3
Pin Inductance	L_{pin}			5	7	nH	
Input Capacitance	C_{IN}	Logic Inputs	1.5	3	5	pF	
	C_{OUT}	Output pin capacitance		5	6	pF	
	C_{INX}	X1 & X2 pins		5	6	pF	
Clk Stabilization	T_{STAB}	From VDD Power-Up or de-assertion of PD to 1st clock		3.2	5	ms	
Tfall_SE	T_{FALL}	Fall/rise time of all 3.3V control inputs from 20-80%			10	ns	1
Trise_SE	T_{RISE}				10	ns	1
SMBus Voltage	V_{DD}		2.7		3.3	V	
Low-level Output Voltage	V_{OLSMB}	@ I_{PULLUP}			0.4	V	
Current sinking at V_{OLSMB} = 0.4 V	I_{PULLUP}	SMB Data Pin	4			mA	
SCLK/SDATA Clock/Data Rise Time	T_{RI2C}	(Max VIL - 0.15) to (Min VIH + 0.15)			1000	ns	
SCLK/SDATA Clock/Data Fall Time	T_{FI2C}	(Min VIH + 0.15) to (Max VIL - 0.15)			300	ns	
Maximum SMBus Operating Frequency	F_{SMBUS}		100			kHz	

NOTES on DC Parameters: (unless otherwise noted, guaranteed by design and characterization, not 100% tested in production).

[1] Signal is required to be monotonic in this region.

[2] Input leakage current does not include inputs with pull-up or pull-down resistors

[3] For margining purposes only. Normal operation should have Fin =25MHz

AC Electrical Characteristics - Low Power HCSL-Compatible PCIe Outputs

PARAMETER	SYMBOL	CONDITIONS	MIN	TYP	MAX	UNITS	NOTES
Clock Frequency	f	Spread off		100.00		MHz	2,3
				125.00		MHz	2,3
Synthesis error	ppm_{SSoff}	PCIe 100MHz or 125MHz		0		ppm	1,2
	ppm_{SSon}	PCIe @ -0.5% spread, 100MHz only		+/-100		ppm	1,2
Rising/Falling Edge Slew Rate	t_{SLEW}	Differential Measurement	2.2	4.1	5.7	V/ns	1,3,6
Slew Rate Variation	t_{SLVAR}	Single-ended Measurement		1	20	%	1,6
Maximum Output Voltage	V_{HIGH}	Includes overshoot		793	1150	mV	6,7
Minimum Output Voltage	V_{LOW}	Includes undershoot	-300	-22		mV	6,7
Differential Voltage Swing	V_{SWING}	Differential Measurement	300			mV	1,6
Crossing Point Voltage	V_{XABS}	Single-ended Measurement	300	419	550	mV	1,4,6
Crossing Point Variation	$V_{XABSVAR}$	Single-ended Measurement		115	140	mV	1,4,5
Duty Cycle	D_{CYC}	Differential Measurement	45	50.1	55	%	1
PCIe Jitter - Cycle to Cycle	$PCIe_{JC2C}$	Differential Measurement		36	125	ps	1
PCIe[5:0] Skew	$T_{SKEwPCIe50}$	Differential Measurement		1172	1500	ps	1,6,8
Spread Spectrum Modulation Frequency	f_{SSMOD}	Triangular Modulation	30	31.5	33	kHz	

Notes for PCIe Clocks:

[1] Guaranteed by design and characterization, not 100% tested in production.

[2] Clock Frequency specifications are guaranteed assuming that REF is at 25MHz

[3] Slew rate measured through V_swing voltage range centered about differential zero

[4] Vcross is defined at the voltage where Clock = Clock#.

[5] Only applies to the differential rising edge (Clock rising, Clock# falling.)

[6] At default SMBus settings.

[7] The Freescale P-series CPU's have internal terminations on their SerDes Reference Clock inputs. The resulting amplitude at these inputs will be 1/2 of the values listed, which are well within the 800mV Freescale specification for these inputs.

[8] This value includes an intentional output-to-output skew of approximately 250ps.

Electrical Characteristics - Phase Jitter, PCIe Outputs at 100MHz

PARAMETER	SYMBOL	CONDITIONS	MIN	TYP	MAX	INDUSTRY SPEC LIMIT	UNITS	NOTES
Jitter, Phase	$t_{jphPCIe1}$	PCIe Gen 1 phase jitter		35	56	86	ps	1,2,3
	$t_{jphPCIe2Lo}$	PCIe Gen 2 phase jitter Lo-band content		1.6	2.4	3	ps (RMS)	1,2,3
	$t_{jphPCIe2Hi}$	PCIe Gen 2 phase jitter Hi-band content		1.9	2.8	3.1	ps (RMS)	1,2,3
	$t_{jphPCIe3}$	PCIe Gen 3 phase jitter		0.5	0.83	1	ps (RMS)	1,2,3

Notes on Phase Jitter:

[1] See http://www.pcisig.com for complete specs. Guaranteed by design and characterization, not tested in production.

[2] Sample size of at least 100K cycles. This figures extrapolates to 108ps pk-pk @ 1M cycles for a BER of 1^{-12}

[3] Applies to PCIe outputs @ default amplitude and 100MHz with spread off or at -0.5%.

Electrical Characteristics - DDR Clock

PARAMETER	SYMBOL	CONDITIONS	MIN	TYP	MAX	UNITS	NOTES
DDR Clock Frequency	f_{DDR}	V_T = OVDD/2 V		66.666		MHz	2,3,6
Synthesis error	ppm_{SSoff}	Spread off		0		ppm	1,2,5
	ppm_{SSon}	Spread on		+/-150		ppm	1,2,5
Output High Voltage	V_{OH}	V_{OH} at the selected operating frequency	2.4			V	1
Output Low Voltage	V_{OL}	V_{OL} at the selected operating frequency			0.4	V	1
Slew Rate VDDO = 3.3V	t_{SLEW00}	'00' = Hi-Z		Hi-Z		V/ns	
	t_{SLEW01}	'01' Slow Slew Rate (Averaging on)	1.1	1.6	2.3	V/ns	1,3,8
	t_{SLEW10}	'10' Fast Slew Rate (Averaging on)	1.6	2.3	3.2	V/ns	1,3,8
	t_{SLEW11}	'11' Fastest Slew Rate (Averaging on)	1.8	2.7	3.7	V/ns	1,3,8
Duty Cycle	d_{t1}	V_T = OVDD/2 V	40	51.4	60	%	1,6
Jitter, Peak period jitter	t_{jpeak}	V_T = OVDD/2 V		±96	±150	ps	1,6
Phase Noise	$t_{phasenoise}$	-56dBc		10	500	kHz	1,7
AC Input Swing Limits @ 3.3V OV_{DD}	ΔV_{AC}	This is the difference between VOL and VOH at the selected operating frequency.	1.9	3.4		V	1
Spread Spectrum Modulation Frequency	f_{SSMOD}	Triangular Modulation	30	32.3	60	kHz	

Electrical Characteristics - Sys_CCB

PARAMETER	SYMBOL	CONDITIONS	MIN	TYP	MAX	UNITS	NOTES
Clock Frequency	f_{Sys_CCB}	FS(1:0) = 00, VT = OVDD/2 V		66.666		MHz	2,3,6
		FS(1:0) = 01, VT = OVDD/2 V		100.00		MHz	2,3,6
		FS(1:0) = 10, VT = OVDD/2 V		80.00		MHz	2,3,6
		FS(1:0) = 11, VT = OVDD/2 V		83.333		MHz	2,3,6
Synthesis error	ppm_{SSoff}	Spread off		0		ppm	1,2,5
	ppm_{SSon}	Spread on		+/-150		ppm	1,2,5
Output High Voltage	V_{OH}	V_{OH} at the selected operating frequency	2.4			V	1
Output Low Voltage	V_{OL}	V_{OL} at the selected operating frequency			0.4	V	1
Slew Rate VDDO = 3.3V	t_{SLEW00}	'00' = Hi-Z		Hi-Z		V/ns	
	t_{SLEW01}	'01' Slow Slew Rate (Averaging on)	0.8	1.4	2.1	V/ns	1,3,8
	t_{SLEW10}	'10' Fast Slew Rate (Averaging on)	0.9	1.6	2.5	V/ns	1,3,8
	t_{SLEW11}	'11' Fastest Slew Rate (Averaging on)	1.1	1.9	3.1	V/ns	1,3,8
Duty Cycle	d_{t1}	V_T = OVDD/2 V	40	51.4	60	%	1,6
Jitter, Peak period jitter	t_{jpeak}	V_T = OVDD/2 V, SSC < 0.75%		±116	±150	ps	1
Phase Noise	$t_{phasenoise}$	-56dBc		10	500	kHz	1,7
AC Input Swing Limits @ 3.3V OV_{DD}	ΔV_{AC}	This is the difference between VOL and VOH at the selected operating frequency.	1.9			V	1
Spread Spectrum Modulation Frequency	f_{SSMOD}	Triangular Modulation	0	31.5	60	kHz	

Electrical Characteristics - 125M

PARAMETER	SYMBOL	CONDITIONS	MIN	TYP	MAX	UNITS	NOTES
Clock frequency	f_{125M}	V_T = OVDD/2 V		125.00		ns	2,3,6
Synthesis error	ppm			0		ppm	1,2,5
Output High Voltage	V_{OH}	V_{OH} at the selected operating frequency	2.2			V	1
Output Low Voltage	V_{OL}	V_{OL} at the selected operating frequency			0.5	V	1
Rise/Fall time VDDO = 3.3V	$t_{RF125M3.3V}$	Measured between 0.6V and 2.7V		0.7	1	ns	1,3
Duty Cycle	d_{t1}	V_T = OVDD/2 V	47	52	53	%	1
Jitter, Peak period jitter	t_{jpeak}	V_T = OVDD/2 V			±150	ps	1

Electrical Characteristics - REF(5:0)

PARAMETER	SYMBOL	CONDITIONS	MIN	TYP	MAX	UNITS	NOTES
Clock Frequency	f	V_T = OVDD/2 V		25.00		MHz	2,3
Crystal Frequency Error	ppm	Including all aging and tuning effects	-50		50	ppm	1,2
Output High Voltage	V_{OH}	V_{OH} at the selected operating frequency	2.2			V	1
Output Low Voltage	V_{OL}	V_{OL} at the selected operating frequency			0.4	V	1
Slew Rate	t_{SLEW}	'00' = Hi-Z	1.0	1.7	2.7	V/ns	1,3,4
Duty Cycle	d_{t1}	V_T = OVDD/2 V	40	51	60	%	1
Pin to Pin Skew	t_{skew}	V_T = 1.5 V, odd/even outputs have an intentional 180degree phase shift.		N/A		ps	1
Jitter, Peak period jitter	t_{jpeak}	V_T = OVDD/2 V		±78	±200	ps	1
Jitter, Phase	t_{jphase}	(12kHz-5MHz), V_T = 1.5 V		1.7	3	ps rms	1

Electrical Characteristics - USB_CLK(2:1)

PARAMETER	SYMBOL	CONDITIONS	MIN	TYP	MAX	UNITS	NOTES
Clock Frequency	f_{USB_CLK}	V_T = OVDD/2 V		12.00		MHz	2,3
				24.00		MHz	2,3
Synthesis error	ppm			0		ppm	1,2,5
Output High Voltage	V_{OH}	V_{OH} at the selected operating frequency	2.2			V	1
Output Low Voltage	V_{OL}	V_{OL} at the selected operating frequency			0.4	V	1
Slew Rate VDDO = 3.3V	t_{SLEW00}	'00' = Hi-Z		Hi-Z		V/ns	
	t_{SLEW01}	'01' Slow Slew Rate (Averaging on)	1.0	1.4	1.8	V/ns	1,3,4
	t_{SLEW10}	'10' Fast Slew Rate (Averaging on)	1.5	2.0	2.7	V/ns	1,3,4
	t_{SLEW11}	'11' Fastest Slew Rate (Averaging on)	1.8	2.3	3.1	V/ns	1,3,4
Duty Cycle	d_{t1}	V_T = OVDD/2 V	45	50.3	55	%	1
Jitter, RMS	t_{jRMS}	12kHz to Nyquist		23	120	ps	1
Jitter, Cycle to cycle	$t_{jcyc-cyc}$	V_T = OVDD/2 V		142	350	ps	1

Electrical Characteristics - 2.048M(1:0)

PARAMETER	SYMBOL	CONDITIONS	MIN	TYP	MAX	UNITS	NOTES
Clock Frequency	f_{USB_CLK}	V_T = OVDD/2 V		2.048		MHz	2,3,6
Synthesis error	ppm			0		ppm	1,2,5
Output High Voltage	V_{OH}	V_{OH} at the selected operating frequency	2.2			V	1
Output Low Voltage	V_{OL}	V_{OL} at the selected operating frequency			0.4	V	1
Slew Rate VDDO = 3.3V	t_{SLEW00}	'00' = Hi-Z		Hi-Z		V/ns	
	t_{SLEW01}	'01' Slow Slew Rate (Averaging on)	1.1	1.7	2.5	V/ns	1,3,4
	t_{SLEW10}	'10' Fast Slew Rate (Averaging on)	1.6	2.3	3.2	V/ns	1,3,4
	t_{SLEW11}	'11' Fastest Slew Rate (Averaging on)	1.8	2.6	3.6	V/ns	1,3,4
Duty Cycle	d_{t1}	V_T = OVDD/2 V	45	46.7	55	%	1
Pin to Pin Skew	t_{skew}	V_T = OVDD/2 V		108	250	ps	1
Jitter, RMS	t_{jRMS}	12kHz to Nyquist		47	70	ps	1
Jitter, Peak period jitter	t_{jpeak}	V_T = OVDD/2 V		±170	±250	ps	1

Notes for single-ended clocks:

[1] Guaranteed by design and characterization, not 100% tested in production.

[2] Clock Frequency specifications are guaranteed assuming that REF is at 25MHz

[3] At default SMBus settings

[4] Measured betweeen 20% and 80% of OVDD

[5] This is the frequency error with respect to the crystal frequency.

[6] Measured at the rising and/or falling edge at OVDD/2 V.

[7] Phase noise is calculated as the FFT of the TIE jitter.

[8] Slew rate is measured from $\pm 0.3\Delta V_{AC}$ at the center of peak to peak voltage at the clock input.

General SMBus Serial Interface Information for IDT6V49205A

How to Write

- Controller (host) sends a start bit
- Controller (host) sends the write address
- IDT clock will ***acknowledge***
- Controller (host) sends the beginning byte location = N
- IDT clock will ***acknowledge***
- Controller (host) sends the byte count = X
- IDT clock will ***acknowledge***
- Controller (host) starts sending ***Byte N through Byte N+X-1***
- IDT clock will ***acknowledge*** each byte ***one at a time***
- Controller (host) sends a Stop bit

Index Block Write Operation			
Controller (Host)			**IDT (Slave/Receiver)**
T	starT bit		
Slave Address $D2_{(H)}$			
WR	WRite		
			ACK
Beginning Byte = N			
			ACK
Data Byte Count = X			
			ACK
Beginning Byte N		X Byte	
			ACK
O			
O			O
O			O
			O
Byte N + X - 1			
			ACK
P	stoP bit		

Note: I2C compatible. Native mode is SMBus Block mode protocol. To use I2C Byte mode set the 2^7 bit in the command Byte. No Byte count is used.

How to Read

- Controller (host) will send a start bit
- Controller (host) sends the write address
- IDT clock will ***acknowledge***
- Controller (host) sends the beginning byte location = N
- IDT clock will ***acknowledge***
- Controller (host) will send a separate start bit
- Controller (host) sends the read address
- IDT clock will ***acknowledge***
- IDT clock will send the data byte count = X
- IDT clock sends ***Byte N+X-1***
- IDT clock sends ***Byte 0 through Byte X (if $X_{(H)}$ was written to Byte 8)***
- Controller (host) will need to acknowledge each byte
- Controller (host) will send a not acknowledge bit
- Controller (host) will send a stop bit

Index Block Read Operation			
Controller (Host)			**IDT (Slave/Receiver)**
T	starT bit		
Slave Address $D2_{(H)}$			
WR	WRite		
			ACK
Beginning Byte = N			
			ACK
RT	Repeat starT		
Slave Address $D3_{(H)}$			
RD	ReaD		
			ACK
			Data Byte Count=X
ACK			
		X Byte	Beginning Byte N
ACK			
			O
O			O
O			O
O			
			Byte N + X - 1
N	Not acknowledge		
P	stoP bit		

Byte 0 Frequency and Spread Select Register

Bit	Name	Description	Type	0	1	Default
7	SS4	Sys_CCB and DDRCLK Spread Selection Table	RW	See Table 2: Sys_CCB and DDRCLK Spread Table		0
6	SS3		RW			0
5	SS2		RW			0
4	SS1	PCIE Spread Selection Table	RW	See Table 1: PCIE Spread Table		0
3	SS0		RW			0
2	REF_5_EN	Output enable for REF_5	RW	Output Disabled	Output Enabled	1
1	REF_4_EN	Output enable for REF_4	RW	Output Disabled	Output Enabled	1
0	REF_3_EN	Output enable for REF_5	RW	Output Disabled	Output Enabled	1

Byte 1 Output Enable Register

Bit	Name	Description	Type	0	1	Default
7	REF_2_EN	Output enable for REF_2	RW	Output Disabled	Output Enabled	1
6	REF_1_EN	Output enable for REF_1	RW	Output Disabled	Output Enabled	1
5	REF_0_EN	Output enable for REF_0	RW	Output Disabled	Output Enabled	1
4	USB_CLK1_EN	Output enable for USB_CLK1	RW	Output Disabled	Output Enabled	1
3	USB_CLK2_EN	Output enable for USB_CLK2	RW	Output Disabled	Output Enabled	1
2	CK2.048_0_EN	Output enable for CK2.048_0	RW	Output Disabled	Output Enabled	1
1	CK2.048_1_EN	Output enable for CK2.048_1	RW	Output Disabled	Output Enabled	1
0	DDRCLK_EN	Output enable for DDRCLK	RW	Output Disabled	Output Enabled	1

Byte 2 Output Enable Register

Bit	Name	Description	Type	0	1	Default
7	Sys_CCB_EN	Output enable for Sys_CCB	RW	Output Disabled	Output Enabled	1
6	PCIe5_EN	Output enable for PCIe5	RW	Output Disabled	Output Enabled	1
5	PCIe4_EN	Output enable for PCIe4	RW	Output Disabled	Output Enabled	1
4	PCIe3_EN	Output enable for PCIe3	RW	Output Disabled	Output Enabled	1
3	PCIe2_EN	Output enable for PCIe2	RW	Output Disabled	Output Enabled	1
2	PCIe1_EN	Output enable for PCIe1	RW	Output Disabled	Output Enabled	1
1	PCIe0_EN	Output enable for PCIe0	RW	Output Disabled	Output Enabled	1
0	125M_EN	Output enable for 125M	RW	Output Disabled	Output Enabled	1

Byte 3 Slew Rate Control Register

Bit	Name	Description	Type	0	1	Default
7	USB1_SLEW1	USB_CLK1 Slew Rate Control	RW	See USB Electrical Tables		0
6	USB1_SLEW0		RW			1
5	USB2_SLEW1	USB_CLK2 Slew Rate Control	RW	See USB Electrical Tables		0
4	USB2_SLEW0		RW			1
3	CK2.048_SLEW1	CK2.048_0 and CK2.048_1 Slew Rate Control	RW	See CK2.048 Electrical Tables		1
2	CK2.048_SLEW0		RW			1
1	Sys_CCB_SLEW1	Sys_CCB Slew Rate Control	RW	See Sys_CCB Electrical Tables		0
0	Sys_CCB_SLEW0		RW			1

Byte 4 Slew Rate Control Register

Bit	Name	Description	Type	0	1	Default
7	66M_Slew1	66MCLK Slew Rate Control	RW	See 66M Electrical Tables		0
6	66M_Slew0		RW			1
5	Reserved					0
4	Reserved					1
3	FS1	Sys_CCB Frequency Select Latch	RW	See Table 3: Sys_CCB Frequency Selection		Latch
2	FS0		RW			Latch
1	USB1_fSel	USB_CLK1 Clock Frequency Select	RW	12MHz	24MHz	0
0	USB2_fSel	USB_CLK2 Clock Frequency Select	RW	12MHz	24MHz	1

Byte 5 is Reserved

Byte 6 PCI Express Amplitude Control Register

Bit	Name	Description	Type	0	1	Default
7	PCIE_AMP1	PCI Express Amplitude Control	RW	See Table 4 PCIe Amplitude Selection Table		0
6	PCIE_AMP0		RW			1
5	Reserved	Reserved	R	-	-	1
4	SELPCIE125#_100	PCI Express latch select	R	125MHz	100MHz	latch
3	Reserved	Reserved	RW	-	-	0
2	Reserved	Reserved	RW	-	-	1
1	Reserved	Reserved	RW	-	-	0
0	Reserved	Reserved	RW	-	-	1

Byte 7 Revision and Vendor ID Register

Bit	Name	Description	Type	0	1	Default
7	REV ID	Revision ID	R	-	-	0
6	REV ID		R	-	-	0
5	REV ID		R	-	-	0
4	REV ID		R	-	-	0
3	Vendor ID	Vendor ID	R	-	-	0
2	Vendor ID		R	-	-	0
1	Vendor ID		R	-	-	0
0	Vendor ID		R	-	-	1

Byte 8 Byte Count Register

Bit	Name	Description	Type	0	1	Default
7	BC7	Byte Count Programming b(7:0)	RW	Writing to this register will configure how many bytes will be read back.		0
6	BC6		RW			0
5	BC5		RW			0
4	BC4		RW			0
3	BC3		RW			0
2	BC2		RW			1
1	BC1		RW			0
0	BC0		RW			1

Recommended Crystal Characteristics

PARAMETER	VALUE	UNITS	NOTES
Frequency	25	MHz	1
Resonance Mode	Fundamental	-	1
Frequency Tolerance @ 25°C	±20	PPM Max	1
Frequency Stability, ref @ 25°C Over Operating Temperature Range	±20	PPM Max	1
Temperature Range (commerical)	0~70	°C	1
Temperature Range (industrial)	-40~85	°C	1
Equivalent Series Resistance (ESR)	50	Ω Max	1
Shunt Capacitance (C_O)	7	pF Max	1
Load Capacitance (C_L)	8	pF Max	1
Drive Level	0.3	mW Max	1
Aging per year	±5	PPM Max	1

Test Loads

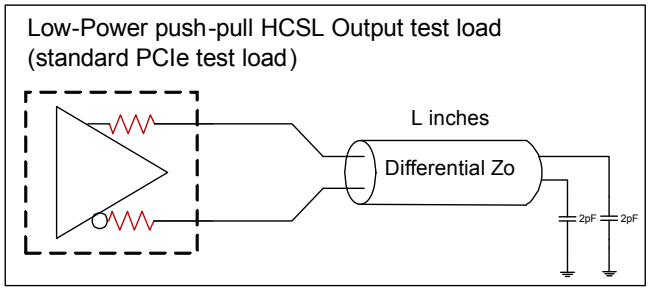

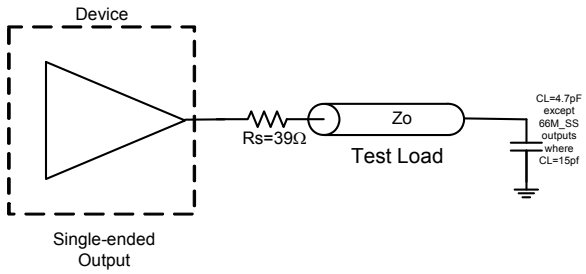

Differential Test Load, Zo = 100ohm, L = 5 inches

Thermal Characteristics (48-TSSOP) PAG48

PARAMETER	SYMBOL	CONDITIONS	PKG	TYP VALUE	UNITS	NOTES
Thermal Resistance	θ_{JC}	Junction to Case	PAG48	28	°C/W	1
	θ_{Jb}	Junction to Base		42	°C/W	1
	θ_{JA0}	Junction to Air, still air		62	°C/W	1
	θ_{JA1}	Junction to Air, 1 m/s air flow		54	°C/W	1
	θ_{JA3}	Junction to Air, 3 m/s air flow		51	°C/W	1

Marking Diagrams





Notes:
1. '$' is the mark code.
2. YYWW is the last two digits of the year, and the week number that the part was assembled.
3. "G" after the two-letter package code denotes Pb free package.
4. "I" denotes industrial temperature range.
5. Bottom marking: country of origin if not USA.

Package Outline and Package Dimensions (PAG48, 48-pin TSSOP, 6.10 mm Body, 0.50 Pitch)

Package dimensions are kept current with JEDEC Publication No. 95

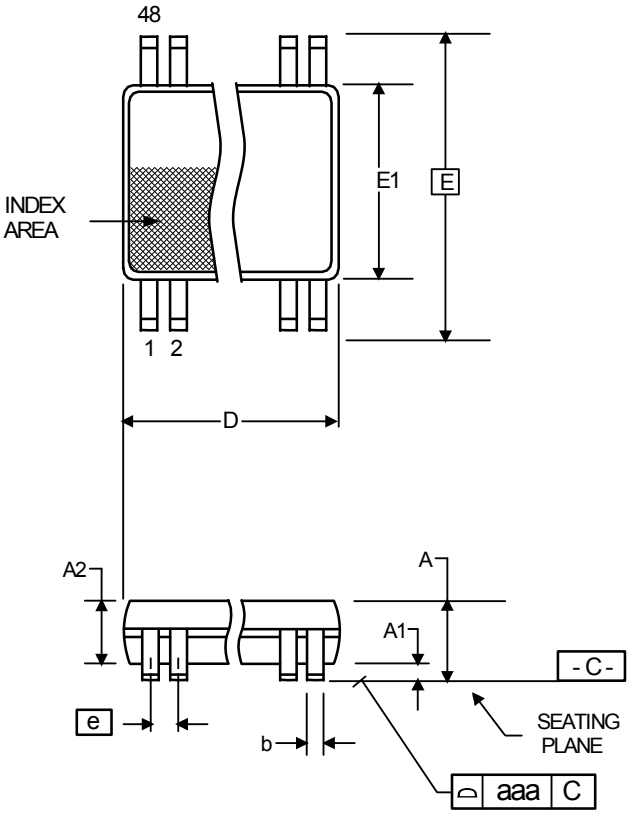

	Millimeters		Inches*	
Symbol	Min	Max	Min	Max
A	--	1.20	--	0.047
A1	0.05	0.15	0.002	0.006
A2	0.80	1.05	0.032	0.041
b	0.17	0.27	0.007	0.011
c	0.09	0.20	0.0035	0.008
D	12.40	12.60	0.488	0.496
E	8.10 BASIC		0.319 BASIC	
E1	6.00	6.20	0.236	0.244
e	0.50 Basic		0.020 Basic	
L	0.45	0.75	0.018	0.030
α	0°	8°	0°	8°
aaa	--	0.10	--	0.004

*For reference only. Controlling dimensions in mm.

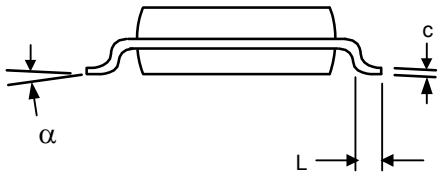

Ordering Information

Part / Order Number	Marking	Shipping Packaging	Package	Temperature
6V49205APAGI	see page 12	Tubes	48-pin TSSOP	-40 to +85°C
6V49205APAGI8		Tape and Reel	48-pin TSSOP	-40 to +85°C
6V49205APAG	see page 12	Tubes	48-pin TSSOP	0 to +70°C
6V49205APAG8		Tape and Reel	48-pin TSSOP	0 to +70°C

"G" after the two-letter package code denotes Pb-Free configuration, RoHS compliant.

For an NLG I-temp device, see the 6V49205B.

While the information presented herein has been checked for both accuracy and reliability, Integrated Device Technology (IDT) assumes no responsibility for either its use or for the infringement of any patents or other rights of third parties, which would result from its use. No other circuits, patents, or licenses are implied. This product is intended for use in normal commercial applications. Any other applications such as those requiring extended temperature range, high reliability, or other extraordinary environmental requirements are not recommended without additional processing by IDT. IDT does not authorize or warrant any IDT product for use in life support devices or critical medical instruments.

Revision History

Rev.	Issue Date	Issuer	Description	Page #
L	12/12/2013	R. Wade	1. Extensive overhaul of Electrical tables to more closely align with Freescale published specifications. 2. Updated electrical tables with characterization data. 3. Clarified SMBus registers for Slew Rate Controls 4. Moved electrical tables in front of SMBus for consistency with other data sheets. 5. Updated Thermal Data and added test loads for clarity. 6. Updated front page text 7. Minor updates to pin names (mainly power and ground) for consistency and clarity	Various
L	1/9/2014	J. Tajnai	Table 2: Sys_CCB and DDR Spread Table; 100~111 marked as Reserved.	4
M	2/12/2014	D. Christenberry	Added 48-pin VFQFPN package, diagrams, and references	Various
N	3/24/2015	RDW	Updated ordering information to remove I-temp NLG package, and to add commercial PAG and NLG packages	14
P	5/11/2016	RDW	1. Correct PCIeT_LRn and PCIeC_LRn to be PCIeT_Ln and PCIeC_Ln to indicate that the Rs for the PCIe outputs is outside the part and to correct the pin description accordingly. The test loads for the device are correct. 2. Update block diagram PCIe pin names to be consistent.	1-3
Q	11/22/2016	RDW	1. Undo Revision P 2. PCIe outputs have integrated terminations for 100ohm differential Zo. 3. Update Test Loads 4. Update Features/Benefits	1-3, 12

Innovate with IDT and accelerate your future networks. Contact:

www.IDT.com

For Sales
www.idt.com/go/sales

For Tech Support
www.idt.com/go/support

Corporate Headquarters
Integrated Device Technology, Inc.
www.idt.com

© 2016 Integrated Device Technology, Inc. All rights reserved. Product specifications subject to change without notice. IDT, ICS, and the IDT logo are trademarks of Integrated Device Technology, Inc. Accelerated Thinking is a service mark of Integrated Device Technology, Inc. All other brands, product names and marks are or may be trademarks or registered trademarks used to identify products or services of their respective owners.
Printed in USA