DDR 13-Bit to 26-Bit Registered Buffer

Recommended Applications:

- DDR Memory Modules:
  - DDRI (PC1600, PC2100)
  - DDR333 (PC2700)
  - DDRI-400 (PC3200)
- Provides complete DDR DIMM logic solution with ICS93V857 or ICS95V857
- SSTL_2 compatible data registers

Product Features:

- Differential clock signals
- Meets SSTL_2 signal data
- Supports SSTL_2 class I specifications on outputs
- Low-voltage operation
  - V_{DD} = 2.3V to 2.7V
- Available in 64 pin TSSOP and 56 pin MLF packages

Truth Table[1]

Inputs				Q Outputs
RESET#	CLK	CLK#	D	Q
L	X or Floating	X or Floating	X or Floating	L
H	↑	↓	H	H
H	↑	↓	L	L
H	L or H	L or H	X	Q_0[2]

Notes:

1. H = "High" Signal Level
   L = "Low" Signal Level
   ↑ = Transition "Low"-to-"High"
   ↓ = Transition "High"-to-"Low"
   X = Don't Care
2. Output level before the indicated steady state input conditions were established.

Block Diagram

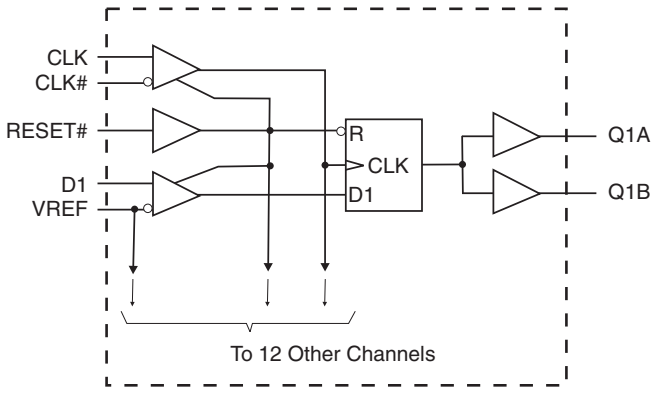

Pin Configuration

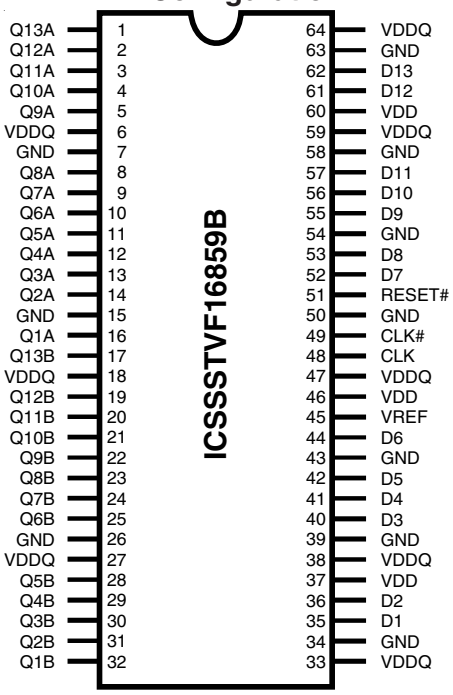

64-Pin TSSOP

6.10 mm. Body, 0.50 mm. pitch

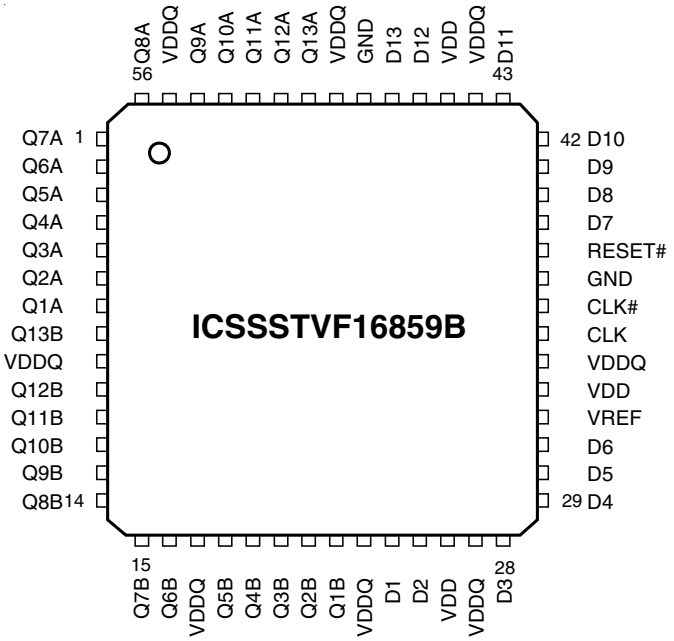

56-pin FVQFN (MLF2)

General Description

The 13-bit-to-26-bit **ICSSSTVF16859B** is a universal bus driver designed for 2.3V to 2.7V V_{DD} operation and SSTL_2 I/O levels, except for the LVCMOS RESET# input.

Data flow from D to Q is controlled by the differential clock (CLK/CLK#) and a control signal (RESET#). The positive edge of CLK is used to trigger the data flow and CLK# is used to maintain sufficient noise margins where as RESET#, an LVCMOS asynchronous signal, is intended for use at the time of power-up only. **ICSSSTVF16859B** supports low-power standby operation. A logic level “Low” at RESET# assures that all internal registers and outputs (Q) are reset to the logic “Low” state, and all input receivers, data (D) and clock (CLK/CLK#) are switched off. Please note that RESET# must always be supported with LVCMOS levels at a valid logic state because VREF may not be stable during power-up.

To ensure that outputs are at a defined logic state before a stable clock has been supplied, RESET# must be held at a logic “Low” level during power up.

In the DDR DIMM application, RESET# is specified to be completely asynchronous with respect to CLK and CLK#. Therefore, no timing relationship can be guaranteed between the two signals. When entering a low-power standby state, the register will be cleared and the outputs will be driven to a logic “Low” level quickly relative to the time to disable the differential input receivers. This ensures there are no glitches on the output. However, when coming out of low-power standby state, the register will become active quickly relative to the time to enable the differential input receivers. When the data inputs are at a logic level “Low” and the clock is stable during the “Low”-to-”High” transition of RESET# until the input receivers are fully enabled, the design ensures that the outputs will remain at a logic “Low” level.

Pin Configuration (64-Pin TSSOP)

PIN NUMBER	PIN NAME	TYPE	DESCRIPTION
1-5, 8-14, 16, 17, 19-25, 28-32	Q (13:1)	OUTPUT	Data output
7, 15, 26, 34, 39, 43, 50, 54, 58, 63	GND	PWR	Ground
6, 18, 27, 33, 38, 47, 59, 64	VDDQ	PWR	Output supply voltage, 2.5V nominal
35, 36, 40-42, 44, 52, 53, 55-57, 61, 62	D (13:1)	INPUT	Data input
48	CLK	INPUT	Positive master clock input
49	CLK#	INPUT	Negative master clock input
37, 46, 60	VDD	PWR	Core supply voltage, 2.5V nominal
51	RESET#	INPUT	Reset (active low)
45	VREF	INPUT	Input reference voltage, 2.5V nominal

Pin Configuration (56-Pin MLF2)

PIN NUMBER	PIN NAME	TYPE	DESCRIPTION
1-8, 10-16, 18-22, 50-54, 56	Q (13:1)	OUTPUT	Data output
37, 48	GND	PWR	Ground
9, 17, 23, 27, 34, 44, 49, 55	VDDQ	PWR	Output supply voltage, 2.5V nominal
24, 25, 28-31, 39-43, 46, 47	D (13:1)	INPUT	Data input
35	CLK	INPUT	Positive master clock input
36	CLK#	INPUT	Negative master clock input
26, 33, 45	VDD	PWR	Core supply voltage, 2.5V nominal
38	RESET#	INPUT	Reset (active low)
32	VREF	INPUT	Input reference voltage, 2.5V nominal
-	Center PAD	PWR	Ground (MLF2 package only)

1019B—03/15/05

Absolute Maximum Ratings

Storage Temperature	–65°C to +150°C
Supply Voltage	-0.5 to 3.6V
Input Voltage[1]	-0.5 to V_{DD} +0.5
Output Voltage[1,2]	-0.5 to V_{DDQ} +0.5
Input Clamp Current	±50 mA
Output Clamp Current	±50 mA
Continuous Output Current	±50 mA
V_{DD}, V_{DDQ} or GND Current/Pin	±100 mA
Package Thermal Impedance[3]	55°C/W

Notes:
1. The input and output negative voltage ratings may be excluded if the input and output clamp ratings are observed.
2. This current will flow only when the output is in the high state level $V_0 > V_{DDQ}$.
3. The package thermal impedance is calculated in accordance with JESD 51.

Stresses above those listed under *Absolute Maximum Ratings* may cause permanent damage to the device. These ratings are stress specifications only and functional operation of the device at these or any other conditions above those listed in the operational sections of the specifications is not implied. Exposure to absolute maximum rating conditions for extended periods may affect product reliability.

Recommended Operating Conditions - DDRI/DDR333 (PC1600, PC2100, PC2700)

PARAMETER	DESCRIPTION		MIN	TYP	MAX	UNITS
V_{DD}	Supply Voltage		2.3	2.5	2.7	V
V_{DDQ}	I/O Supply Voltage		2.3	2.5	2.7	
V_{REF}	Reference Voltage		1.15	1.25	1.35	
V_{TT}	Termination Voltage		V_{REF} - 0.04	V_{REF}	V_{REF} + 0.04	
V_I	Input Voltage		0		V_{DDQ}	
$V_{IH\ (DC)}$	DC Input High Voltage	Data Inputs	V_{REF} + 0.15			
$V_{IH\ (AC)}$	AC Input High Voltage		V_{REF} + 0.31			
$V_{IL\ (DC)}$	DC Input Low Voltage				V_{REF} - 0.15	
$V_{IL\ (DC)}$	AC Input Low Voltage				V_{REF} - 0.31	
V_{IH}	Input High Voltage Level	RESET#	1.7			
V_{IL}	Input Low Voltage Level				0.7	
V_{ICR}	Common mode Input Range	CLK, CLK#	0.97		1.53	
V_{ID}	Differential Input Voltage		0.36			
V_{IX}	Cross Point Voltage of Differential Clock Pair		(V_{DDQ}/2) - 0.2		(V_{DDQ}/2) + 0.2	
I_{OH}	High-Level Output Current				-16	mA
I_{OL}	Low-Level Output Current				16	
T_A	Operating Free-Air Temperature		0		70	°C

[1]Guaranteed by design, not 100% tested in production.

Recommended Operating Conditions - DDRI-400 (PC3200)

PARAMETER	DESCRIPTION		MIN	TYP	MAX	UNITS
V_{DD}	Supply Voltage		2.5	2.6	2.7	V
V_{DDQ}	I/O Supply Voltage		2.5	2.6	2.7	
V_{REF}	Reference Voltage		1.25	1.3	1.35	
V_{TT}	Termination Voltage		V_{REF} - 0.04	V_{REF}	V_{REF} + 0.04	
V_I	Input Voltage		0		V_{DDQ}	
$V_{IH\ (DC)}$	DC Input High Voltage	Data Inputs	V_{REF} + 0.15			
$V_{IH\ (AC)}$	AC Input High Voltage		V_{REF} + 0.31			
$V_{IL\ (DC)}$	DC Input Low Voltage				V_{REF} - 0.15	
$V_{IL\ (DC)}$	AC Input Low Voltage				V_{REF} - 0.31	
V_{IH}	Input High Voltage Level	RESET#	1.7			
V_{IL}	Input Low Voltage Level				0.7	
V_{ICR}	Common mode Input Range	CLK, CLK#	0.97		1.53	
V_{ID}	Differential Input Voltage		0.36			
V_{IX}	Cross Point Voltage of Differential Clock Pair		(V_{DDQ}/2) - 0.2		(V_{DDQ}/2) + 0.2	
I_{OH}	High-Level Output Current				-16	mA
I_{OL}	Low-Level Output Current				16	
T_A	Operating Free-Air Temperature		0		70	°C

[1]Guaranteed by design, not 100% tested in production.

DC Electrical Characteristics - DDRI/DDR333 (PC1600, PC2100, PC2700)

T_A = 0 - 70°C; V_{DD} = 2.5 +/-0.2V, V_{DDQ}=2.5 +/-0.2V; (unless otherwise stated)

SYMBOL	PARAMETERS	CONDITIONS		V_{DDQ}	MIN	TYP	MAX	UNITS
V_{IK}		I_I = -18mA		2.3V			-1.2	V
V_{OH}		I_{OH} = -100µA		2.3V-2.7V	V_{DDQ} - 0.2			
		I_{OH} = -8mA		2.3V	1.95			
V_{OL}		I_{OL} = 100µA		2.3V-2.7V			0.2	
		I_{OL} = 8mA		2.3V			0.35	
I_I	All Inputs	$V_I = V_{DD}$ or GND		2.7V			±5	µA
I_{DD}	Standby (Static)	RESET# = GND	I_O = 0	2.7V			0.01	µA
	Operating (Static)	$V_I = V_{IH(AC)}$ or $V_{IL(AC)}$, RESET# = V_{DD}				TBD		mA
I_{DDD}	Dynamic operating (clock only)	RESET# = V_{DD}, $V_I = V_{IH(AC)}$ or $V_{IL(AC)}$, CLK and CLK# switching 50% duty cycle.				TBD		µ/clock MHz
	Dynamic Operating (per each data input)	RESET# = V_{DD}, $V_I = V_{IH(AC)}$ or $V_{IL\ (AC)}$, CLK and CLK# switching 50% duty cycle. One data input switching at half clock frequency, 50% duty cycle				TBD		µA/ clock MHz/data
r_{OH}	Output High	I_{OH} = -16mA		2.3V-2.7V	7	13.5	20	Ω
r_{OL}	Output Low	I_{OL} = 16mA		2.3V-2.7V	7	13	20	Ω
$r_{O(D)}$	[r_{OH} - r_{OL}] each separate bit	I_O = 20mA, T_A = 25° C		2.5V			4	Ω
C_i	Data Inputs	$V_I = V_{REF}$ ±350mV		2.5V	2.5		3.5	pF
	CLK and CLK#	V_{ICR} = 1.25V, $V_{I(PP)}$ = 360mV			2.5		3.5	

Notes:

1 - Guaranteed by design, not 100% tested in production.

DC Electrical Characteristics - DDRI-400 (PC3200)

T_A = 0 - 70°C; V_{DD} = 2.5 +/-0.2V, V_{DDQ}=2.5 +/-0.2V; (unless otherwise stated)

SYMBOL	PARAMETERS	CONDITIONS		V_{DDQ}	MIN	TYP	MAX	UNITS
V_{IK}		I_I = -18mA		2.5V			-1.2	V
V_{OH}		I_{OH} = -100µA		2.5V-2.7V	V_{DDQ} - 0.2			
		I_{OH} = -8mA		2.7V	1.95			
V_{OL}		I_{OL} = 100µA		2.5V-2.7V			0.2	
		I_{OL} = 8mA		2.5V			0.35	
I_I	All Inputs	$V_I = V_{DD}$ or GND		2.7V			±5	µA
I_{DD}	Standby (Static)	RESET# = GND	I_O = 0	2.7V			0.01	µA
	Operating (Static)	$V_I = V_{IH(AC)}$ or $V_{IL(AC)}$, RESET# = V_{DD}				TBD		mA
I_{DDD}	Dynamic operating (clock only)	RESET# = V_{DD}, $V_I = V_{IH(AC)}$ or $V_{IL(AC)}$, CLK and CLK# switching 50% duty cycle.				TBD		µ/clock MHz
	Dynamic Operating (per each data input)	RESET# = V_{DD}, $V_I = V_{IH(AC)}$ or $V_{IL\ (AC)}$, CLK and CLK# switching 50% duty cycle. One data input switching at half clock frequency, 50% duty cycle				TBD		µA/ clock MHz/data
r_{OH}	Output High	I_{OH} = -16mA		2.5V-2.7V	7	13.5	20	Ω
r_{OL}	Output Low	I_{OL} = 16mA		2.5V-2.7V	7	13	20	Ω
$r_{O(D)}$	[r_{OH} - r_{OL}] each separate bit	I_O = 20mA, T_A = 25° C		2.6V			4	Ω
C_i	Data Inputs	$V_I = V_{REF}$ ±350mV		2.6V	2.5		3.5	pF
	CLK and CLK#	V_{ICR} = 1.25V, $V_{I(PP)}$ = 360mV			2.5		3.5	

Notes:

1 - Guaranteed by design, not 100% tested in production.

Timing Requirements[1]

(over recommended operating free-air temperature range, unless otherwise noted)

SYMBOL	PARAMETERS		V_{DDQ} = 2.5V ± 0.2V		UNITS
			MIN	MAX	
f_{clock}	Clock frequency			270	MHz
t_{SL}	Output slew rate		1	4	V/ns
t_S	Setup time, fast slew rate [2 & 4]	Data before CLK↑ , CLK#↓	0.4		ns
	Setup time, slow slew rate [3 & 4]		0.6		ns
T_h	Hold time, fast slew rate [2 & 4]	Data after CLK↑ , CLK#↓	0.4		ns
	Hold time, slow slew rate [3 & 4]		0.5		ns

Notes: 1 - Guaranteed by design, not 100% tested in production.
2 - For data signal input slew rate of ≥ 1V/ns.
3 - For data signal input slew rate of ≥ 0.5V/ns and < 1V/ns.
4 - CLK, CLK# signals input slew rate of ≥ 1V/ns.

Switching Characteristics - DDRI/DDR333 (PC1600, PC2100, PC2700)

(over recommended operating free-air temperature range, unless otherwise noted) (see Figure 1)

SYMBOL	From (Input)	To (Output)	V_{DD} = 2.5V ±0.2V			UNITS
			MIN	TYP	MAX	
f_{max}			210			MHz
t_{PD}	CLK, CLK# (TSSOP)	Q	1.6	2.1	2.6	ns
	CLK, CLK# (VFQFN[MLF2])	Q	1.6	2.1	2.6	ns
t_{phl}	RESET#	Q			3.5	ns

Switching Characteristics - DDRI-400 (PC3200)

(over recommended operating free-air temperature range, unless otherwise noted) (see Figure 1)

SYMBOL	From (Input)	To (Output)	V_{DD} = 2.6V ±0.1V			UNITS
			MIN	TYP	MAX	
f_{max}			210			MHz
t_{PD}	(VFQFN[MLF2])	Q	1.1		2.2	ns
t_{PDSS}		Q			2.48	ns
t_{phl}	RESET#	Q			3.5	ns

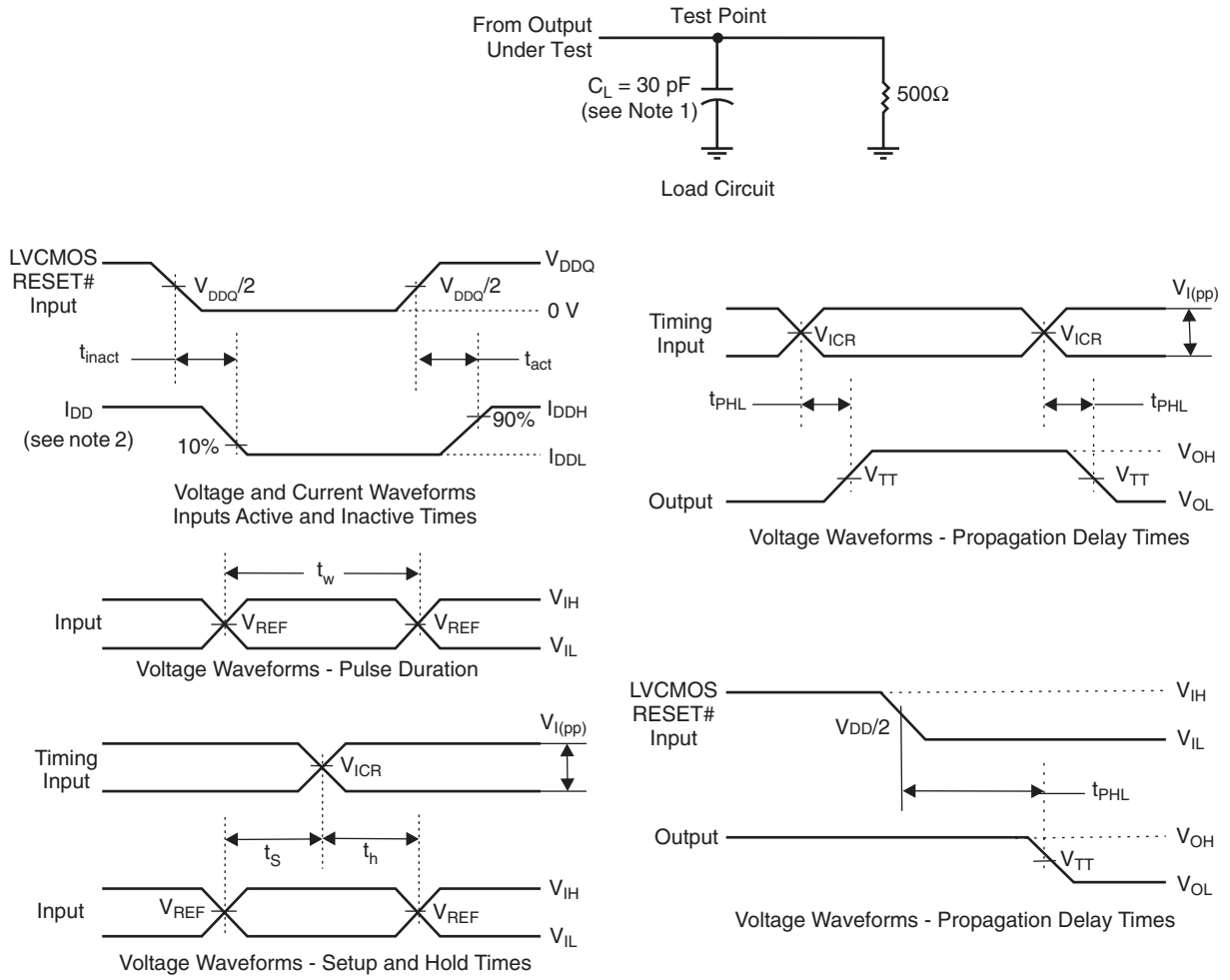

Figure 1 - Parameter Measurement Information (V_{DDQ} = 2.5V ±0.2V)

Notes:
1. CL incluces probe and jig capacitance.
2. I_{DD} tested with clock and data inputs held at V_{DDQ} or GND, and I_O = 0 mA.
3. All input pulses are supplied by generators having the following characteristics: PRR @10 MHz, Zo=50Ω, input slew rate = 1 V/ns ±20% (unless otherwise specified).
4. The outputs are measured one at a time with one transition per measurement.
5. $V_{TT} = V_{REF} = V_{DDQ}/2$
6. $V_{IH} = V_{REF}$ + 310mV (AC voltage levels) for differential inputs. $V_{IH} = V_{DDQ}$ for LVCMOS input.
7. $V_{IL} = V_{REF}$ - 310mV (AC voltage levels) for differential inputs. V_{IL} = GND for LVCMOS input.
8. t_{PLH} and t_{PHL} are the same as t_{pd}

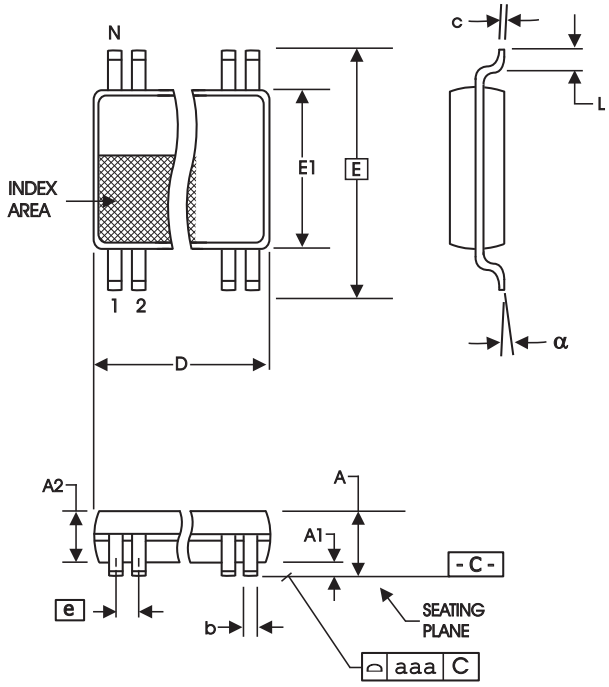

SYMBOL	In Millimeters COMMON DIMENSIONS		In Inches COMMON DIMENSIONS	
	MIN	MAX	MIN	MAX
A	--	1.20	--	.047
A1	0.05	0.15	.002	.006
A2	0.80	1.05	.032	.041
b	0.17	0.27	.007	.011
c	0.09	0.20	.0035	.008
D	SEE VARIATIONS		SEE VARIATIONS	
E	8.10 BASIC		0.319 BASIC	
E1	6.00	6.20	.236	.244
e	0.50 BASIC		0.020 BASIC	
L	0.45	0.75	.018	.030
N	SEE VARIATIONS		SEE VARIATIONS	
α	0°	8°	0°	8°
aaa	--	0.10	--	.004

VARIATIONS

N	D mm.		D (inch)	
	MIN	MAX	MIN	MAX
64	16.90	17.10	.665	.673

Reference Doc.: JEDEC Publication 95, MO-153

10-0039

6.10 mm. Body, 0.50 mm. pitch TSSOP
(240 mil) (0.020 mil)

Ordering Information

ICSSSTVF16859yGLF-T

Example:

ICS XXXX y G LF - PPP - T

- **Designation for tape and reel packaging**
- **Pattern Number (2 or 3 digit number for parts with ROM code patterns)**
- **Annealed Lead Free (Optional)**
- **Package Type**
  G = TSSOP
- **Revision Designator** (will not correlate with datasheet revision)
- **Device Type (consists of 3 or 4 digit numbers)**
- **Prefix**
  ICS, AV = Standard Device

1019B—03/15/05

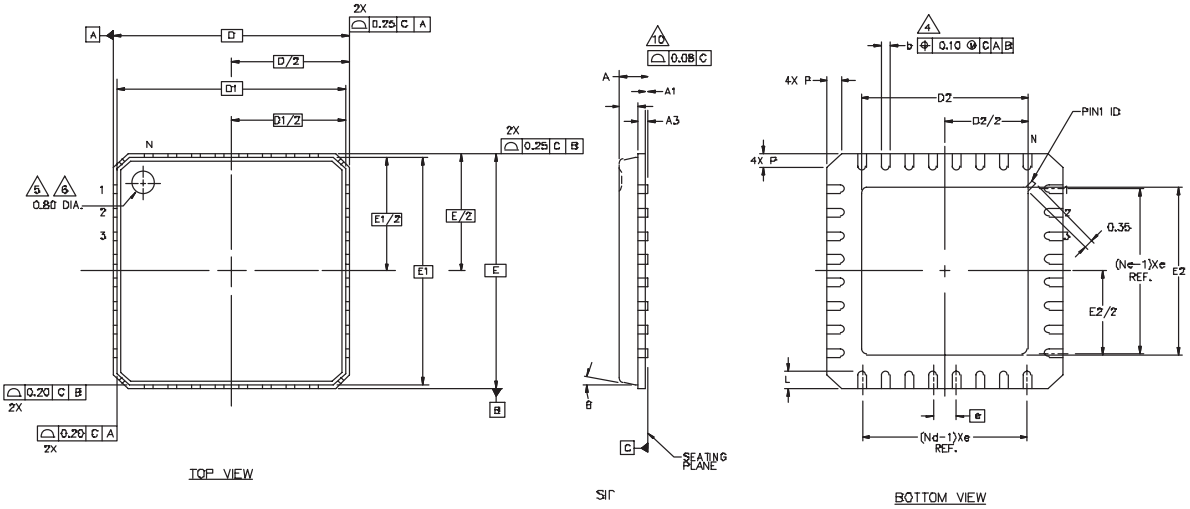

56 pin MLF2

Symbol	Common Dimensions		
A	-	0.85	1.00
A1	0.00	0.01	0.05
A2	-	0.65	0.80
A3	0.20 BSC		
D	8.00 BSC		
D1	7.75 BSC		
E	8.00 BSC		
E1	7.75 BSC		
Θ			12
P	0.24	0.42	0.60
R	0.13	0.17	0.23
Pitch Varation D			
e	0.50 BSC		
N	56		
Nd	14		
Ne	14		
L	0.30	0.40	0.50
b	0.18	0.23	0.30
Q	0.00	0.20	0.45
D2	4.35	4.50	4.65
E2	5.05	5.20	5.35

Ordering Information

ICSSSTVF16859yKLF-T

Example:

ICS XXXX y K LF - PPP - T

- **Designation for tape and reel packaging**
- **Pattern Number (2 or 3 digit number for parts with ROM code patterns)**
- **Annealed Lead Free (Optional)**
- **Package Type**
  K = MLF
- **Revision Designator** (will not correlate with datasheet revision)
- **Device Type (consists of 3 or 4 digit numbers)**
- **Prefix**
  ICS, AV = Standard Device

1019B—03/15/05