General Description

The ICS874003-02 is a high performance Differential-to- LVDS Jitter Attenuator designed for use in PCI Express systems. In some PCI Express systems, such as those found in desktop PCs, the PCI Express clocks are generated from a low bandwidth, high phase noise PLL frequency synthesizer. In these systems, a jitter attenuator may be required to attenuate high frequency random and deterministic jitter components from the PLL synthesizer and from the system board. The ICS874003-02 has a bandwidth of 400kHz which is designed to provide good jitter attenuation.

The ICS874003-02 uses IDT's 3RD Generation Femtoclock® PLL technology to achieve the lowest possible phase noise. The device is packaged in a 20 lead TSSOP package, making it ideal for use in space constrained applications such as PCI Express add-in cards.

Features

- Three differential LVDS output pairs
- One differential clock input
- CLK, nCLK supports the following input levels: LVPECL, LVDS, LVHSTL, HCSL, SSTL
- Input frequency range: 98MHz to 128MHz
- Output frequency range: 98MHz to 320MHz
- VCO range: 490MHz - 640MHz
- Cycle-to-cycle jitter: 35ps (maximum)
- For PCI Express Spread Spectrum Clocking support use the ICS874003-05
- Full 3.3V supply mode
- 0°C to 70°C ambient operating temperature
- Available in both standard (RoHS 5) and lead-free (RoHS 6) packages

F_SEL[2:0] Function Table

Inputs			Outputs	
F_SEL2	F_SEL1	F_SEL0	QA[0:1], nQA[0:1]	QB0, nQB0
0	0	0	÷2	÷2
1	0	0	÷5	÷2
0	1	0	÷4	÷2
1	1	0	÷2	÷4
0	0	1	÷2	÷5
1	0	1	÷5	÷4
0	1	1	÷4	÷5
1	1	1	÷4	÷4

Pin Assignment

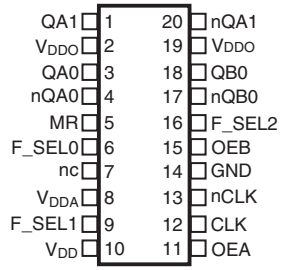

ICS874003-02
20-Lead TSSOP
6.5mm x 4.4mm x 0.925mm package body
G Package
Top View

 ©2010 Integrated Device Technology, Inc.

Block Diagram

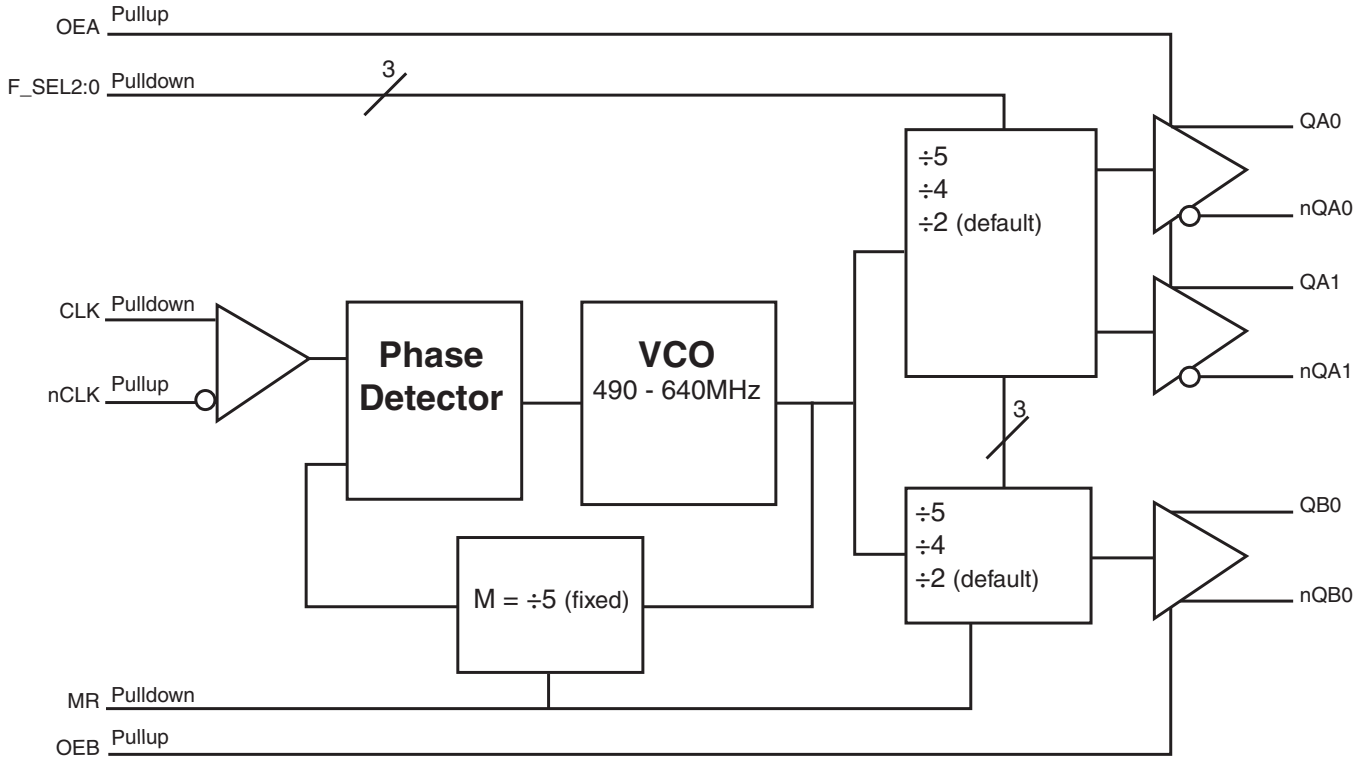

 ©2010 Integrated Device Technology, Inc.

Table 1. Pin Descriptions

Number	Name	Type		Description
1, 20	QA1, nQA1	Output		Differential output pair. LVDS interface levels.
2, 19	V_{DDO}	Power		Output supply pins.
3, 4	QA0, nQA0	Output		Differential output pair. LVDS interface levels.
5	MR	Input	Pulldown	Active HIGH Master Reset. When logic HIGH, the internal dividers are reset causing the true outputs (Qx) to go low and the inverted outputs (nQx) to go high. When logic LOW, the internal dividers and the outputs are enabled. LVCMOS/LVTTL interface levels.
6, 9, 16	F_SEL0, F_SEL1, F_SEL2	Input	Pulldown	Frequency select pin for QAx, nQAx and QB0, nQB0 outputs. LVCMOS/LVTTL interface levels.
7	nc	Unused		No connect.
8	V_{DDA}	Power		Analog supply pin.
10	V_{DD}	Power		Core supply pin.
11	OEA	Input	Pullup	Output enable pin for QA pins. When HIGH, the QAx, nQAx outputs are active. When LOW, the QAx, nQAx outputs are in a high impedance state. LVCMOS/LVTTL interface levels.
12	CLK	Input	Pulldown	Non-inverting differential clock input.
13	nCLK	Input	Pullup	Inverting differential clock input.
14	GND	Power		Power supply ground.
15	OEB	Input	Pullup	Output enable pin for QB0 pins. When HIGH, the QB0, nQB0 outputs are active. When LOW, the QB0, nQB0 outputs are in a high impedance state. LVCMOS/LVTTL interface levels.
17, 18	nQB0, QB0	Output		Differential output pair. LVDS interface levels.

NOTE: *Pullup and Pulldown* refer to internal input resistors. See Table 2, *Pin Characteristics,* for typical values.

Table 2. Pin Characteristics

Symbol	Parameter	Test Conditions	Minimum	Typical	Maximum	Units
C_{IN}	Input Capacitance			4		pF
R_{PULLUP}	Input Pullup Resistor			51		kΩ
$R_{PULLDOWN}$	Input Pulldown Resistor			51		kΩ

Function Table

Table 3. Output Enable Function Table

Inputs		Outputs	
OEA	**OEB**	**QA[0:1], nQA[0:1]**	**QB0, nQB0**
0	0	Hi-Impedance	Hi-Impedance
1	1	Enabled	Enabled

 ©2010 Integrated Device Technology, Inc.

Absolute Maximum Ratings

NOTE: Stresses beyond those listed under *Absolute Maximum Ratings* may cause permanent damage to the device. These ratings are stress specifications only. Functional operation of product at these conditions or any conditions beyond those listed in the *DC Characteristics or AC Characteristics* is not implied. Exposure to absolute maximum rating conditions for extended periods may affect product reliability.

Item	Rating
Supply Voltage, V_{DD}	4.6V
Inputs, V_I	-0.5V to V_{DD} + 0.5V
Outputs, I_O Continuos Current Surge Current	 10mA 15mA
Package Thermal Impedance, θ_{JA}	73.2°C/W (0 lfpm)
Storage Temperature, T_{STG}	-65°C to 150°C

DC Electrical Characteristics

Table 4A. LVDS Power Supply DC Characteristics, V_{DD} = V_{DDA} = V_{DDO} = 3.3V ± 5%, T_A = 0°C to 70°C

Symbol	Parameter	Test Conditions	Minimum	Typical	Maximum	Units
V_{DD}	Core Supply Voltage		3.135	3.3	3.465	V
V_{DDA}	Analog Supply Voltage		V_{DD} – 0.12	3.3	V_{DD}	V
V_{DDO}	Output Supply Voltage		3.135	3.3	3.465	V
I_{DD}	Power Supply Current				75	mA
I_{DDA}	Analog Supply Current				12	mA
I_{DDO}	Output Supply Current				75	mA

Table 4B. LVCMOS/LVTTL DC Characteristics, V_{DD} = V_{DDA} = V_{DDO} = 3.3V ± 5%, T_A = 0°C to 70°C

Symbol	Parameter		Test Conditions	Minimum	Typical	Maximum	Units
V_{IH}	Input High Voltage			2		V_{DD} + 0.3	V
V_{IL}	Input Low Voltage			-0.3		0.8	V
I_{IH}	Input High Current	OEA, OEB	V_{DD} = V_{IN} = 3.465V			5	µA
		F_SEL0, F_SEL1, F_SEL2, MR	V_{DD} = V_{IN} = 3.465V			150	µA
I_{IL}	Input Low Current	OEA, OEB	V_{DD} = 3.465V, V_{IN} = 0V	-150			µA
		F_SEL0, F_SEL1, F_SEL2, MR	V_{DD} = 3.465V, V_{IN} = 0V	-5			µA

 ©2010 Integrated Device Technology, Inc.

Table 4C. Differential DC Characteristics, $V_{DD} = V_{DDA} = V_{DDO} = 3.3V \pm 5\%$, $T_A = 0°C$ to 70°C

Symbol	Parameter		Test Conditions	Minimum	Typical	Maximum	Units
I_{IH}	Input High Current	CLK	$V_{DD} = V_{IN} = 3.465V$			150	µA
		nCLK	$V_{DD} = V_{IN} = 3.465V$			5	µA
I_{IL}	Input Low Current	CLK	$V_{DD} = 3.465V$, $V_{IN} = 0V$	-5			µA
		nCLK	$V_{DD} = 3.465V$, $V_{IN} = 0V$	-150			µA
V_{PP}	Peak-to-Peak Voltage; NOTE 1			0.15		1.3	V
V_{CMR}	Common Mode Input Voltage; NOTE 1, 2			GND + 0.5		V_{DD} – 0.85	V

NOTE 1: V_{IL} should not be less than -0.3V.
NOTE 2: Common mode input voltage is defined as V_{IH}.

Table 4D. LVDS DC Characteristics, $V_{DD} = V_{DDA} = V_{DDO} = 3.3V \pm 5\%$, $T_A = 0°C$ to 70°C

Symbol	Parameter	Test Conditions	Minimum	Typical	Maximum	Units
V_{OD}	Differential Output Voltage		275	375	485	mV
ΔV_{OD}	V_{OD} Magnitude Change				50	mV
V_{OS}	Offset Voltage		1.2	1.35	1.5	V
ΔV_{OS}	V_{OS} Magnitude Change				50	mV

Table 5. AC Characteristics, $V_{DD} = V_{DDA} = V_{DDO} = 3.3V \pm 5\%$, $T_A = 0°C$ to 70°C

Symbol	Parameter	Test Conditions	Minimum	Typical	Maximum	Units
f_{MAX}	Output Frequency		98		320	MHz
*t*jit(cc)	Cycle-to-Cycle Jitter; NOTE 1				35	ps
tsk(o)	Output Skew; NOTE 2, 3				145	ps
tsk(b)	Bank Skew; NOTE 1, 4	Bank A			55	ps
t_R / t_F	Output Rise/Fall Time	20% to 80%	275		725	ps
odc	Output Duty Cycle		47		53	%

NOTE: Electrical parameters are guaranteed over the specified ambient operating temperature range, which is established when the device is mounted in a test socket with maintained transverse airflow greater than 500 lfpm. The device will meet specifications after thermal equilibrium has been reached under these conditions.
NOTE 1: This parameter is defined in accordance with JEDEC Standard 65.
NOTE 2: Defined as skew between outputs at the same supply voltage and with equal load conditions. Measured at the differential cross points.
NOTE 3: These parameters are guaranteed by characterization. Not tested in production.
NOTE 4: Defined as skew within a bank of outputs at the same voltage and with equal load conditions.

 ©2010 Integrated Device Technology, Inc.

Parameter Measurement Information

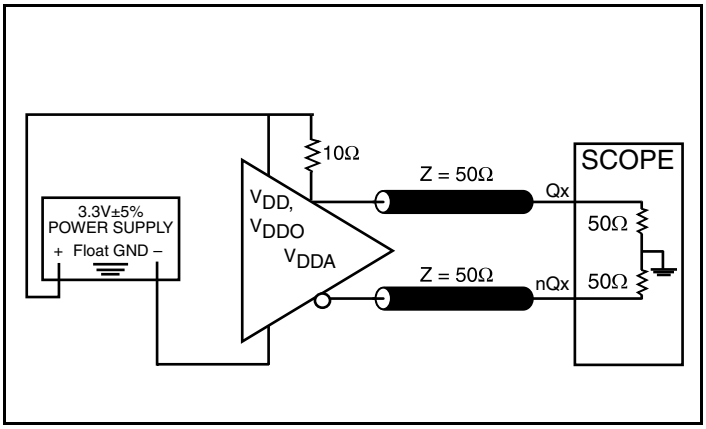

3.3V LVDS Output Load AC Test Circuit

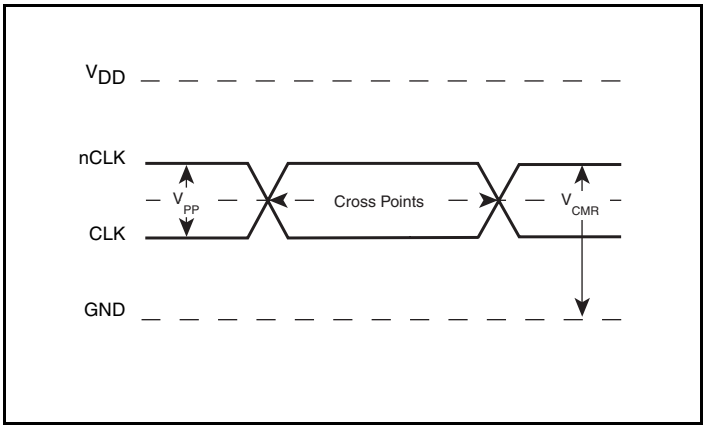

Differential Input Level

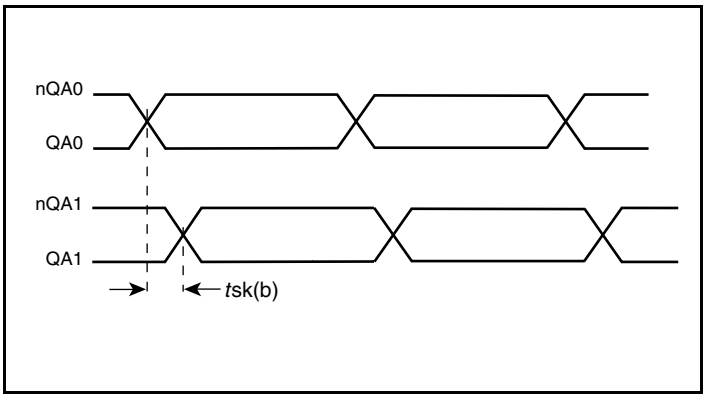

Bank Skew

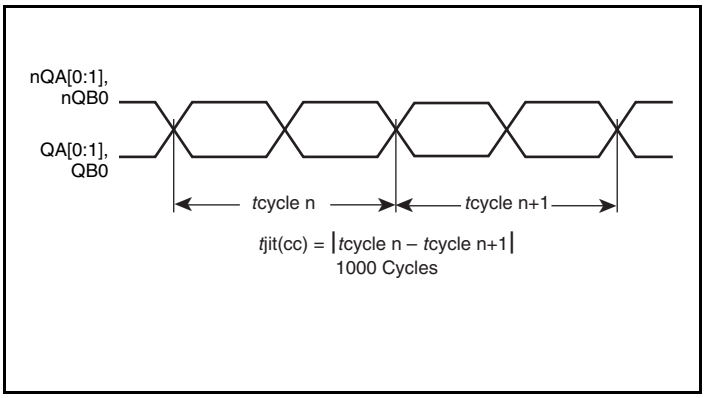

Cycle-to-Cycle Jitter

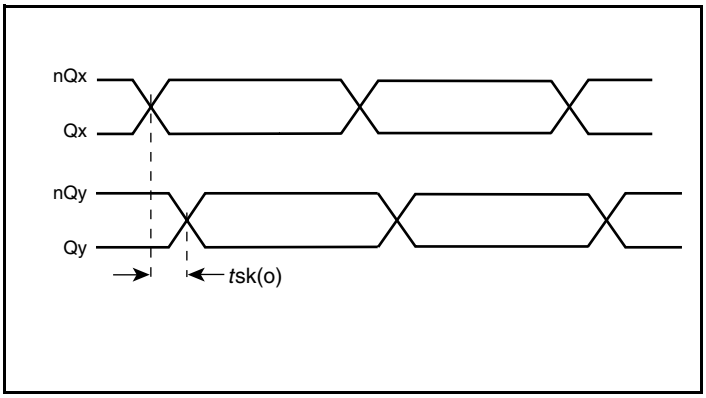

Output Skew

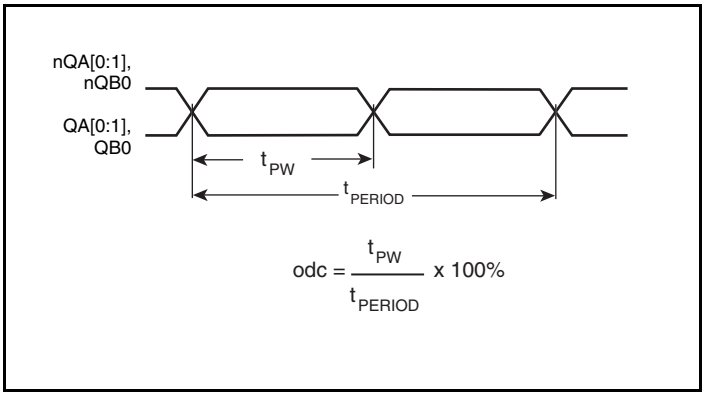

Output Duty Cycle/Pulse Width/Period

 ©2010 Integrated Device Technology, Inc.

Parameter Measurement Information, continued

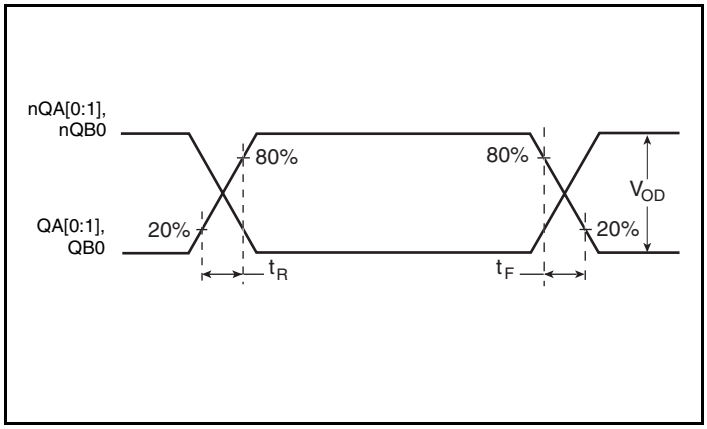

Output Rise/Fall Time

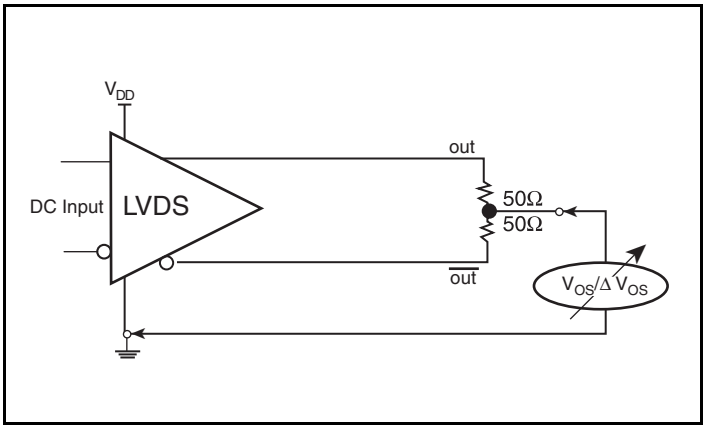

Offset Voltage Setup

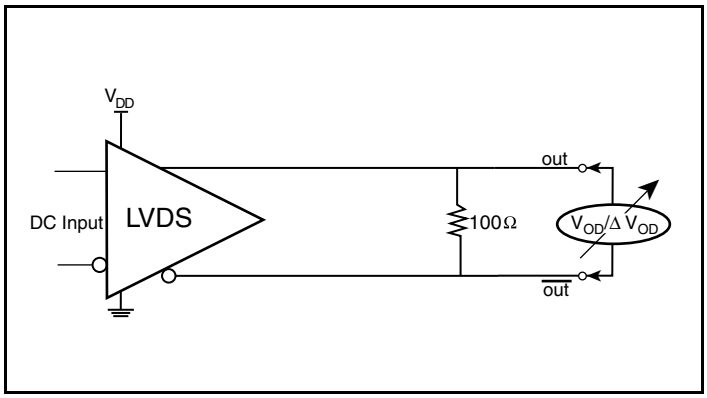

Differential Output Voltage Setup

 ©2010 Integrated Device Technology, Inc.

Applications Information

Power Supply Filtering Technique

As in any high speed analog circuitry, the power supply pins are vulnerable to random noise. To achieve optimum jitter performance, power supply isolation is required. The ICS874003-02 provides separate power supplies to isolate any high switching noise from the outputs to the internal PLL. V_{DD}, V_{DDA} and V_{DDO} should be individually connected to the power supply plane through vias, and 0.01µF bypass capacitors should be used for each pin. *Figure 1* illustrates this for a generic V_{DD} pin and also shows that V_{DDA} requires that an additional 10Ω resistor along with a 10µF bypass capacitor be connected to the V_{DDA} pin.

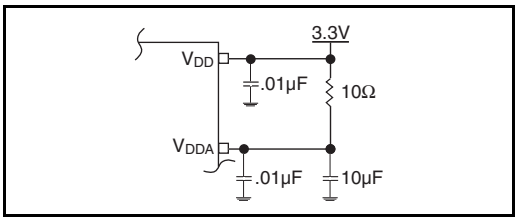

Figure 1. Power Supply Filtering

Wiring the Differential Input to Accept Single-Ended Levels

Figure 1 shows how a differential input can be wired to accept single ended levels. The reference voltage $V_{REF} = V_{DD}/2$ is generated by the bias resistors R1 and R2. The bypass capacitor (C1) is used to help filter noise on the DC bias. This bias circuit should be located as close to the input pin as possible. The ratio of R1 and R2 might need to be adjusted to position the V_{REF} in the center of the input voltage swing. For example, if the input clock swing is 2.5V and V_{DD} = 3.3V, R1 and R2 value should be adjusted to set V_{REF} at 1.25V. The values below are for when both the single ended swing and V_{DD} are at the same voltage. This configuration requires that the sum of the output impedance of the driver (Ro) and the series resistance (Rs) equals the transmission line impedance. In addition, matched termination at the input will attenuate the signal in half. This can be done in one of two ways. First, R3 and R4 in parallel should equal the transmission line impedance. For most 50Ω applications, R3 and R4 can be 100Ω. The values of the resistors can be increased to reduce the loading for slower and weaker LVCMOS driver. When using single-ended signaling, the noise rejection benefits of differential signaling are reduced. Even though the differential input can handle full rail LVCMOS signaling, it is recommended that the amplitude be reduced. The datasheet specifies a lower differential amplitude, however this only applies to differential signals. For single-ended applications, the swing can be larger, however V_{IL} cannot be less than -0.3V and V_{IH} cannot be more than V_{DD} + 0.3V. Though some of the recommended components might not be used, the pads should be placed in the layout. They can be utilized for debugging purposes. The datasheet specifications are characterized and guaranteed by using a differential signal.

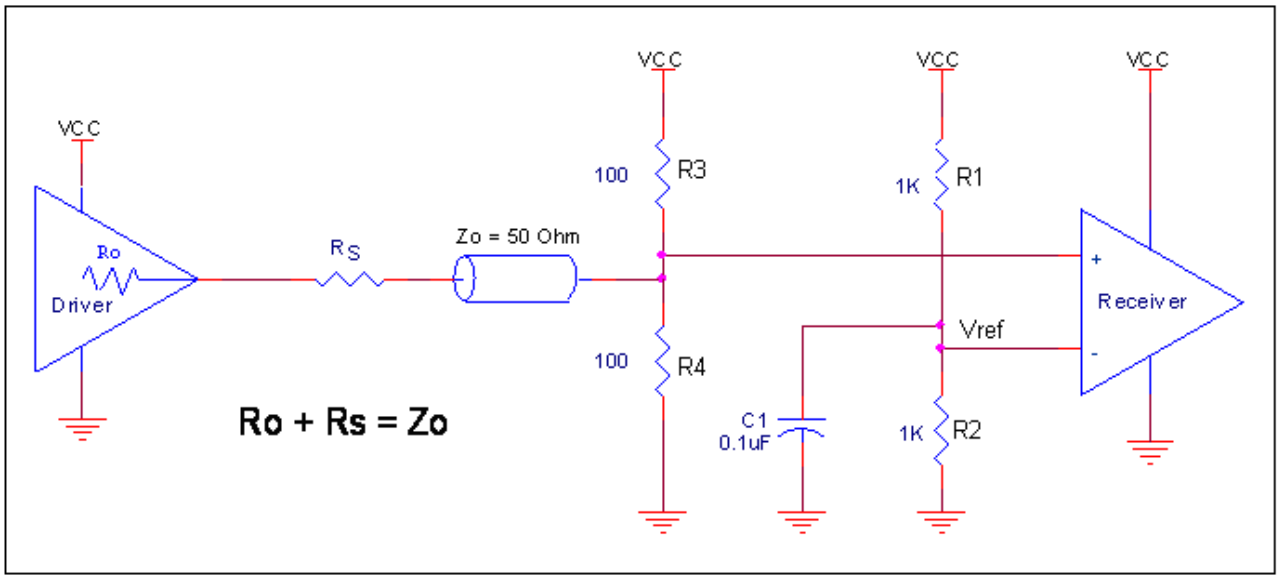

Figure 1. Recommended Schematic for Wiring a Differential Input to Accept Single-ended Levels

 ©2010 Integrated Device Technology, Inc.

Differential Clock Input Interface

The CLK /nCLK accepts LVDS, LVPECL, LVHSTL, SSTL, HCSL and other differential signals. The differential signal must meet the V_{PP} and V_{CMR} input requirements. *Figures 3A to 3F* show interface examples for the CLK/nCLK input driven by the most common driver types. The input interfaces suggested here are examples only.

Please consult with the vendor of the driver component to confirm the driver termination requirements. For example, in Figure 3A, the input termination applies for IDT open emitter LVHSTL drivers. If you are using an LVHSTL driver from another vendor, use their termination recommendation.

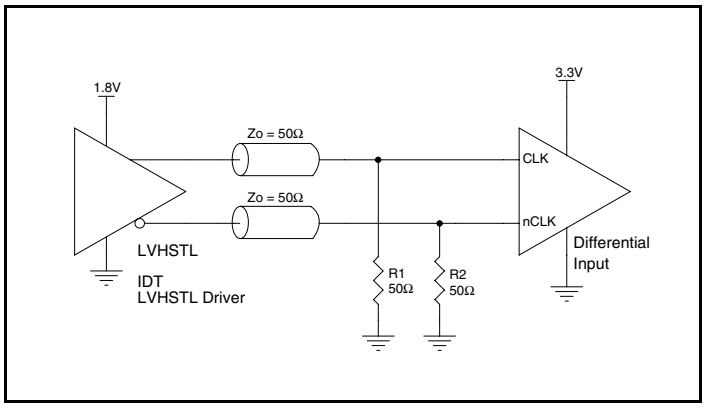

Figure 3A.CLK/nCLK Input Driven by an IDT Open Emitter LVHSTL Driver

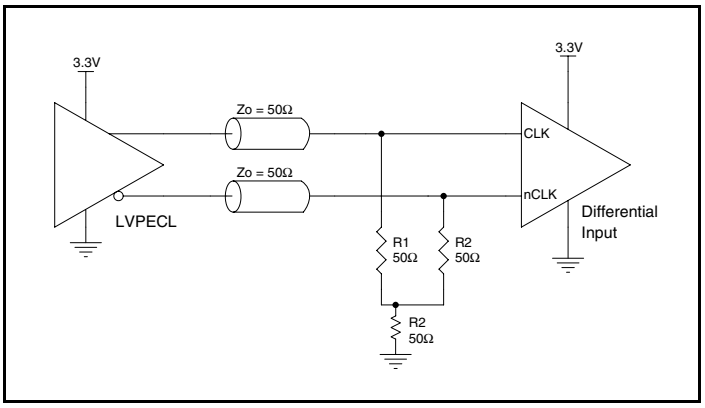

Figure 3B. CLK/nCLK Input Driven by a 3.3V LVPECL Driver

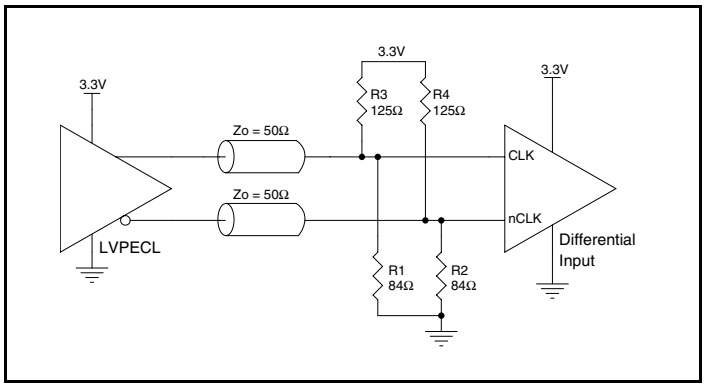

Figure 3C. CLK/nCLK Input Driven by a 3.3V LVPECL Driver

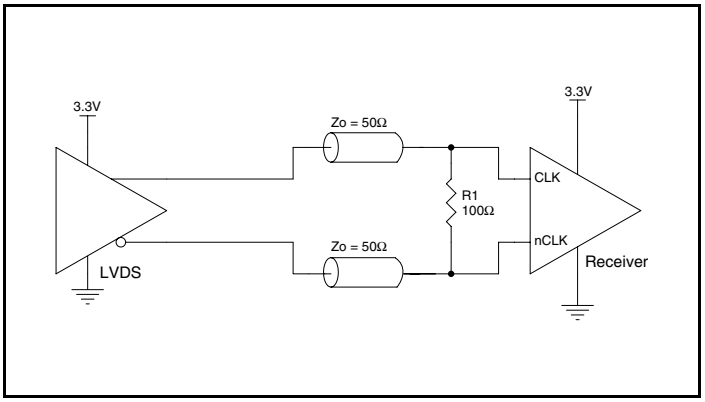

Figure 3D. CLK/nCLK Input Driven by a 3.3V LVDS Driver

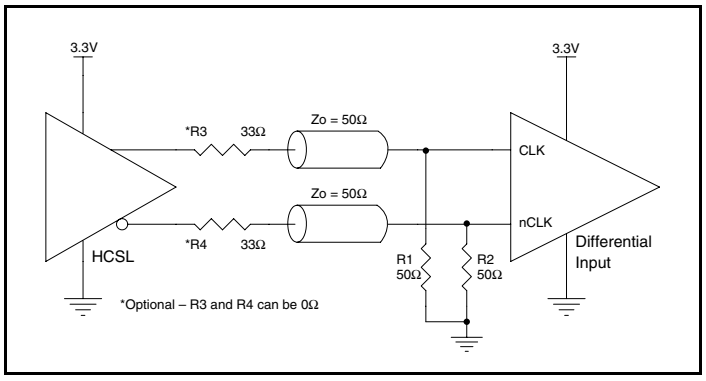

Figure 3E. CLK/nCLK Input Driven by a 3.3V HCSL Driver

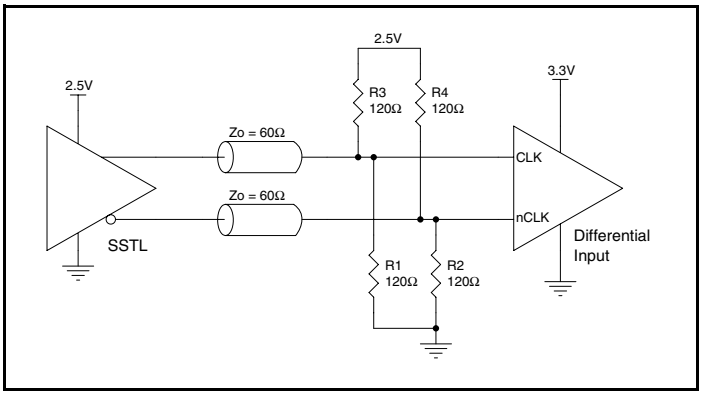

Figure 3F. CLK/nCLK Input Driven by a 2.5V SSTL Driver

 ©2010 Integrated Device Technology, Inc.

Recommendations for Unused Input and Output Pins

Inputs:

LVCMOS Control Pins

All control pins have internal pullups or pulldowns; additional resistance is not required but can be added for additional protection. A 1kΩ resistor can be used.

Outputs:

LVDS Outputs

All unused LVDS output pairs can be either left floating or terminated with 100Ω across. If they are left floating, there should be no trace attached.

LVDS Driver Termination

A general LVDS interface is shown in *Figure 4.* Standard termination for LVDS type output structure requires both a 100Ω parallel resistor at the receiver and a 100Ω differential transmission line environment. In order to avoid any transmission line reflection issues, the 100Ω resistor must be placed as close to the receiver as possible. IDT offers a full line of LVDS compliant devices with two types of output structures: current source and voltage source. The standard termination schematic as shown in Figure 4 can be used with either type of output structure. If using a non-standard termination, it is recommended to contact IDT and confirm if the output is a current source or a voltage source type structure. In addition, since these outputs are LVDS compatible, the amplitude and common mode input range of the input receivers should be verified for compatibility with the output.

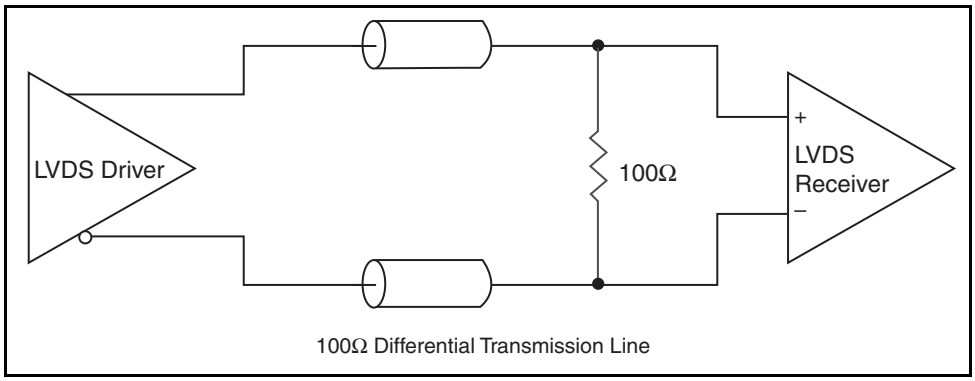

Figure 4. Typical LVDS Driver Termination

 ©2010 Integrated Device Technology, Inc.

Power Considerations

This section provides information on power dissipation and junction temperature for the ICS874003-02.
Equations and example calculations are also provided.

1. Power Dissipation.

The total power dissipation for the ICS74003-02 is the sum of the core power plus the analog power plus the power dissipated in the load(s). The following is the power dissipation for V_{DD} = 3.3V + 5% = 3.465V, which gives worst case results.

- Power (core)$_{MAX}$ = V_{DD_MAX} * (I_{DD_MAX} + I_{DDA_MAX}) = 3.465V * (75mA + 12mA) = **301.45mW**
- Power (outputs)$_{MAX}$ = V_{DDO_MAX} * I_{DDO_MAX} = 3.465V * 75mA = **259.87mW**

Total Power$_{_MAX}$ = 301.45mW + 259.87mW = **561.32mW**

•

2. Junction Temperature.

Junction temperature, Tj, is the temperature at the junction of the bond wire and bond pad directly affects the reliability of the device. The maximum recommended junction temperature is 125°C. Limiting the internal transistor junction temperature, Tj, to 125°C ensures that the bond wire and bond pad temperature remains below 125°C.

The equation for Tj is as follows: Tj = θ_{JA} * Pd_total + T_A

Tj = Junction Temperature

θ_{JA} = Junction-to-Ambient Thermal Resistance

Pd_total = Total Device Power Dissipation (example calculation is in section 1 above)

T_A = Ambient Temperature

In order to calculate junction temperature, the appropriate junction-to-ambient thermal resistance θ_{JA} must be used. Assuming a moderate air flow of 200 linear feet per minute and a multi-layer board, the appropriate value is 66.6°C/W per Table 6 below.

Therefore, Tj for an ambient temperature of 70°C with all outputs switching is:

70°C + 0.561W * 66.6°C/W = 107.3°C. This is below the limit of 125°C.

This calculation is only an example. Tj will obviously vary depending on the number of loaded outputs, supply voltage, air flow and the type of board (multi-layer).

Table 6. Thermal Resistance θ_{JA} for 20 Lead TSSOP, Forced Convection

θ_{JA} by Velocity			
Linear Feet per Minute	**0**	**200**	**500**
Single-Layer PCB, JEDEC Standard Test Boards	114.5°C/W	98.0°C/W	88.0°C/W
Multi-Layer PCB, JEDEC Standard Test Boards	73.2°C/W	66.6°C/W	63.5°C/W
NOTE: Most modern PCB designs use multi-layered boards. The data in the second row pertains to most designs.			

 ©2010 Integrated Device Technology, Inc.

Reliability Information

Table 7. θ_{JA} vs. Air Flow Table for a 20 Lead TSSOP

θ_{JA} by Velocity			
Linear Feet per Minute	**0**	**200**	**500**
Single-Layer PCB, JEDEC Standard Test Boards	114.5°C/W	98.0°C/W	88.0°C/W
Multi-Layer PCB, JEDEC Standard Test Boards	73.2°C/W	66.6°C/W	63.5°C/W
NOTE: Most modern PCB designs use multi-layered boards. The data in the second row pertains to most designs.			

Transistor Count

The transistor count for ICS874003-02 is: 1408

Package Outline and Package Dimensions

Package Outline - G Suffix for 20 Lead TSSOP

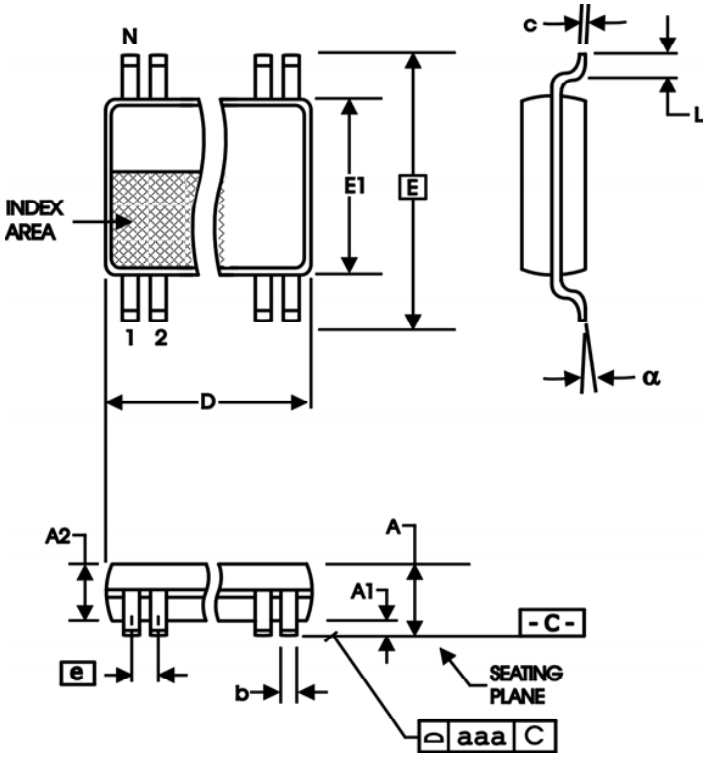

Table 8. Package Dimensions

All Dimensions in Millimeters		
Symbol	**Minimum**	**Maximum**
N	20	
A		1.20
A1	0.05	0.15
A2	0.80	1.05
b	0.19	0.30
c	0.09	0.20
D	6.40	6.60
E	6.40 Basic	
E1	4.30	4.50
e	0.65 Basic	
L	0.45	0.75
α	0°	8°
aaa		0.10

Reference Document: JEDEC Publication 95, MO-153

 ©2010 Integrated Device Technology, Inc.

Ordering Information

Table 9. Ordering Information

Part/Order Number	Marking	Package	Shipping Packaging	Temperature
874003AG-02	ICS874003A02	20 Lead TSSOP	Tube	0°C to 70°C
874003AG-02T	ICS874003A02	20 Lead TSSOP	2500 Tape & Reel	0°C to 70°C
874003AG-02LF	ICS74003A02L	“Lead-Free” 20 Lead TSSOP	Tube	0°C to 70°C
874003AG-02LFT	ICS74003A02L	“Lead-Free” 20 Lead TSSOP	2500 Tape & Reel	0°C to 70°C

NOTE: Parts that are ordered with an "LF" suffix to the part number are the Pb-Free configuration and are RoHS compliant.

While the information presented herein has been checked for both accuracy and reliability, Integrated Device Technology (IDT) assumes no responsibility for either its use or for the infringement of any patents or other rights of third parties, which would result from its use. No other circuits, patents, or licenses are implied. This product is intended for use in normal commercial applications. Any other applications, such as those requiring extended temperature ranges, high reliability or other extraordinary environmental requirements are not recommended without additional processing by IDT. IDT reserves the right to change any circuitry or specifications without notice. IDT does not authorize or warrant any IDT product for use in life support devices or critical medical instruments.

Revision History Sheet

Rev	Table	Page	Description of Change	Date
B		1	Updated General Description and Features section.	9/14/10
	T1	3	Pin Description Table - corrected MR description	
	T4C	5	Differential DC Characteristics Table - updated notes. Added Units to I_{IH}/I_{IL} rows.	
	T5	5	Corrected I_{IH} (nCLK) spec from 5uA min to 5uA max. Corrected I_{IL} CLK from 150uA max to -5uA min.	
		5	AC Characteristics Table - added thermal note, corrected NOTE 2.	
		6 - 7	Parameter Measurement Information - corrected Bank Skew labels, corrected Output Rise/Fall Time diagram.	
		8	Updated *Wiring the Differential Input to Accept Single-ended Levels.*	
		9	Updated *Differential Clock Input Interface.*	
		10	Updated *LVDS Driver Termination.*	
		13	Ordering Information Table - deleted "ICS" prefix in Part/Order column, added "ICS" prefix to marking column.	
			Converted datasheet format.	

 ©2010 Integrated Device Technology, Inc.

We've Got Your Timing Solution

www.IDT.com

6024 Silver Creek Valley Road
San Jose, California 95138

Sales
800-345-7015 (inside USA)
+408-284-8200 (outside USA)
Fax: 408-284-2775
www.IDT.com/go/contactIDT

Technical Support
netcom@idt.com
+480-763-2056

DISCLAIMER Integrated Device Technology, Inc. (IDT) and its subsidiaries reserve the right to modify the products and/or specifications described herein at any time and at IDT's sole discretion. All information in this document, including descriptions of product features and performance, is subject to change without notice. Performance specifications and the operating parameters of the described products are determined in the independent state and are not guaranteed to perform the same way when installed in customer products. The information contained herein is provided without representation or warranty of any kind, whether express or implied, including, but not limited to, the suitability of IDT's products for any particular purpose, an implied warranty of merchantability, or non-infringement of the intellectual property rights of others. This document is presented only as a guide and does not convey any license under intellectual property rights of IDT or any third parties.

IDT's products are not intended for use in life support systems or similar devices where the failure or malfunction of an IDT product can be reasonably expected to significantly affect the health or safety of users. Anyone using an IDT product in such a manner does so at their own risk, absent an express, written agreement by IDT.

Integrated Device Technology, IDT and the IDT logo are registered trademarks of IDT. Other trademarks and service marks used herein, including protected names, logos and designs, are the property of IDT or their respective third party owners.

Copyright 2010. All rights reserved.