PRELIMINARY

Integrated Circuit Systems, Inc.

ICS85354
DUAL 2:1/1:2 DIFFERENTIAL -TO-LVPECL/ECL MULTIPLEXER

GENERAL DESCRIPTION

The ICS85354 is a 2:1/1:2 Multiplexer and a member of the HiPerClockS™ family of high performance clock solutions from ICS. The 2:1 Multiplexer allows one of 2 inputs to be selected onto one output pin and the 1:2 MUX switches one input to one of two outputs. This device may be useful for multiplexing multi-rate Ethernet Phys which have 100Mbit and 1000Mbit transmit/receive pairs onto an optical SFP module which has a single trasmit/receive pair. Please refer to the Application Block diagram on page 2 of the data sheet.

The ICS85354 is optimized for applications requiring very high performance and has a maximum operating frequency in excess of 2GHz. The device is packaged in a small, 3mm x 3mm VFQFN package, making it ideal for use on space-constrained boards.

FEATURES

- Dual 2:1/1:2 MUX
- 3 LVPECL outputs
- 3 differential clock inputs
- CLKx pair can accept the following differential input levels: LVPECL, LVDS, CML
- Maximum output frequency: 3GHz
- Part-to-part skew: 85ps (typical)
- Additive jitter, RMS: 0.03ps (typical)
- Propagation delay: 330ps (typical)
- LVPECL mode operating voltage supply range: V_{CC} = 2.375V to 3.465V, V_{EE} = 0V
- ECL mode operating voltage supply range: V_{CC} = 0V, V_{EE} = -3.465V to -2.375V
- -40°C to 85°C ambient operating temperature

BLOCK DIAGRAM

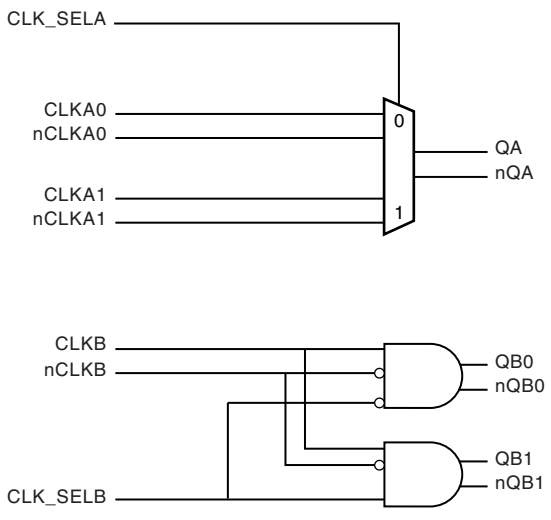

PIN ASSIGNMENT

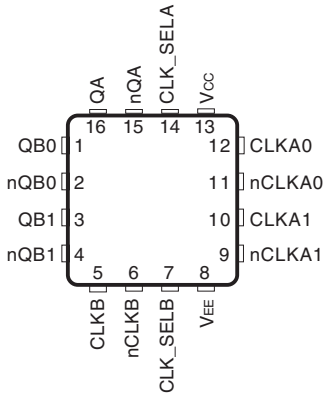

ICS85354
16-Lead VFQFN
3mm x 3mm x 0.95 package body
K Package
Top View

The Preliminary Information presented herein represents a product in prototyping or pre-production. The noted characteristics are based on initial product characterization. Integrated Circuit Systems, Incorporated (ICS) reserves the right to change any circuitry or specifications without notice.

A TYPICAL APPLICATION FOR THE ICS85354

Used to connect a multi-rate PHY with the Tx/Rx pins of an SFP Module.

Problem Addressed: How to mape the 2 Tx/Rx pairs of the multi-rate PHY to the single Tx/Rx pair on the SFP Module.

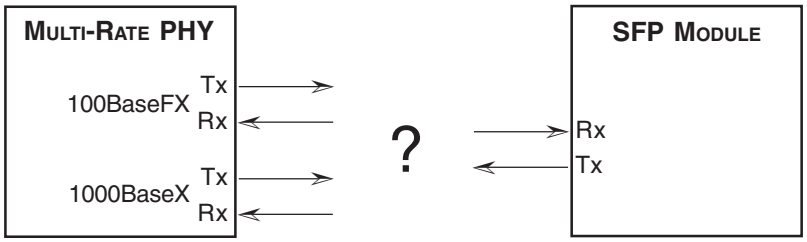

MODE 1, 100BASEX CONNECTED TO SFP

All lines are differential pairs, but drawn as single-ended to simplify the drawing.

Bold red lines ——— are active connections highlighting the signal path.

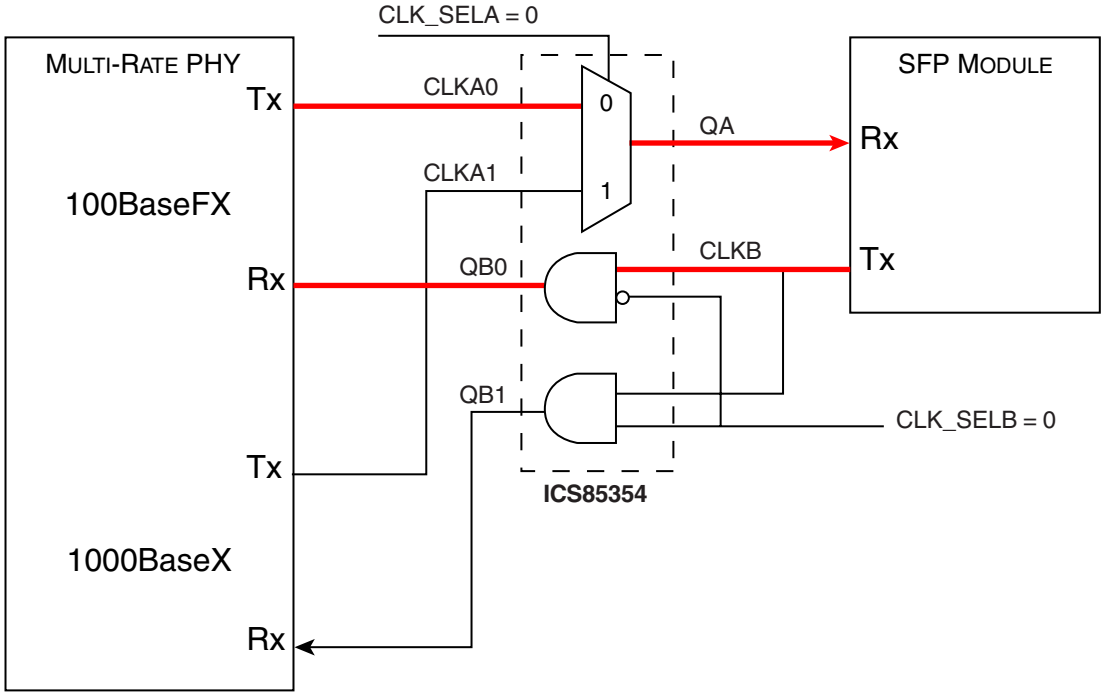

MODE 2, 1000BASEX CONNECTED TO SFP

All lines are differential pairs, but drawn as single-ended to simplify the drawing.

Bold red lines ——— are active connections highlighting the signal path.

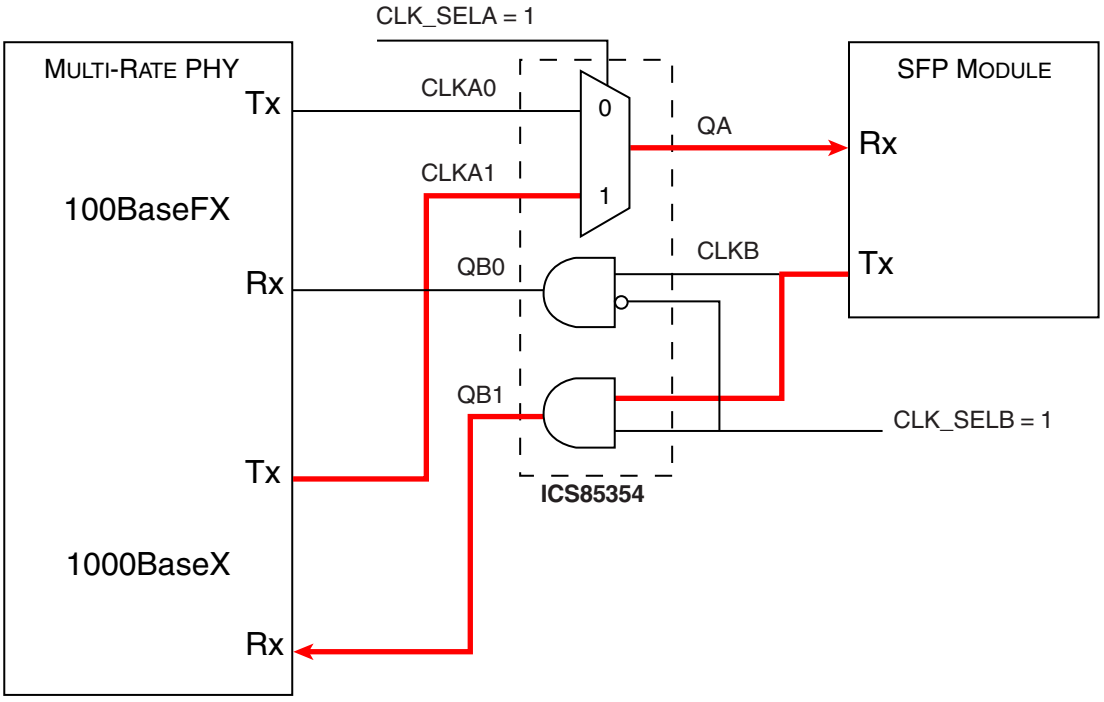

TABLE 1. PIN DESCRIPTIONS

Number	Name	Type		Description
1, 2	QB0, nQB0	Output		Differential output pair. LVPECL/ECL interface levels.
3, 4	QB1, nQB1	Output		Differential output pair. LVPECL/ECL interface levels.
5	CLKB	Input	Pulldown	Non-inverting LVPECL/ECL differential clock input.
6	nCLKB	Input	Pullup/ Pulldown	Inverting differential LVPECL clock input. V_{CC}/2 default when left floating.
7	CLK_SELB	Input	Pulldown	Clock select pin for QBx outputs. When HIGH, selects QB1, nQB1 outputs. When LOW, selects QB0, nQB0 outputs. LVCMOS/LVTTL interface levels.
8	V_{EE}	Power		Negative supply pin.
9	nCLKA1	Input	Pullup/ Pulldown	Inverting differential LVPECL clock input. V_{CC}/2 default when left floating.
10	CLKA1	Input	Pulldown	Non-inverting LVPECL differential clock input.
11	nCLKA0	Input	Pullup/ Pulldown	Inverting differential LVPECL clock input. V_{CC}/2 default when left floating.
12	CLKA0	Input	Pulldown	Non-inverting LVPECL differential clock input.
13	V_{CC}	Power		Positive supply pin.
14	CLK_SELA	Input	Pulldown	Clock select pin for QA outputs. When HIGH, selects QA output. When LOW, selects nQA output. LVCMOS/LVTTL interface levels.
15, 16	nQA, QA	Output		Differential output pair. LVPECL/ECL interface levels.

NOTE: *Pulldown and Pullup* refer to internal input resistors. See Table 2, Pin Characteristics, for typical values.

TABLE 2. PIN CHARACTERISTICS

Symbol	Parameter	Test Conditions	Minimum	Typical	Maximum	Units
$R_{PULLDOWN}$	Input Pulldown Resistor			37.5		KΩ
$R_{VCC/2}$	Pullup/Pulldown Resistors			37.5		KΩ

TABLE 3A. CONTROL INPUT FUNCTION TABLE, BANK A

Bank A	
Control Inputs	**Outputs**
CLK_SELA	**QA, nQA**
0	Selects CLKA0, nCLKA0
1	Selects CLKA1, nCLKA1

TABLE 3B. CONTROL INPUT FUNCTION TABLE, BANK B

Bank B		
Control Inputs	**Outputs**	
CLK_SELB	**QB0, nQB0**	**QB1, nQB1**
0	Follows CLKB input	Low
1	Low	Follows CLKB input

ABSOLUTE MAXIMUM RATINGS

Supply Voltage, V_{CC}	4.6V (LVPECL mode, V_{EE} = 0)
Negative Supply Voltage, V_{EE}	-4.6V (ECL mode, V_{CC} = 0)
Inputs, V_I (LVPECL mode)	-0.5V to V_{CC} + 0.5 V
Inputs, V_I (ECL mode)	0.5V to V_{EE} - 0.5V
Outputs, I_O	
Continuous Current	50mA
Surge Current	100mA
Operating Temperature Range, TA	-40°C to +85°C
Storage Temperature, T_{STG}	-65°C to 150°C
Package Thermal Impedance, θ_{JA} (Junction-to-Ambient)	51.5°C/W (0 lfpm)

NOTE: Stresses beyond those listed under Absolute Maximum Ratings may cause permanent damage to the device. These ratings are stress specifications only. Functional operation of product at these conditions or any conditions beyond those listed in the *DC Characteristics* or *AC Characteristics* is not implied. Exposure to absolute maximum rating conditions for extended periods may affect product reliability.

TABLE 4A. POWER SUPPLY DC CHARACTERISTICS, V_{CC} = 2.375V TO 3.465V, V_{EE} = 0V OR V_{CC} = 0V, V_{EE} = -3.465V TO -2.375V

Symbol	Parameter	Test Conditions	Minimum	Typical	Maximum	Units
V_{CC}	Positive Supply Voltage		3.135	3.3	3.465	V
			2.375	2.5	2.625	V
I_{EE}	Power Supply Current			38		mA

TABLE 4B. LVCMOS / LVTTL DC CHARACTERISTICS, V_{CC} = 2.375V TO 3.465V

Symbol	Parameter		Test Conditions	Minimum	Typical	Maximum	Units
V_{IH}	Input High Voltage	CLK_SELx	V_{CC} = 2.5V or 3.3V	2		V_{CC} + 0.3	V
V_{IL}	Input Low Voltage	CLK_SELx	V_{CC} = 2.5V or 3.3V	0		0.8	V
I_{IH}	Input High Current	CLK_SELA, CLK_SELB	V_{CC} = V_{IN} = 3.465V, V_{CC} = V_{IN} = 2.625V			150	µA
I_{IL}	Input Low Current	CLK_SELA, CLK_SELB	V_{CC} = 3.465 2.625V, V_{IN} = 0V	-150			µA

TABLE 4C. LVPECL DC CHARACTERISTICS, V_{CC} = 3.3V, V_{EE} = 0V

Symbol	Parameter		-40°C			25°C			85°C			Units
			Min	Typ	Max	Min	Typ	Max	Min	Typ	Max	
V_{OH}	Output High Voltage; NOTE 1		V_{CC}-1.125	V_{CC}-1.025	V_{CC}-0.92	V_{CC}-1.075	V_{CC}-1.005	V_{CC}-0.93	V_{CC}-1.005	V_{CC}-0.97	V_{CC}-0.935	V
V_{OL}	Output Low Voltage; NOTE 1		V_{CC}-1.895	V_{CC}-1.755	V_{CC}-1.62	V_{CC}-1.875	V_{CC}-1.78	V_{CC}-1.685	V_{CC}-1.86	V_{CC}-1.765	V_{CC}-1.67	V
V_{PP}	Peak-to-Peak Input Voltage		150	800	1200	150	800	1200	150	800	1200	mV
V_{CMR}	Input High Voltage Common Mode Range; NOTE 2, 3		1.2		V_{CC}	1.2		V_{CC}	1.2		V_{CC}	V
I_{IH}	Input High Current	CLKAx, CLKB nCLKAx, nCLKB			150			150			150	µA
I_{IL}	Input Low Current	CLKAx, CLKB	-10			-10			-10			µA
		nCLKAx, nCLKB	-150			-150			-150			µA

Input and output parameters vary 1:1 with V_{CC}. V_{CC} can vary +0.165V to -0.925V.
NOTE 1: Outputs terminated with 50Ω to V_{CC} - 2V.
NOTE 2: Common mode voltage is defined as V_{IH}.
NOTE 3: For single-ended applications, the maximum input voltage for CLKAx, nCLKAx and CLKB, nCLKB is V_{CC} + 0.3V.

TABLE 4D. ECL DC CHARACTERISTICS, V_{EE} = -3.465V TO -2.375V, V_{CC} = 0V

Symbol	Parameter		-40°C			25°C			85°C			Units
			Min	Typ	Max	Min	Typ	Max	Min	Typ	Max	
V_{OH}	Output High Voltage; NOTE 1		-1.125	-1.025	-0.92	-1.075	-1.005	-0.93	-1.005	-0.97	-0.935	V
V_{OL}	Output Low Voltage; NOTE 1		-1.895	-1.755	-1.62	-1.875	-1.78	-1.685	-1.86	-1.765	-1.67	V
V_{PP}	Peak-to-Peak Input Voltage		150	800	1200	150	800	1200	150	800	1200	mV
V_{CMR}	Input High Voltage Common Mode Range; NOTE 2, 3		V_{EE}+1.2V		V_{CC}	V_{EE}+1.2V		V_{CC}	V_{EE}+1.2V		V_{CC}	V
I_{IH}	Input High Current	CLKAx, CLKB nCLKAx, nCLKB			150			150			150	µA
I_{IL}	Input Low Current	CLKAx, CLKB	-10			-10			-10			µA
		nCLKAx, nCLKB	-150			-150			-150			µA

Input and output parameters vary 1:1 with V_{CC}.
NOTE 1: Outputs terminated with 50Ω to V_{CC} - 2V.
NOTE 2: Common mode voltage is defined as V_{IH}.
NOTE 3: For single-ended applications, the maximum input voltage for CLKAx, nCLKAx and CLKB, nCLKB is V_{CC} + 0.3V.

TABLE 5. AC CHARACTERISTICS, V_{CC} = 2.375V TO 3.465V, V_{EE} = 0V OR V_{CC} = 0V, V_{EE} = -3.465V TO -2.375V

Symbol	Parameter		Conditions	Minimum	Typical	Maximum	Units
f_{MAX}	Output Frequency					3	GHz
t_{PD}	Propagation Delay; NOTE 1				330		ps
*t*sk(pp)	Part-to-Part Skew; NOTE 3, 4				85		ps
*t*jit	Buffer Additive Phase Jitter, RMS; refer to Additive Phase Jitter section				0.03		ps
	MUX Isolation				55		dB
t_R/t_F	Output Rise/Fall Time	20% to 80%			170		ps

All parameters are measured ≤ 1GHz unless otherwise noted.
NOTE 1: Measured from the differential input crossing point to the differential output crossing point.
NOTE 2: Defined as skew between outputs at the same supply voltage and with equal load conditions. Measured at the output differential cross points.
NOTE 3: Defined as skew between outputs on different devices operating at the same supply voltages and with equal load conditions. Using the same type of inputs on each device, the outputs are measured at the differential cross points.
NOTE 4: This parameter is defined in accordance with JEDEC Standard 65.

PARAMETER MEASUREMENT INFORMATION

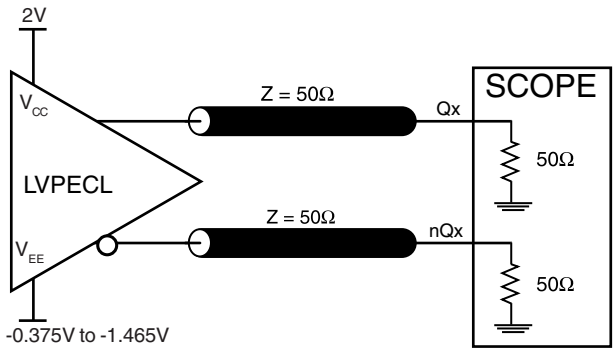

OUTPUT LOAD AC TEST CIRCUIT

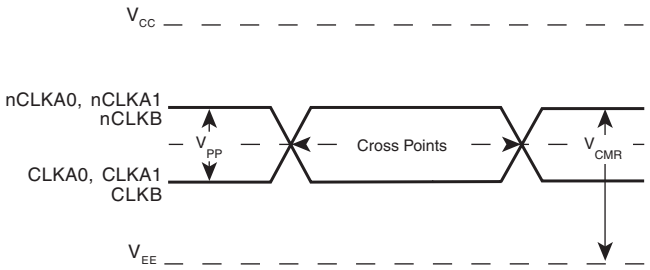

DIFFERENTIAL INPUT LEVEL

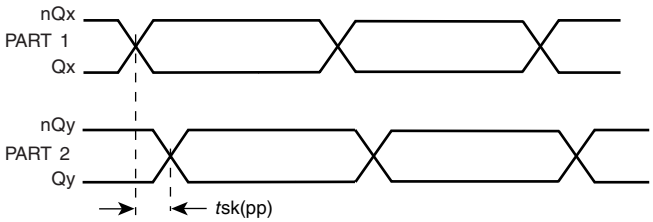

PART-TO-PART SKEW

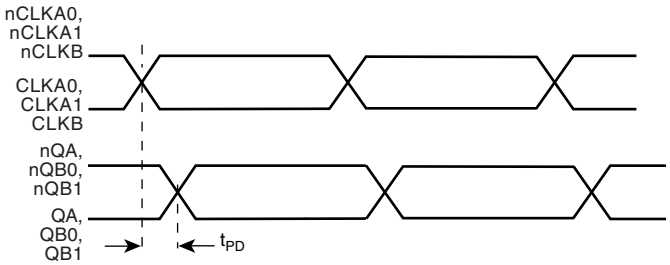

PROPAGATION DELAY

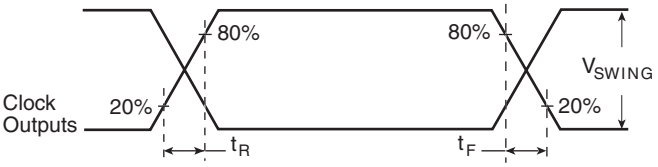

OUTPUT RISE/FALL TIME

APPLICATION INFORMATION

WIRING THE DIFFERENTIAL INPUT TO ACCEPT SINGLE ENDED LEVELS

Figure 1 shows how the differential input can be wired to accept single ended levels. The reference voltage V_REF = V_{CC}/2 is generated by the bias resistors R1, R2 and C1. This bias circuit should be located as close as possible to the input pin. The ratio of R1 and R2 might need to be adjusted to position the V_REF in the center of the input voltage swing. For example, if the input clock swing is only 2.5V and V_{CC} = 3.3V, V_REF should be 1.25V and R2/R1 = 0.609.

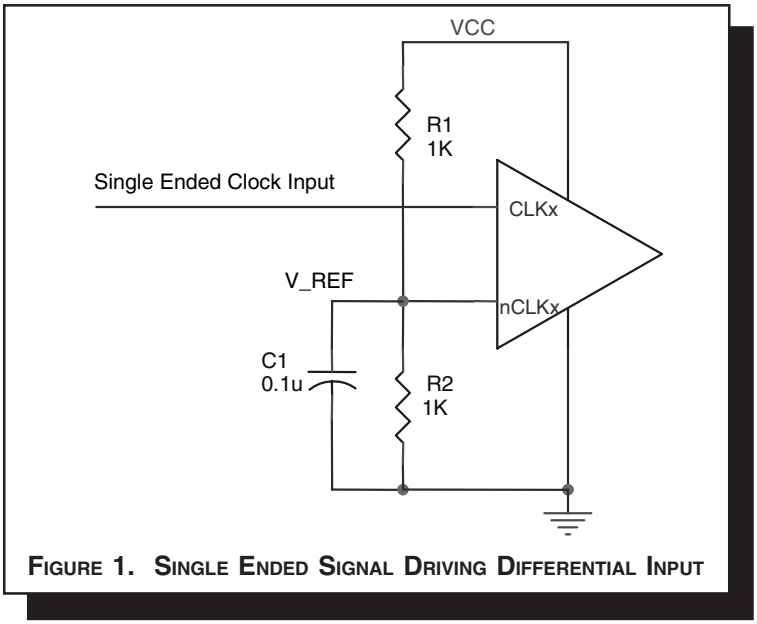

FIGURE 1. SINGLE ENDED SIGNAL DRIVING DIFFERENTIAL INPUT

TERMINATION FOR 3.3V LVPECL OUTPUTS

The clock layout topology shown below is a typical termination for LVPECL outputs. The two different layouts mentioned are recommended only as guidelines.

FOUT and nFOUT are low impedance follower outputs that generate ECL/LVPECL compatible outputs. Therefore, terminating resistors (DC current path to ground) or current sources must be used for functionality. These outputs are designed to drive 50Ω transmission lines. Matched impedance techniques should be used to maximize operating frequency and minimize signal distortion. *Figures 2A and 2B* show two different layouts which are recommended only as guidelines. Other suitable clock layouts may exist and it would be recommended that the board designers simulate to guarantee compatibility across all printed circuit and clock component process variations.

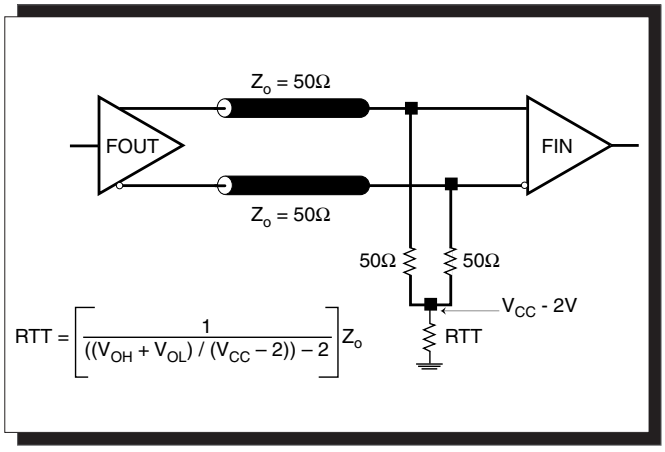

FIGURE 2A. LVPECL OUTPUT TERMINATION

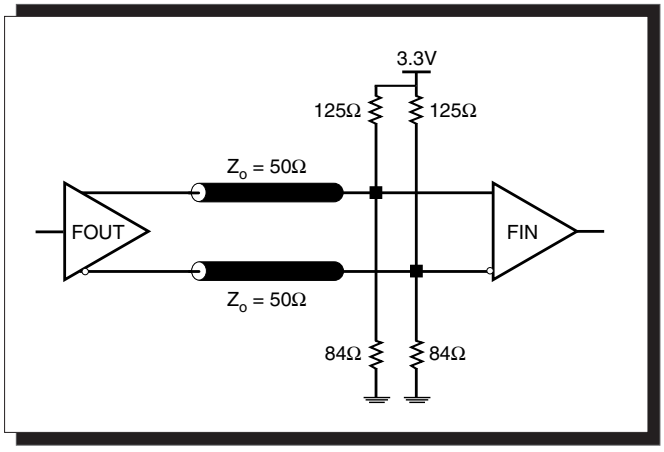

FIGURE 2B. LVPECL OUTPUT TERMINATION

TERMINATION FOR 2.5V LVPECL OUTPUT

Figure 3A and *Figure 3B* show examples of termination for 2.5V LVPECL driver. These terminations are equivalent to terminating 50Ω to V_{CC} - 2V. For V_{CC} = 2.5V, the V_{CC} - 2V is very close to ground level. The R3 in Figure 3B can be eliminated and the termination is shown in *Figure 3C.*

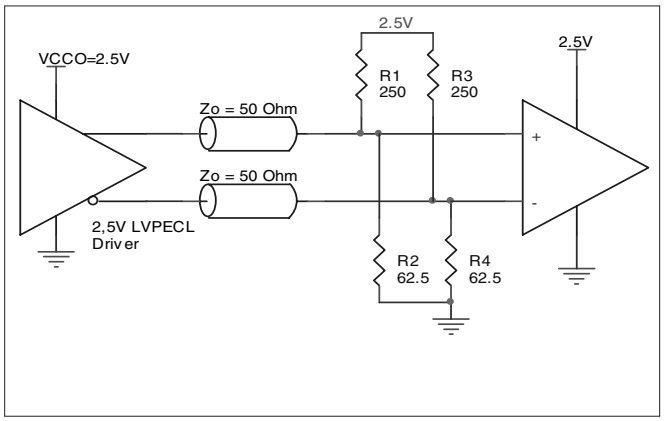

FIGURE 3A. 2.5V LVPECL DRIVER TERMINATION EXAMPLE

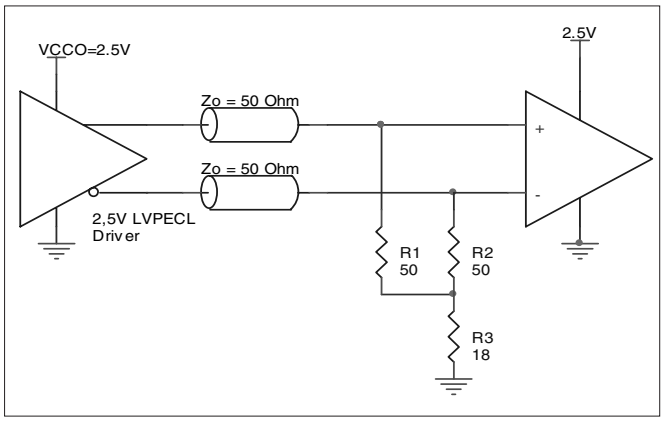

FIGURE 3B. 2.5V LVPECL DRIVER TERMINATION EXAMPLE

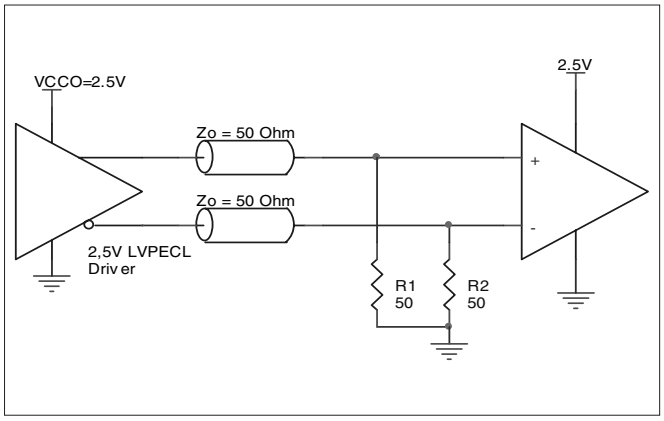

FIGURE 3C. 2.5V LVPECL TERMINATION EXAMPLE

DIFFERENTIAL CLOCK INPUT INTERFACE

The CLK /nCLK accepts LVDS, LVPECL, LVHSTL, SSTL, HCSL and other differential signals. Both V_{SWING} and V_{OH} must meet the V_{PP} and V_{CMR} input requirements. *Figures 4A to 4E* show interface examples for the HiPerClockS CLK/nCLK input driven by the most common driver types. The input interfaces suggested here are examples only. Please consult with the vendor of the driver component to confirm the driver termination requirements. For example in *Figure 4A,* the input termination applies for ICS HiPerClockS LVHSTL drivers. If you are using an LVHSTL driver from another vendor, use their termination recommendation.

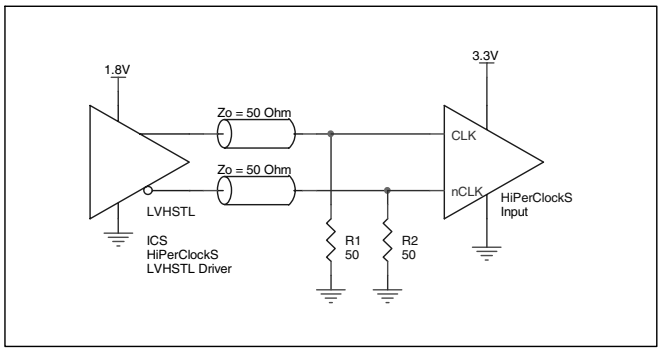

FIGURE 4A. HIPERCLOCKS CLK/NCLK INPUT DRIVEN BY ICS HIPERCLOCKS LVHSTL DRIVER

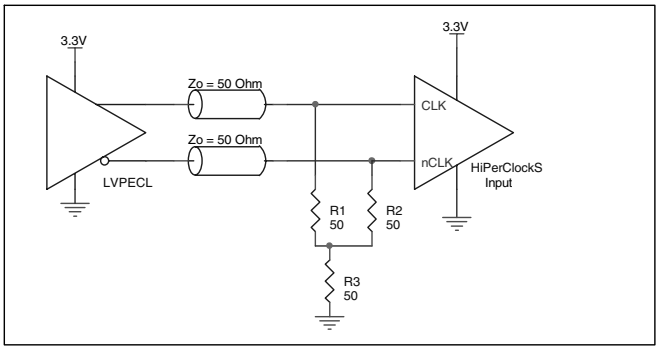

FIGURE 4B. HIPERCLOCKS CLK/NCLK INPUT DRIVEN BY 3.3V LVPECL DRIVER

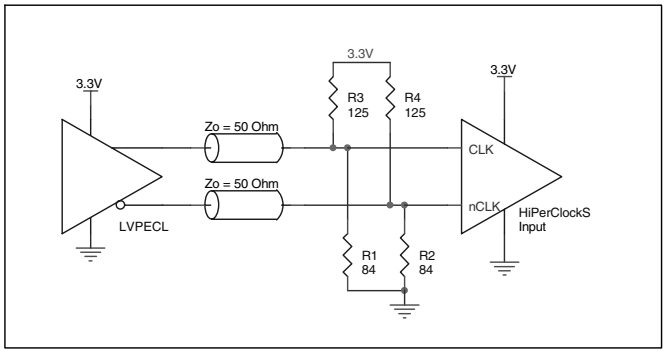

FIGURE 4C. HIPERCLOCKS CLK/NCLK INPUT DRIVEN BY 3.3V LVPECL DRIVER

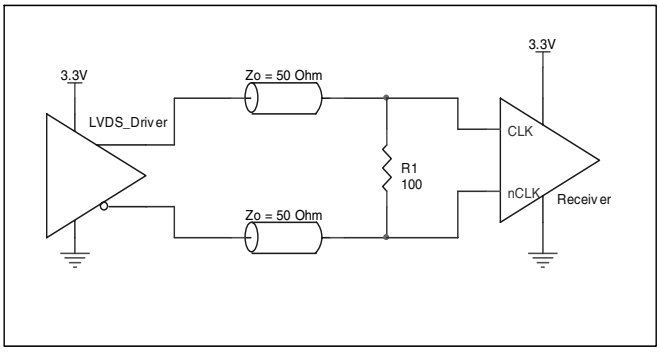

FIGURE 4D. HIPERCLOCKS CLK/NCLK INPUT DRIVEN BY 3.3V LVDS DRIVER

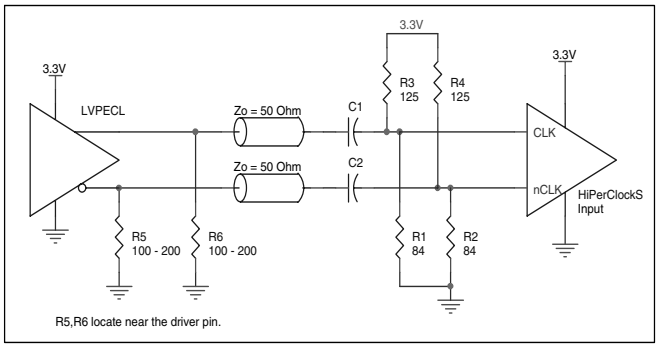

FIGURE 4E. HIPERCLOCKS CLK/NCLK INPUT DRIVEN BY 3.3V LVPECL DRIVER WITH AC COUPLE

POWER CONSIDERATIONS

This section provides information on power dissipation and junction temperature for the ICS85354.
Equations and example calculations are also provided.

1. Power Dissipation.
The total power dissipation for the ICS85354 is the sum of the core power plus the power dissipated in the load(s).
The following is the power dissipation for V_{CC} = 3.465V, which gives worst case results.
NOTE: Please refer to Section 3 for details on calculating power dissipated in the load.

- Power (core)$_{MAX}$ = V_{CC_MAX} * I_{EE_MAX} = 3.465V * 38mA = **131.7mW**
- Power (outputs)$_{MAX}$ = **27.83mW/Loaded Output pair**
  If all outputs are loaded, the total power is 4 * 27.83mW = **111.3mW**

Total Power$_{_MAX}$ (3.465, with all outputs switching) = 131.7mW + 111.3mW = **243mW**

2. Junction Temperature.
Junction temperature, Tj, is the temperature at the junction of the bond wire and bond pad and directly affects the reliability of the device. The maximum recommended junction temperature for HiPerClockS™ devices is 125°C.

The equation for Tj is as follows: $Tj = \theta_{JA} * Pd_total + T_A$

Tj = Junction Temperature

θ_{JA} = Junction-to-Ambient Thermal Resistance

Pd_total = Total Device Power Dissipation (example calculation is in section 1 above)

T_A = Ambient Temperature

In order to calculate junction temperature, the appropriate junction-to-ambient thermal resistance θ_{JA} must be used. Assuming a moderate air flow of 0 linear feet per minute and a multi-layer board, the appropriate value is 51.5°C/W per Table 6 below.

Therefore, Tj for an ambient temperature of 85°C with all outputs switching is:
85°C + 0.243W * 51.5°C/W = 97.5°C. This is well below the limit of 125°C.

This calculation is only an example. Tj will obviously vary depending on the number of loaded outputs, supply voltage, air flow, and the type of board (single layer or multi-layer).

TABLE 6. THERMAL RESISTANCE θ_{JA} FOR 16-PIN VFQFN, FORCED CONVECTION

θ_{JA} by Velocity (Linear Feet per Minute)	
	0
Multi-Layer PCB, JEDEC Standard Test Boards	51.5°C/W

3. Calculations and Equations.

The purpose of this section is to derive the power dissipated into the load.

LVPECL output driver circuit and termination are shown in *Figure 5.*

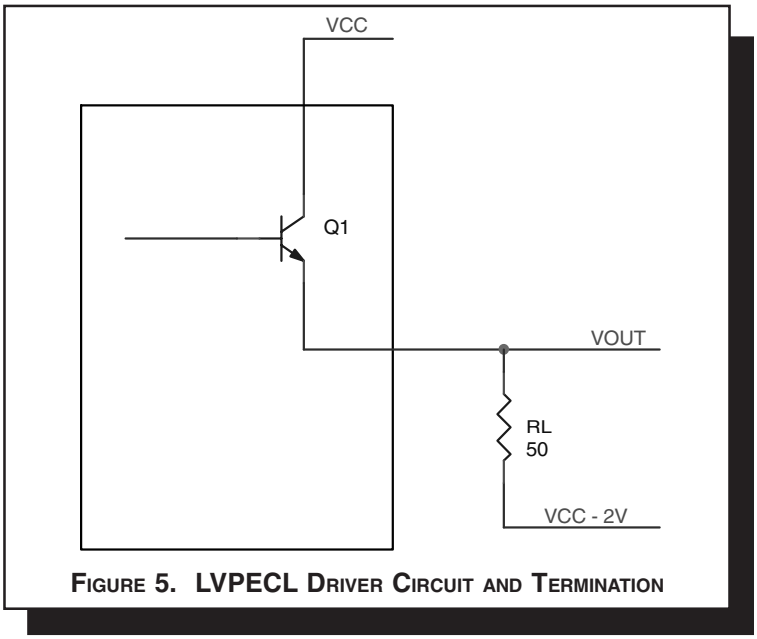

FIGURE 5. LVPECL DRIVER CIRCUIT AND TERMINATION

To calculate worst case power dissipation into the load, use the following equations which assume a 50Ω load, and a termination voltage of V_{CC} - 2V.

- For logic high, $V_{OUT} = V_{OH_MAX} = \mathbf{V_{CC_MAX} - 1.005V}$

  $(V_{CC_MAX} - V_{OH_MAX}) = \mathbf{1.005}$

- For logic low, $V_{OUT} = V_{OL_MAX} = \mathbf{V_{CC_MAX} - 1.78V}$

  $(V_{CC_MAX} - V_{OL_MAX}) = \mathbf{1.78V}$

Pd_H is power dissipation when the output drives high.
Pd_L is the power dissipation when the output drives low.

$Pd_H = [(V_{OH_MAX} – (V_{CC_MAX} - 2V))/R_L] * (V_{CC_MAX} - V_{OH_MAX}) = [(2V - (V_{CC_MAX} - V_{OH_MAX}))/R_L] * (V_{CC_MAX} - V_{OH_MAX}) =$
$[(2V - 1.005V)/50\Omega] * 1.005V =$ **20mW**

$Pd_L = [(V_{OL_MAX} – (V_{CC_MAX} - 2V))/R_L] * (V_{CC_MAX} - V_{OL_MAX}) = [(2V - (V_{CC_MAX} - V_{OL_MAX}))/R_L] * (V_{CC_MAX} - V_{OL_MAX}) =$
$[(2V - 1.78V)/50\Omega] * 1.78V =$ **7.83mW**

Total Power Dissipation per output pair = Pd_H + Pd_L = **27.83mW**

RELIABILITY INFORMATION

TABLE 7. θ_{JA} VS. AIR FLOW TABLE FOR 16 LEAD VFQFN

θ_{JA} by Velocity (Linear Feet per Minute)	
	0
Multi-Layer PCB, JEDEC Standard Test Boards	51.5°C/W

TRANSISTOR COUNT

The transistor count for ICS85354 is: 210

PACKAGE OUTLINE - K SUFFIX FOR 16 LEAD VFQFN

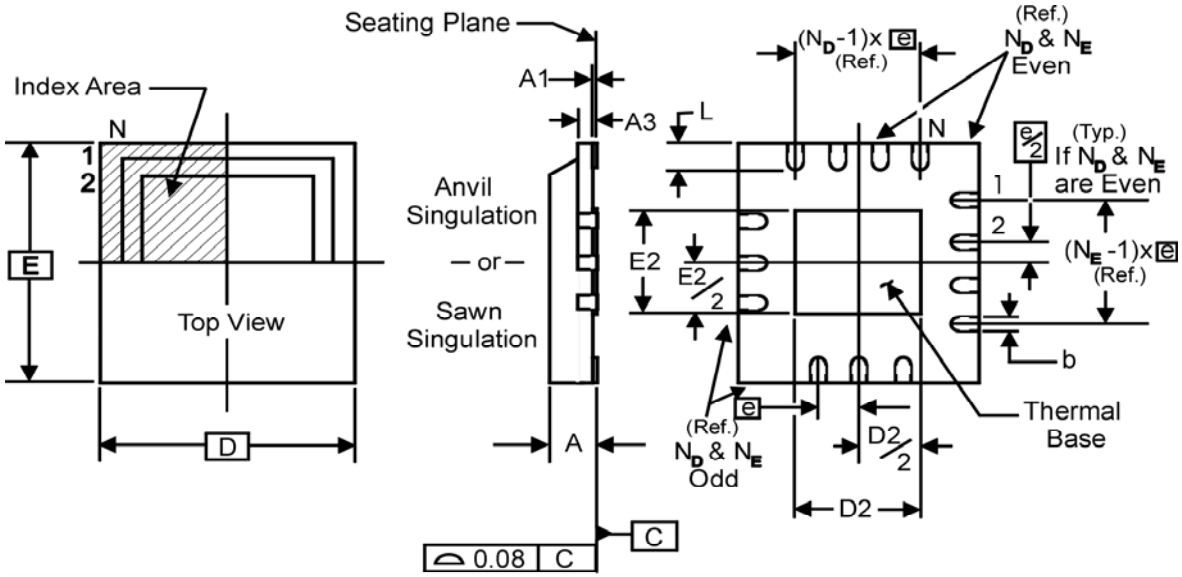

TABLE 8. PACKAGE DIMENSIONS

JEDEC VARIATION ALL DIMENSIONS IN MILLIMETERS		
SYMBOL	**MINIMUM**	**MAXIMUM**
N	16	
A	0.80	1.0
A1	0	0.05
A3	0.25 Reference	
b	0.18	0.30
e	0.50 BASIC	
N_D	4	
N_E	4	
D	3.0	
D2	0.25	1.25
E	3.0	
E2	0.25	1.25
L	0.30	0.50

Reference Document: JEDEC Publication 95, MO-220

TABLE 9. ORDERING INFORMATION

Part/Order Number	Marking	Package	Count	Temperature
ICS85354AK	354A	16 Lead VFQFN	120 per Tube	-40°C to 85°C
ICS85354AKT	354A	16 Lead VFQFN on Tape and Reel	3500	-40°C to 85°C

The aforementioned trademark, HiPerClockS™ is a trademark of Integrated Circuit Systems, Inc. or its subsidiaries in the United States and/or other countries.

While the information presented herein has been checked for both accuracy and reliability, Integrated Circuit Systems, Incorporated (ICS) assumes no responsibility for either its use or for infringement of any patents or other rights of third parties, which would result from its use. No other circuits, patents, or licenses are implied. This product is intended for use in normal commercial and industrial applications. Any other applications such as those requiring high reliability or other extraordinary environmental requirements are not recommended without additional processing by ICS. ICS reserves the right to change any circuitry or specifications without notice. ICS does not authorize or warrant any ICS product for use in life support devices or critical medical instruments.