Integrated Circuit Systems, Inc.

ICS8304

LOW SKEW, 1-TO-4 LVCMOS / LVTTL FANOUT BUFFER

GENERAL DESCRIPTION

The ICS8304 is a low skew, 1-to-4 Fanout Buffer and a member of the HiPerClockS™ family of High Performance Clock Solutions from ICS. The ICS8304 is characterized at full 3.3V for input V_{DD}, and mixed 3.3V and 2.5V for output operating supply modes (V_{DDO}). Guaranteed output and part-to-part skew characteristics make the ICS8304 ideal for those clock distribution applications demanding well defined performance and repeatability.

FEATURES

- 4 LVCMOS / LVTTL outputs
- LVCMOS / LVTTL clock input
- Maximum output frequency: 200MHz
- Output skew: 45ps (maximum at 3.3V supply)
- Part-to-part skew: 500ps (maximum)
- Small 8 lead SOIC package saves board space
- 3.3V input, outputs may be either 3.3V or 2.5V supply modes
- Lead-Free package available
- 0°C to 70°C ambient operating temperature

BLOCK DIAGRAM

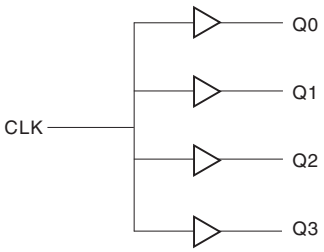

PIN ASSIGNMENT

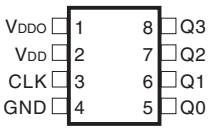

ICS8304
8-Lead SOIC, 150mil
3.9mm x 4.9mm, x 1.63mm package body
M Package
Top View

TABLE 1. PIN DESCRIPTIONS

Number	Name	Type		Description
1	V_{DDO}	Power		Output supply pin.
2	V_{DD}	Power		Core supply pin.
3	CLK	Input	Pulldown	LVCMOS / LVTTL clock input.
4	GND	Power		Power supply ground.
5	Q0	Output		Single clock output. LVCMOS / LVTTL interface levels.
6	Q1	Output		Single clock output. LVCMOS / LVTTL interface levels.
7	Q2	Output		Single clock output. LVCMOS / LVTTL interface levels.
8	Q3	Output		Single clock output. LVCMOS / LVTTL interface levels.

NOTE: *Pulldown* refers to internal input resistors. See Table 2, Pin Characteristics, for typical values.

TABLE 2. PIN CHARACTERISTICS

Symbol	Parameter	Test Conditions	Minimum	Typical	Maximum	Units
C_{IN}	Input Capacitance			4		pF
C_{PD}	Power Dissipation Capacitance (per output)	V_{DD}, V_{DDO} = 3.465V			15	pF
$R_{PULLDOWN}$	Input Pulldown Resistor			51		KΩ
R_{OUT}	Output Impedance		5	7	12	Ω

ABSOLUTE MAXIMUM RATINGS

Supply Voltage, V_{DD}	4.6V
Inputs, V_I	-0.5V to V_{DD} + 0.5 V
Outputs, V_O	-0.5V to V_{DDO} + 0.5V
Package Thermal Impedance, θ_{JA}	112.7°C/W (0 lfpm)
Storage Temperature, T_{STG}	-65°C to 150°C

NOTE: Stresses beyond those listed under Absolute Maximum Ratings may cause permanent damage to the device. These ratings are stress specifications only. Functional operation of product at these conditions or any conditions beyond those listed in the *DC Characteristics* or *AC Characteristics* is not implied. Exposure to absolute maximum rating conditions for extended periods may affect product reliability.

TABLE 3A. POWER SUPPLY DC CHARACTERISTICS, $V_{DD} = V_{DDO} = 3.3V \pm 5\%$, T_A = 0°C TO 70°C

Symbol	Parameter	Test Conditions	Minimum	Typical	Maximum	Units
V_{DD}	Core Supply Voltage		3.135	3.3	3.465	V
V_{DDO}	Output Supply Voltage		3.135	3.3	3.465	V
I_{DD}	Power Supply Current				15	mA
I_{DDO}	Output Supply Current				8	mA

TABLE 3B. LVCMOS / LVTTL DC CHARACTERISTICS, $V_{DD} = V_{DDO} = 3.3V \pm 5\%$, T_A = 0°C TO 70°C

Symbol	Parameter	Test Conditions	Minimum	Typical	Maximum	Units
V_{IH}	Input High Voltage		2		V_{DD} + 0.3	V
V_{IL}	Input Low Voltage		-0.3		1.3	V
I_{IH}	Input High Current	$V_{DD} = V_{IN} = 3.465V$			150	µA
I_{IL}	Input Low Current	$V_{DD} = 3.465V$, $V_{IN} = 0V$	-5			µA
V_{OH}	Output High Voltage	Refer to NOTE 1	2.6			V
		I_{OH} = -16mA	2.9			V
		I_{OH} = -100uA	3			V
V_{OL}	Output Low Voltage	Refer to NOTE 1			0.5	V
		I_{OL} = 16mA			0.25	V
		I_{OL} = 100uA			0.15	V

NOTE 1: Outputs terminated with 50Ω to $V_{DDO}/2$. See Parameter Measurement Section, "3.3V Output Load Test Circuit".

TABLE 3C. POWER SUPPLY DC CHARACTERISTICS, $V_{DD} = 3.3V \pm 5\%$, $V_{DDO} = 2.5V \pm 5\%$, T_A = 0°C TO 70°C

Symbol	Parameter	Test Conditions	Minimum	Typical	Maximum	Units
V_{DD}	Core Supply Voltage		3.135	3.3	3.465	V
V_{DDO}	Output Supply Voltage		2.375	2.5	2.625	V
I_{DD}	Power Supply Current				15	mA
I_{DDO}	Output Supply Current				8	mA

TABLE 3D. LVCMOS / LVTTL DC CHARACTERISTICS, V_{DD} = 3.3V±5%, V_{DDO} = 2.5V±5%, T_A = 0°C TO 70°C

Symbol	Parameter	Test Conditions	Minimum	Typical	Maximum	Units
V_{IH}	Input High Voltage		2		V_{DD} + 0.3	V
V_{IL}	Input Low Voltage		-0.3		1.3	V
I_{IH}	Input High Current	V_{DD} = V_{IN} = 3.465V			150	µA
I_{IL}	Input Low Current	V_{DD} = 3.465V, V_{IN} = 0V	-5			µA
V_{OH}	Output High Voltage; NOTE 1		2.1			V
V_{OL}	Output Low Voltage; NOTE 1				0.5	V

NOTE 1: Outputs terminated with 50Ω to V_{DDO}/2. See Parameter Measurement Section, "3.3V/2.5V Output Load Test Circuit".

TABLE 4A. AC CHARACTERISTICS, V_{DD} = V_{DDO} = 3.3V±5%, T_A = 0°C TO 70°C

Symbol	Parameter	Test Conditions	Minimum	Typical	Maximum	Units
f_{MAX}	Maximum Output Frequency				200	MHz
tp_{LH}	Propagation Delay, Low-to-High; NOTE 1	*f* ≤ 166MHz	2.0		3.3	ns
		166MHz < f ≤ 189.5MHz	2.0		3.4	ns
*t*sk(o)	Output Skew; NOTE 2, 4	*f* = 133MHz			45	ps
*t*sk(pp)	Part-to-Part Skew; NOTE 3, 4				500	ps
t_R	Output Rise Time	30% to 70%	250		500	ps
t_F	Output Fall Time	30% to 70%	250		500	ps
odc	Output Duty Cycle	f ≤ 189.5MHz	40		60	%

All parameters measured at f_{MAX} unless noted otherwise.
NOTE 1: Measured from V_{DD}/2 of the input to V_{DDO}/2 of the output.
NOTE 2: Defined as skew between outputs at the same supply voltage and with equal load conditions. Measured at V_{DDO}/2.
NOTE 3: Defined as skew between outputs on different devices operating at the same supply voltages and with equal load conditions. Using the same type of inputs on each device, the outputs are measured at V_{DDO}/2.
NOTE 4: This parameter is defined in accordance with JEDEC Standard 65.

TABLE 4B. AC CHARACTERISTICS, V_{DD} = 3.3V±5%, V_{DDO} = 2.5V±5%, T_A = 0°C TO 70°C

Symbol	Parameter	Test Conditions	Minimum	Typical	Maximum	Units
f_{MAX}	Maximum Output Frequency				189.5	MHz
tp_{LH}	Propagation Delay, Low-to-High; NOTE 1	*f* ≤ 166MHz	2.3		3.7	ns
		166MHz < f ≤ 189.5MHz	2.15		3.55	ns
*t*sk(o)	Output Skew; NOTE 2, 4	*f* = 133MHz			60	ps
*t*sk(pp)	Part-to-Part Skew; NOTE 3, 4				500	ps
t_R	Output Rise Time	30% to 70%	250		500	ps
t_F	Output Fall Time	30% to 70%	250		500	ps
odc	Output Duty Cycle	f ≤ 189.5MHz	40		60	%

All parameters measured at f_{MAX} unless noted otherwise.
NOTE 1: Measured from V_{DD}/2 of the input to V_{DDO}/2 of the output.
NOTE 2: Defined as skew between outputs at the same supply voltage and with equal load conditions. Measured at V_{DDO}/2.
NOTE 3: Defined as skew between outputs on different devices operating at the same supply voltages and with equal load conditions. Using the same type of inputs on each device, the outputs are measured at V_{DDO}/2.
NOTE 4: This parameter is defined in accordance with JEDEC Standard 65.

PARAMETER MEASUREMENT INFORMATION

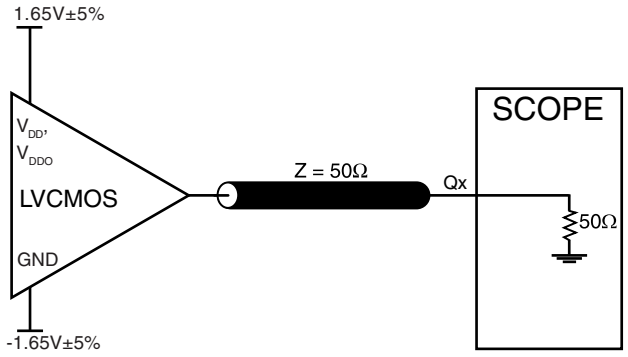

3.3V OUTPUT LOAD AC TEST CIRCUIT

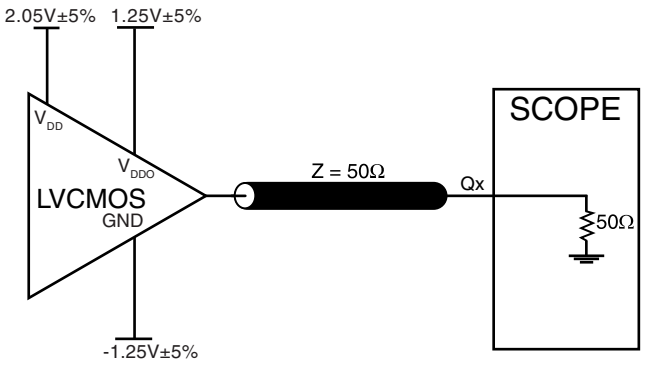

2.5V OUTPUT LOAD AC TEST CIRCUIT

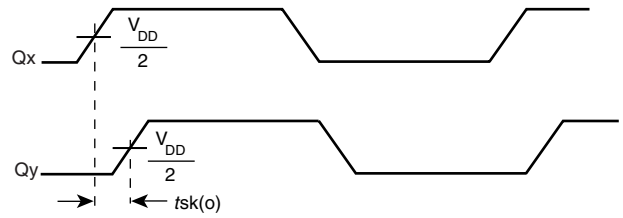

OUTPUT SKEW

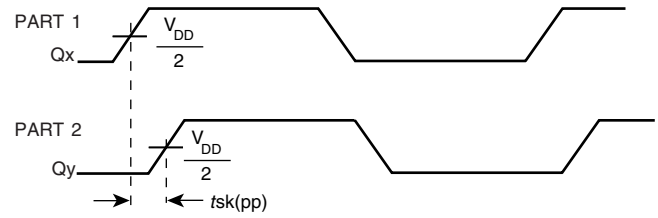

PART-TO-PART SKEW

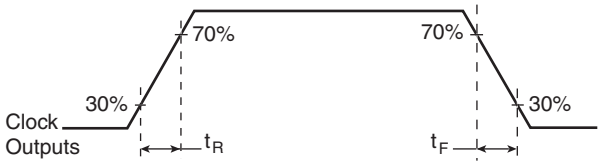

OUTPUT RISE/FALL TIME

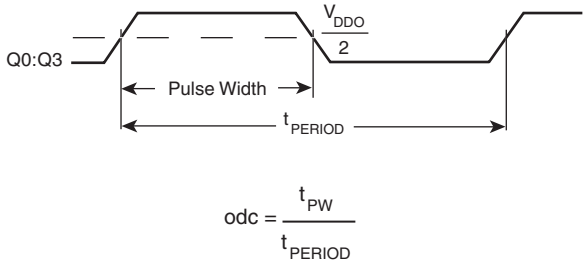

OUTPUT DUTY CYCLE/PULSE WIDTH/PERIOD

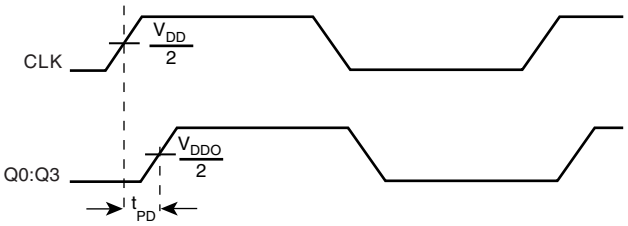

PROPAGATION DELAY

RELIABILITY INFORMATION

TABLE 5. θ_{JA} VS. AIR FLOW TABLE FOR 8 LEAD SOIC

θ_{JA} by Velocity (Linear Feet per Minute)			
	0	**200**	**500**
Single-Layer PCB, JEDEC Standard Test Boards	153.3°C/W	128.5°C/W	115.5°C/W
Multi-Layer PCB, JEDEC Standard Test Boards	112.7°C/W	103.3°C/W	97.1°C/W

NOTE: Most modern PCB designs use multi-layered boards. The data in the second row pertains to most designs.

TRANSISTOR COUNT

The transistor count for ICS8304 is: 416

PACKAGE OUTLINE - SUFFIX M FOR 8 LEAD SOIC

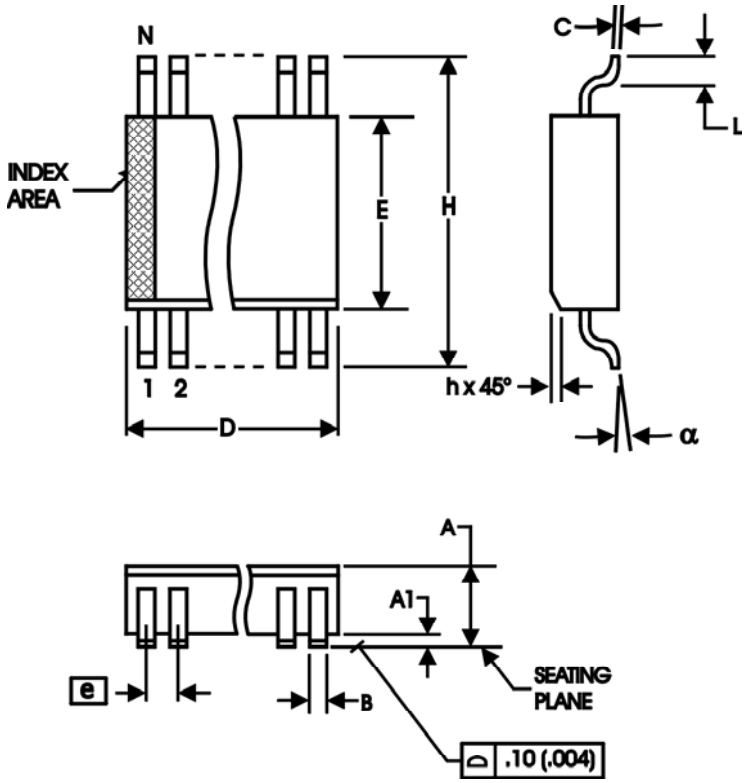

TABLE 6. PACKAGE DIMENSIONS - SUFFIX M

SYMBOL	Millimeters	
	MINIMUN	MAXIMUM
N	8	
A	1.35	1.75
A1	0.10	0.25
B	0.33	0.51
C	0.19	0.25
D	4.80	5.00
E	3.80	4.00
e	1.27 BASIC	
H	5.80	6.20
h	0.25	0.50
L	0.40	1.27
α	0°	8°

Reference Document: JEDEC Publication 95, MS-012

TABLE 7. ORDERING INFORMATION

Part/Order Number	Marking	Package	Count	Temperature
ICS8304AM	8304AM	8 lead SOIC	96 per tube	0°C to 70°C
ICS8304AMT	8304AM	8 lead SOIC on Tape and Reel	2500	0°C to 70°C
ICS8304AMLN	8304AMLN	8 lead SOIC, "Lead Free/Annealed"	96 per tube	0°C to 70°C
ICS8304AMLNT	8304AMLN	8 lead SOIC, "Lead Free/Annealed" on Tape and Reel	2500	0°C to 70°C
ICS8304AMLF	8304AMLF	8 lead SOIC, "Lead Free"	96 per tube	0°C to 70°C
ICS8304AMLFT	8304AMLF	8 lead SOIC, "Lead Free" on Tape and Reel	2500	0°C to 70°C

The aforementioned trademark, HiPerClockS™ is a trademark of Integrated Circuit Systems, Inc. or its subsidiaries in the United States and/or other countries.

While the information presented herein has been checked for both accuracy and reliability, Integrated Circuit Systems, Incorporated (ICS) assumes no responsibility for either its use or for infringement of any patents or other rights of third parties, which would result from its use. No other circuits, patents, or licenses are implied. This product is intended for use in normal commercial applications. Any other applications such as those requiring extended temperature range, high reliability, or other extraordinary environmental requirements are not recommended without additional processing by ICS. ICS reserves the right to change any circuitry or specifications without notice. ICS does not authorize or warrant any ICS product for use in life support devices or critical medical instruments.

REVISION HISTORY SHEET

Rev	Table	Page	Description of Change	Date
B	T4A	3	• Revised tp_{LH} (Propagation Delay) row from 2.3 Min. to 2 Min. • Deleted tp_{HL} row. • Revised tsk(o) (Output Skew) row from 35 Max. to 80 Max. • Revised tsk(pp) (Part-to-Part Skew) row from 200 Max. to 500 Max. • General note changed from "...measured at 166MHz..." to " ...measured at 150MHz..."	12/4/01
	T4B	4	• Revised tp_{LH} (Propagation Delay) row from 2.6 Min. to 2.3 Min. • Deleted tp_{HL} row. • Revised tsk(o) (Output Skew) row from 35 Max. to 85 Max. • Revised tsk(pp) (Part-to-Part Skew) row from 200 Max. to 500 Max. • General note changed from "...measured at 166MHz..." to " ...measured at 150MHz..."	
C	T4A	3	• In AC table, revised tsk(o) row from 80ps Max. to 45ps Max. Added f = 133MHz in Test Conditions column. • In odc row, deleted test conditions. • In notes, changed 150MHz to $f_{MAX.}$	12/11/01
	T4B	4	• In AC table, revised tsk(o) row from 80ps Max. to 60ps Max. Added f = 133MHz in Test Conditions column. • In odc row, deleted test conditions • In notes, changed 150MHz to $f_{MAX.}$	
C	T7	10	In the Ordering Information table, Marking column, revised marking to read 8304AM from ICS8304AM.	3/11/02
D	T3B	3	LVCMOS/LVTTL DC Characteristics Table, added I_{OH} and I_{OL} Test Conditions to V_{OH} and V_{OL} rows.	4/4/02
E		1	• Pin Assignment - adjusted dimensions.	4/13/04
	T1	2	• Pin Descriptions - changed V_{DD} description to Core supply pin.	
	T2	2	• Pin Characteristics - changed C_{IN} max 4pF to typical 4pF. Deleted R_{PULLUP} row. Added 5Ω min. and 12Ω max. to R_{OUT}.	
	T3A & T3C	3 & 4	• Power Supply tables - changed V_{DD} parameter from Power to Core.	
	T7	8	• Ordering Information table - added "Lead Free/Annealed" marking. Updated format throughout the data sheet.	
F		1	Featues section, changed Maximum output frequency bullet from 166MHz to 200MHz.	6/1/04
	T4A	4	3.3V AC Table - changed 166MHz max. to 200MHz max. Added another line for Propagation Delay. Changed test conditions in Output Duty Cycle from 166MHz to 189.5MHz.	
	T4B	4	3.3V AC Table - changed 166MHz max. to 189.5MHz max. Added another line for Propagation Delay. Changed test conditions in Output Duty Cycle from 166MHz to 189.5MH	
F	T7	8	• Ordering Information table - added "Lead Free" marking.	9/13/04