Description

The ICS660 provides clock generation and conversion for clock rates commonly needed in digital video equipment, including rates for MPEG, NTSC, PAL, and HDTV. The ICS660 uses the latest PLL technology to provide excellent phase noise and long term jitter performance for superior synchronization and S/N ratio.

For audio sampling clocks generated from 27 MHz, use the ICS661.

Please contact ICS if you have a requirement for an input and output frequency not included here - we can rapidly modify this product to meet special requirements.

Features

- Packaged in 16-pin TSSOP
- Available in Pb-free packaging
- Clock or crystal input
- Low phase noise
- Low jitter
- Exact (0 ppm) multiplication ratios
- Power-down control
- Reference clock output available

Block Diagram

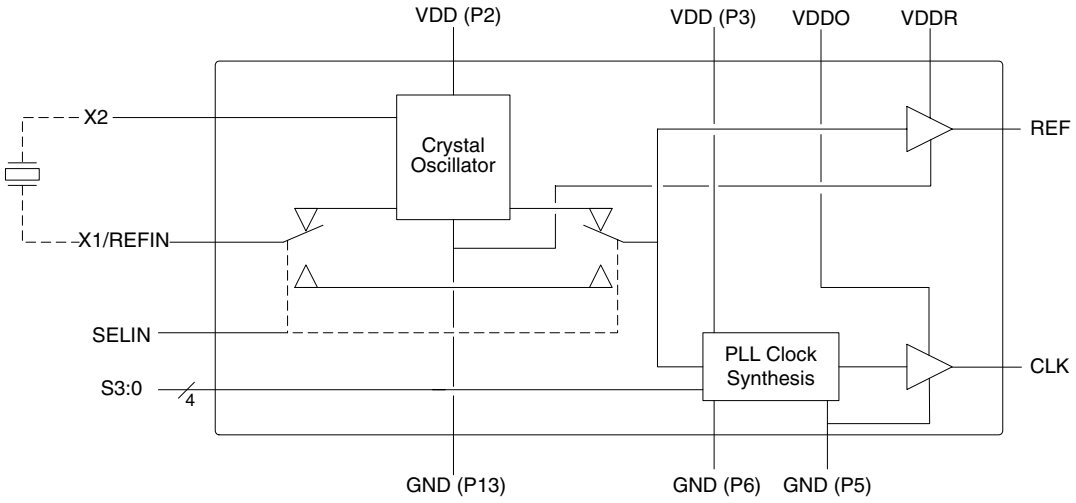

Integrated Circuit Systems, Inc. • 525 Race Street, San Jose, CA 95126 • tel (408) 297-1201 • www.icst.com

Pin Assignment

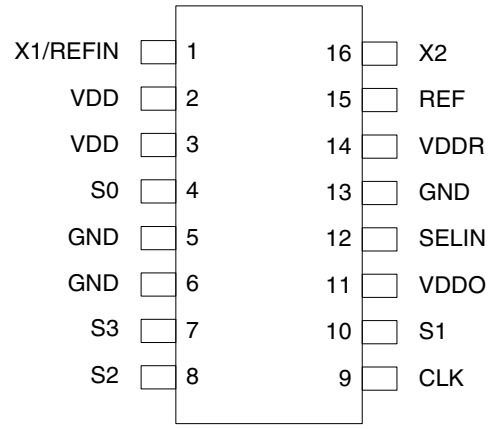

16-pin 4.40 mil body, 0.65 mm pitch TSSOP

Output Clock Selection Table

S3	S2	S1	S0	Input Frequency (MHz)	Output Frequency (MHz)
0	0	0	0	13.5	74.25
0	0	0	1	13.5	74.$\overline{175824}$
0	0	1	0	27	74.25
0	0	1	1	27	74.$\overline{175824}$
0	1	0	0	Pass thru	Input Freq
0	1	0	1	74.25	74.$\overline{175824}$
0	1	1	0	74.$\overline{175824}$	74.25
0	1	1	1	Power down	
1	0	0	0	16.9344	27
1	0	0	1	125	106.25
1	0	1	0	14.3181$\overline{818}$	27
1	0	1	1	106.25	125
1	1	0	0	27.027	27
1	1	0	1	27	27.027
1	1	1	0	27	14.3181$\overline{818}$
1	1	1	1	27	17.73447205[1]

[1] - 0.16 ppm compared to PAL specification

Pin Descriptions

Pin Number	Pin Name	Pin Type	Pin Description
1	X1/REFIN	Input	Connect this pin to a crystal or clock input
2	VDD	Power	Power supply for crystal oscillator.
3	VDD	Power	Power supply for PLL.
4	S0	Input	Output frequency selection. Determines output frequency per table above. On chip pull-up.
5	GND	Power	Ground for output stage.
6	GND	Power	Ground for PLL.
7	S3	Input	Output frequency selection. Determines output frequency per table above. On chip pull-up.
8	S2	Input	Output frequency selection. Determines output frequency per table above. On chip pull-up.
9	CLK	Output	Clock output.
10	S1	Input	Output frequency selection. Determines output frequency per table above. On chip pull-up.
11	VDDO	Power	Power supply for output stage.
12	SEL	Input	Low for clock input, high for crystal. On chip pull-up.
13	GND	Power	Connect to ground.
14	VDDR	Power	Power supply for reference output. Ground to turn off REF.
15	REF	Output	Reference clock output.
16	X2	Input	Connect this pin to a crystal. Leave open if using a clock input.

Integrated Circuit Systems, Inc. ● 525 Race Street, San Jose, CA 95126 ● tel (408) 297-1201 ● www.icst.com

Application Information

Series Termination Resistor

Clock output traces should use series termination. To series terminate a 50Ω trace (a commonly used trace impedance), place a 33Ω resistor in series with the clock line, as close to the clock output pin as possible. The nominal impedance of the clock output is 20Ω.

Decoupling Capacitors

As with any high-performance mixed-signal IC, the ICS660 must be isolated from system power supply noise to perform optimally.

Decoupling capacitors of 0.01µF must be connected between each VDD and the PCB ground plane. To further guard against interfering system supply noise, the ICS660 should use one common connection to the PCB power plane as shown in the diagram on the next page. The ferrite bead and bulk capacitor help reduce lower frequency noise in the supply that can lead to output clock phase modulation.

Recommended Power Supply Connection for Optimal Device Performance

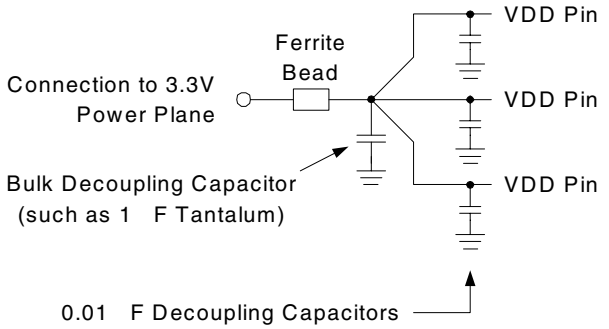

All power supply pins must be connected to the same voltage, except VDDR and VDDO, which may be connected to a lower voltage in order to change the output level. If the reference output is not used, ground VDDR.

Crystal Load Capacitors

If a crystal is used, the device crystal connections should include pads for capacitors from X1 to ground and from X2 to ground. These capacitors are used to adjust the stray capacitance of the board to match the nominally required crystal load capacitance. To reduce possible noise pickup, use very short PCB traces (and no vias) been the crystal and device.

The value of the load capacitors can be roughly determined by the formula $C = 2(C_L - 6)$ where C is the load capacitor connected to X1 and X2, and C_L is the specified value of the load capacitance for the crystal. A typical crystal C_L is 18 pF, so $C = 2(18 - 6) = 24$ pF. Because these capacitors adjust the stray capacitance of the PCB, check the output frequency using your final layout to see if the value of C should be changed.

PCB Layout Recommendations

For optimum device performance and lowest output phase noise, the following guidelines should be observed.

1) Each 0.01µF decoupling capacitor should be mounted on the component side of the board as close to the VDD pin as possible. No vias should be used between decoupling capacitor and VDD pin. The PCB trace to VDD pin should be kept as short as possible, as should the PCB trace to the ground via. Distance of the ferrite bead and bulk decoupling from the device is less critical.

2) The external crystal should be mounted next to the device with short traces. The X1 and X2 traces should not be routed next to each other with minimum spaces, instead they should be separated and away from other traces.

3) To minimize EMI, and obtain the best signal integrity, the 33Ω series termination resistor should be placed close to the clock output.

4) An optimum layout is one with all components on the same side of the board, minimizing vias through other signal layers (the ferrite bead and bulk decoupling capacitor can be mounted on the back). Other signal traces should be routed away from the ICS660. This includes signal traces just underneath the device, or on layers adjacent to the ground plane layer used by the device.

Integrated Circuit Systems, Inc. ● 525 Race Street, San Jose, CA 95126 ● tel (408) 297-1201 ● www.icst.com

Absolute Maximum Ratings

Stresses above the ratings listed below can cause permanent damage to the ICS660. These ratings, which are standard values for ICS commercially rated parts, are stress ratings only. Functional operation of the device at these or any other conditions above those indicated in the operational sections of the specifications is not implied. Exposure to absolute maximum rating conditions for extended periods can affect product reliability. Electrical parameters are guaranteed only over the recommended operating temperature range.

Item	Rating
Supply Voltage, VDD	5.5 V
All Inputs and Outputs	-0.5 V to VDD+0.5 V
Ambient Operating Temperature	-40 to +85° C
Storage Temperature	-65 to +150° C
Junction Temperature	125° C
Soldering Temperature	260° C

Recommended Operation Conditions

Parameter	Min.	Typ.	Max.	Units
Ambient Operating Temperature	-40		+85	°C
Power Supply Voltage (measured in respect to GND)	+3.0		+3.6	V

DC Electrical Characteristics

Unless stated otherwise, **VDD = 3.3 V ±10%**, Ambient Temperature -40 to +85° C

Parameter	Symbol	Conditions	Min.	Typ.	Max.	Units
Operating Voltage	VDD		3.0		3.6	V
	VDDO		2.5		VDD	V
	VDDR		2.5		VDD	V
Supply Current	IDD	No Load		25		mA
Standby Supply Current	IDDPD			75		µA
Input High Voltage	V_{IH}		2			V
Input Low Voltage	V_{IL}				0.8	V
Output High Voltage	V_{OH}	I_{OH} = -4 mA	VDD-0.4			V
Output High Voltage	V_{OH}	I_{OH} = -20 mA	2.4			V
Output Low Voltage	V_{OL}	I_{OL} = 20 mA			0.4	V
Short Circuit Current	I_{OS}	Each output		±65		mA
Nominal Output Impedance	Z_{OUT}			20		Ω
Input Capacitance	C_{IN}	input pins		7		pF
Internal Pull-up Resistor	R_{PU}			120		kΩ

Integrated Circuit Systems, Inc. ● 525 Race Street, San Jose, CA 95126 ● tel (408) 297-1201 ● www.icst.com

AC Electrical Characteristics

Unless stated otherwise, **VDD = 3.3 V ±10%**, Ambient Temperature -40 to +85° C

Parameter	Symbol	Conditions	Min.	Typ.	Max.	Units
Crystal Frequency					28	MHz
Output Clock Rise Time	t_{OR}	20% to 80%, 15 pF load			1.5	ns
Output Clock Fall Time	t_{OF}	80% to 20%, 15 pF load			1.5	ns
Output Duty Cycle	t_{OD}	at VDD/2, 15 pF load	40	49 to 51	60	%
Power up time	t_{PU}	inputs out of PD state to clocks stable			10	ms
Power down time	t_{PD}	inputs in PD state to clocks off			1	µs
Jitter, short term		Reference clock off		100		ps p-p
Jitter, short term		Reference clock on		125		ps p-p
Jitter, long term		Reference clock off; 10 us delay		300		ps p-p
Jitter, long term		Reference clock on; 10 us delay		300		ps p-p
Single sideband phase noise		Reference clock off; 10 kHz offset		-110		dBc
Single sideband phase noise		Reference clock on; 10 kHz offset		-110		dBc
Actual mean frequency error versus target		Note 1		0		ppm

Note 1: Selection 1111 is 0.16 ppm lower than the PAL specified frequency

Thermal Characteristics

Parameter	Symbol	Conditions	Min.	Typ.	Max.	Units
Thermal Resistance Junction to Ambient	θ_{JA}	Still air		78		°C/W
	θ_{JA}	1 m/s air flow		70		°C/W
	θ_{JA}	3 m/s air flow		68		°C/W
Thermal Resistance Junction to Case	θ_{JC}			37		°C/W

Integrated Circuit Systems, Inc. ● 525 Race Street, San Jose, CA 95126 ● tel (408) 297-1201 ● www.icst.com

Package Outline and Package Dimensions (16-pin TSSOP, 4.40 mm Body, 0.65 mm Pitch)

Package dimensions are kept current with JEDEC Publication No. 95, MO-153

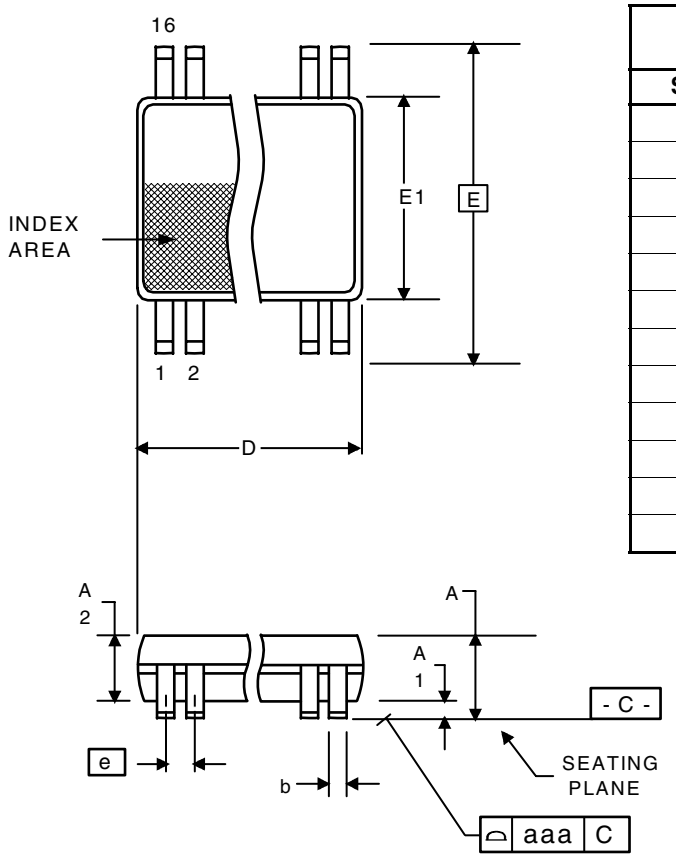

	Millimeters		Inches	
Symbol	**Min**	**Max**	**Min**	**Max**
A	--	1.20	--	0.047
A1	0.05	0.15	0.002	0.006
A2	0.80	1.05	0.032	0.041
b	0.19	0.30	0.007	0.012
C	0.09	0.20	0.0035	0.008
D	4.90	5.1	0.193	0.201
E	6.40 BASIC		0.252 BASIC	
E1	4.30	4.50	0.169	0.177
e	0.65 Basic		0.0256 Basic	
L	0.45	0.75	0.018	0.030
α	0°	8°	0°	8°
aaa	--	0.10	--	0.004

Ordering Information

Part / Order Number	Marking	Shipping packaging	Package	Temperature
ICS660GI	ICS660GI	Tubes	16-pin TSSOP	-40 to +85° C
ICS660GIT	ICS660GI	Tape and Reel	16-pin TSSOP	-40 to +85° C
ICS660GILF	660GILF	Tubes	16-pin TSSOP	-40 to +85° C
ICS660GILFT	660GILF	Tape and Reel	16-pin TSSOP	-40 to +85° C

While the information presented herein has been checked for both accuracy and reliability, Integrated Circuit Systems (ICS) assumes no responsibility for either its use or for the infringement of any patents or other rights of third parties, which would result from its use. No other circuits, patents, or licenses are implied. This product is intended for use in normal commercial applications. Any other applications such as those requiring extended temperature range, high reliability, or other extraordinary environmental requirements are not recommended without additional processing by ICS. ICS reserves the right to change any circuitry or specifications without notice. ICS does not authorize or warrant any ICS product for use in life support devices or critical medical instruments.

Integrated Circuit Systems, Inc. ● 525 Race Street, San Jose, CA 95126 ● tel (408) 297-1201 ● www.icst.com