ICPL0452 / ICPL0453 / ICPL0500 / ICPL0501

DESCRIPTION

The ICPL0452, ICPL0453, ICPL0500 and ICPL0501 devices each consist of an infrared emitting diode, optically coupled to a high speed photo detector transistor. A separate connection for the photodiode bias and output-transistor collector increase the speed by several orders of magnitude over conventional phototransistor couplers by reducing the base-collector capacitance of the input transistor.

These devices belong to Isocom Compact Range of optocouplers.

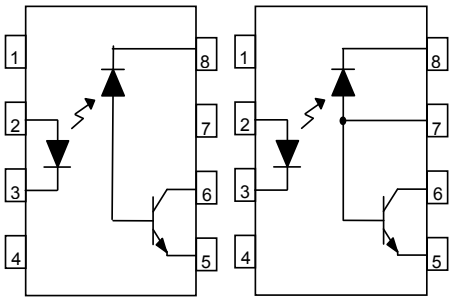

ICPL0452 / ICPL0453 ICPL0500 / ICPL0501

1. NC
2. Anode
3. Cathode
4. NC
5. Gnd
6. Vout
7. VB (ICPL0500/ ICPL0501) NC (ICPL0452/ ICPL0453)
8. V_{CC}

FEATURES

- Half Pitch 1.27mm
- High speed 1Mbit/s
- 15kV/µs min. Common Mode Transient Immunity
- (ICPL0453)
- High AC Isolation Voltage 3750V_{rms}
- Guaranteed Performance from 0°C to 70°C
- Wide Operating Temperature Range -55°C to 100°C
- Pb Free and RoHS Compliant
- Halogen Free
- Safety Approvals Pending

APPLICATIONS

- Line Receivers
- Telecommunication Equipments
- Power Transistor Isolation in Motor Drives
- Replacement of Low Speed Phototransistor Optocouplers
- Feedback Loop in Switch Mode Power Supplies
- High Speed Logic Ground Isolation
- Home Appliances

ORDER INFORMATION

- Add T&R after PN for Surface Mount Tape & Reel

ABSOLUTE MAXIMUM RATINGS (T_A = 25°C)

Input Diode

Forward Current	25mA
Peak Forward Current (50% duty cycle, 1ms pulse width)	50mA
Peak Transient Current (≤1µs pulse width, 300pps)	1A
Reverse Voltage	5V
Power dissipation	45mW

Output

Output Current	8mA
Peak Output Current	16mA
Emitter-Base Reverse Voltage (ICPL0500 and ICPL0501 only)	5V
Base Current (ICPL0500 and ICPL0501 only)	5mA
Output Voltage	-0.5 to 20V
Supply Voltage	-0.5 to 30V
Power Dissipation	100mW

Total Package

Isolation Voltage	3750V_{rms}
Operating Temperature	-55 to 100 °C
Storage Temperature	-55 to 125 °C
Lead Soldering Temperature (10s)	260°C

ISOCOM COMPONENTS 2004 LTD
Unit 25B, Park View Road West, Park View Industrial Estate
Hartlepool, Cleveland, TS25 1UD, United Kingdom
Tel: +44 (0)1429 863 609 Fax : +44 (0)1429 863 581
e-mail: sales@isocom.co.uk
http://www.isocom.com

ISOCOM COMPONENTS ASIA LTD
Hong Kong Office,
Block A, 8/F, Wah Hing Industrial mansion,
36 Tai Yau Street, San Po Kong, Kowloon, Hong Kong.
Tel: +852 2995 9217 Fax : +852 8161 6292
e-mail sales@isocom.com.hk

ELECTRICAL CHARACTERISTICS (T_A = 0°C to 70°C unless otherwise specified)

INPUT

Parameter	Symbol	Test Condition	Min	Typ.*	Max	Unit
Forward Voltage	V_F	I_F = 16mA		1.5	1.8	V
Reverse Voltage	V_R	I_R = 10µA	5.0			V
Temperature Coefficient of V_F	$\Delta V_F/\Delta T_A$	I_F = 16mA		-1.6		mV/°C

OUTPUT

Parameter	Symbol	Test Condition	Min	Typ.*	Max	Unit
Logic High Output Current	I_{OH}	I_F = 0mA, V_O = V_{CC} = 5.5V, T_A = 25°C		0.001	0.5	µA
		I_F = 0mA, V_O = V_{CC} = 15V, T_A = 25°C		0.01	1	
		I_F = 0mA, V_O = V_{CC} = 15V			50	
Logic Low Supply Current	I_{CCL}	I_F = 16mA, V_O = Open, V_{CC} = 15V		140	200	µA
Logic High Supply Current	I_{CCH}	I_F = 0mA, V_O = Open, V_{CC} = 15V, T_A = 25°C		0.01	1	µA
		I_F = 0mA, V_O = Open, V_{CC} = 15V			2	

* Typical values at T_A = 25°C

ELECTRICAL CHARACTERISTICS (T_A = 0°C to 70°C unless otherwise specified)

COUPLED

Parameter	Symbol	Test Condition	Min	Typ.*	Max	Unit
Current Transfer Ratio	CTR	ICPL0500 ICPL0452/ ICPL0453 / ICPL0501 I_F = 16mA, V_O = 0.4V V_{CC} = 4.5V, T_A = 25°C	7 19		50 50	%
		ICPL0500 ICPL0452/ ICPL0453 / ICPL0501 I_F = 16mA, V_O = 0.5V V_{CC} = 4.5V	5 15			
Logic Low Output Voltage	V_{OL}	ICPL0500 I_F = 16mA, I_O = 1.1mA, V_{CC} = 4.5V, T_A = 25°C		0.18	0.4	V
		ICPL0452/ ICPL0453 / ICPL0501 I_F = 16mA, I_O = 3mA, V_{CC} = 4.5V, T_A = 25°C		0.18	0.4	
		ICPL0500 I_F = 16mA, I_O = 0.8mA, V_{CC} = 4.5V			0.5	
		ICPL0452/ ICPL0453 / ICPL0501 I_F = 16mA, I_O = 2.4mA, V_{CC} = 4.5V			0.5	

* Typical values at T_A = 25°C

ELECTRICAL CHARACTERISTICS (T_A = 0°C to 70°C unless otherwise specified)

Switching Characteristics (T_A = 0°C to 70°C, I_F = 16mA, V_{CC} = 5V unless otherwise specified)

Parameter	Symbol	Test Condition	Min	Typ.*	Max	Unit
Propagation Delay Time to Logic Low	T_{PHL}	ICPL0500 R_L = 4.1kΩ, T_A = 25°C R_L = 4.1kΩ			 1.5 2.0	µs
		ICPL0452/ ICPL0453 / ICPL0501 R_L = 1.9kΩ, T_A = 25°C R_L = 1.9kΩ			 0.8 1.0	
Propagation Delay Time to Logic High	T_{PLH}	ICPL0500 R_L = 4.1kΩ, TA = 25°C R_L = 4.1kΩ			 1.5 2.0	µs
		ICPL0452/ ICPL0453 / ICPL0501 R_L = 1.9kΩ, T_A = 25°C R_L = 1.9kΩ			 0.8 1.0	
Common Mode Transient Immunity at Logic High	CM_H	ICPL0500 I_F = 0mA, V_{CM} = 10Vp-p, R_L = 4.1KΩ, T_A = 25°C		1000		V/µs
		ICPL0452/ ICPL0501 I_F = 0mA, V_{CM} = 10Vp-p, R_L = 1.9kΩ, T_A = 25°C		1000		
		ICPL0453 I_F = 0mA, V_{CM} = 1500Vp-p, R_L = 1.9kΩ, T_A = 25°C	15000			
Common Mode Transient Immunity at Logic Low	CM_L	ICPL0500 I_F = 16mA, V_{CM} = 10Vp-p, R_L = 4.1kΩ, T_A = 25°C		1000		V/µs
		ICPL0452/ ICPL0501 I_F = 16mA, V_{CM} = 10Vp-p, R_L = 1.9kΩ, T_A = 25°C		1000		
		ICPL0453 I_F = 16mA, V_{CM} = 1500Vp-p, R_L = 1.9kΩ, T_A = 25°C	15000			

* Typical values at T_A = 25°C

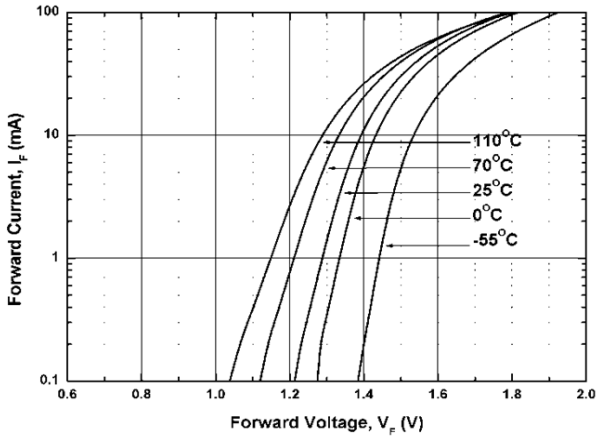

Fig 1 Forward Current vs Forward Voltage

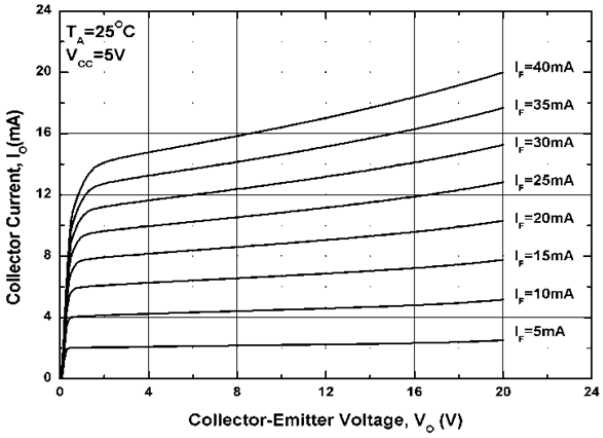

Fig 2 Output Current vs Output Voltage

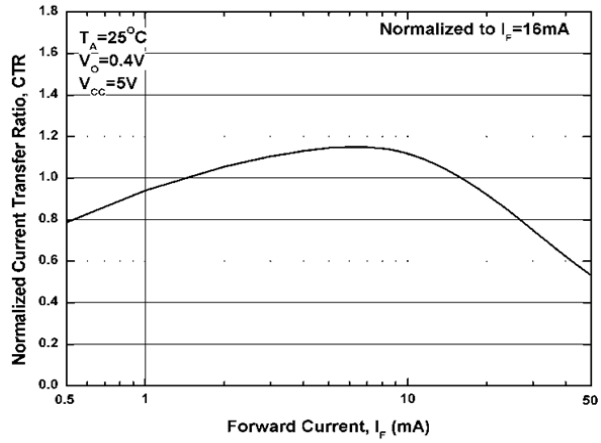

Fig 3 Normalized CTR vs Forward Current

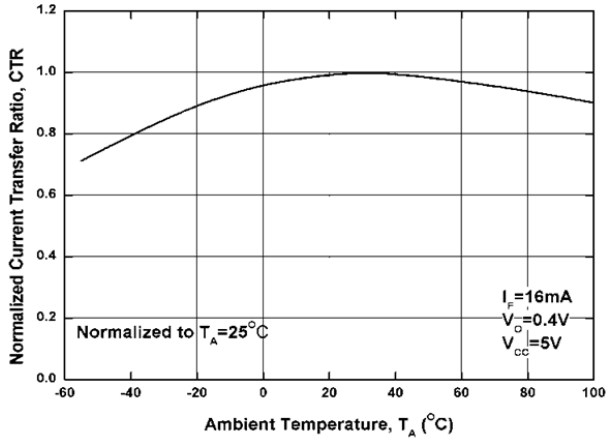

Fig 4 Normalized CTR vs T_A

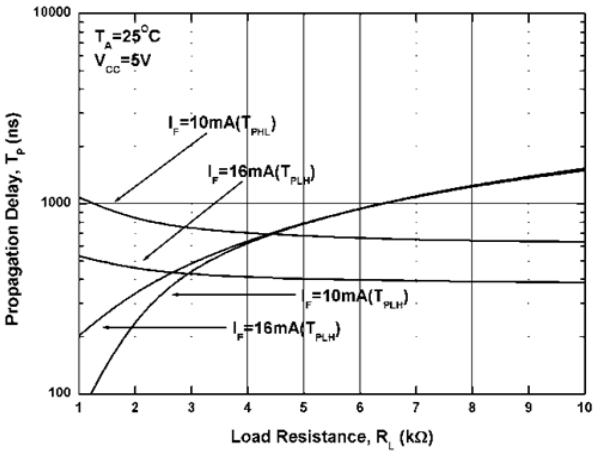

Fig 5 Propagation Delay vs Load Resistance

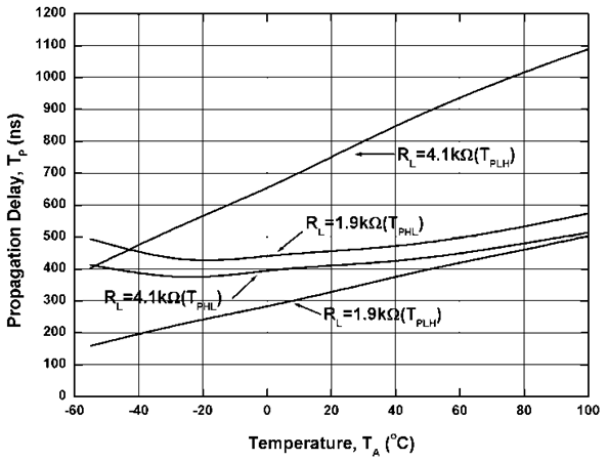

Fig 6 Propagation Delay vs T_A

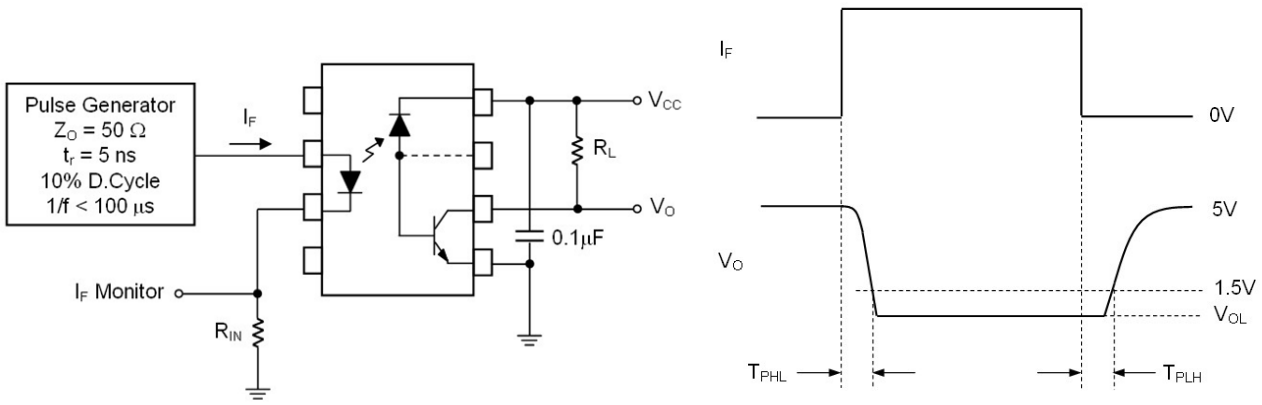

Fig 7 Switching Time Test Circuit

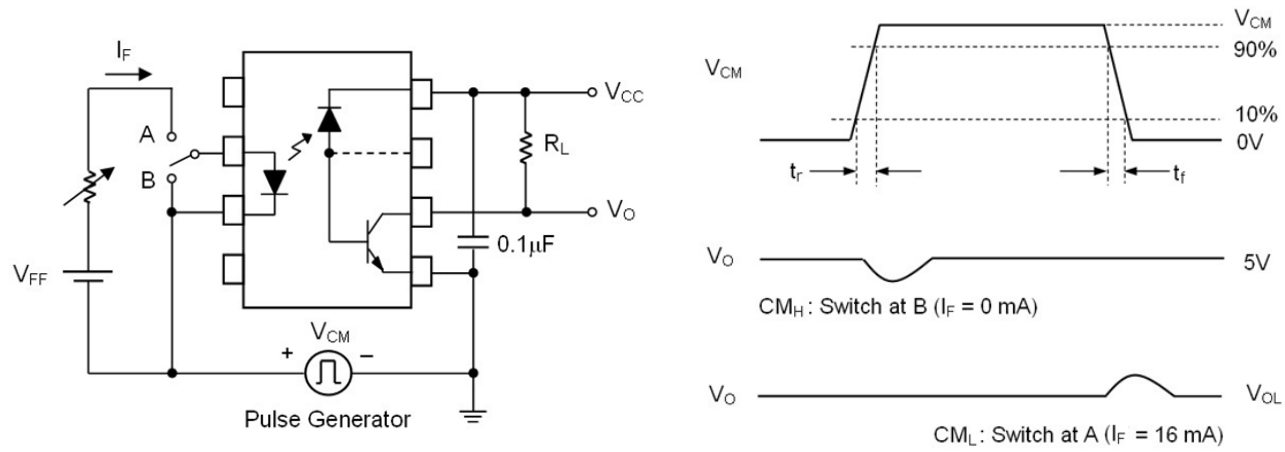

Fig 8 Common Mode Transient Immunity Test Circuit

Note:

Common mode transient immunity in logic high level is the maximum tolerable (positive) dV_{CM}/dt on the leading edge of the common mode pulse signal V_{CM}, to assure that the output will remain in a logic high state (i.e., $V_O > 2.0V$).

Common mode transient immunity in logic low level is the maximum tolerable (negative) dV_{CM}/dt on the trailing edge of the common mode pulse signal, V_{CM}, to assure that the output will remain in a logic low state (i.e., $V_O < 0.8V$).

ORDER INFORMATION

ICPL0452, ICPL0453, ICPL0500, ICPL0501

After PN	Description	Packing quantity
None	Surface Mount Tube Package	100 pcs per tube
T&R	Surface Mount Tape & Reel	2000 pcs per reel

PACKAGE DIMENSIONS (mm)

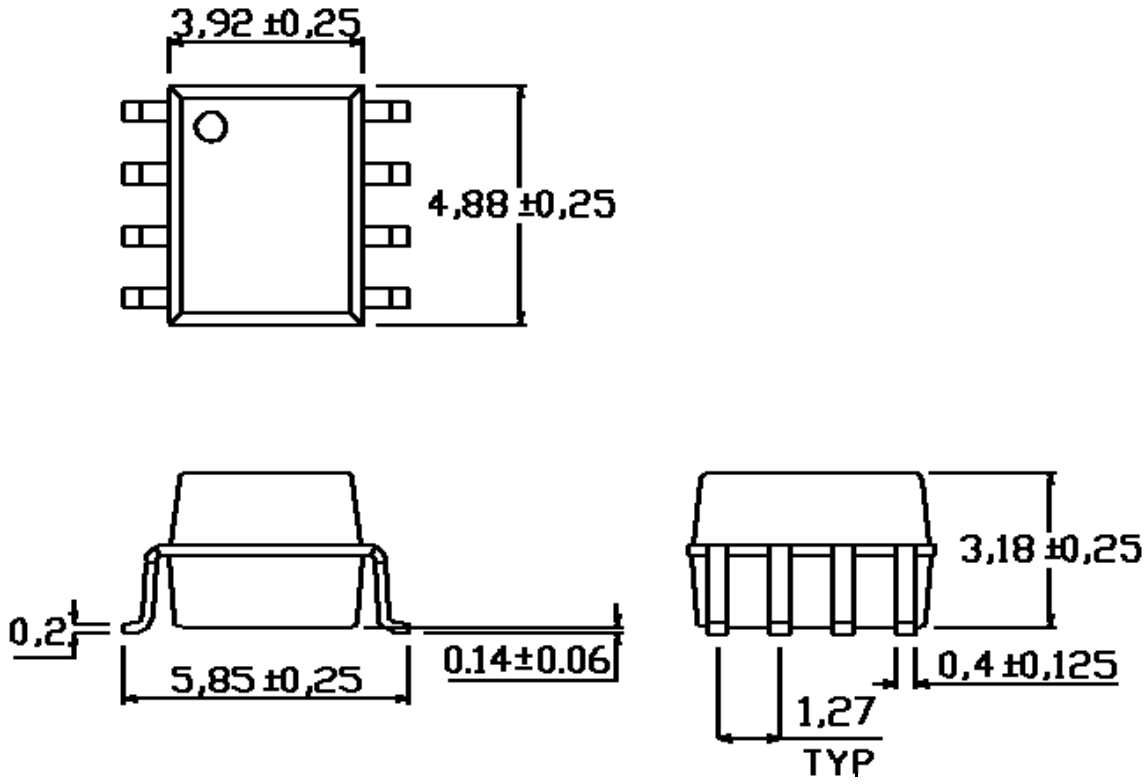

Recommended Pad Layout

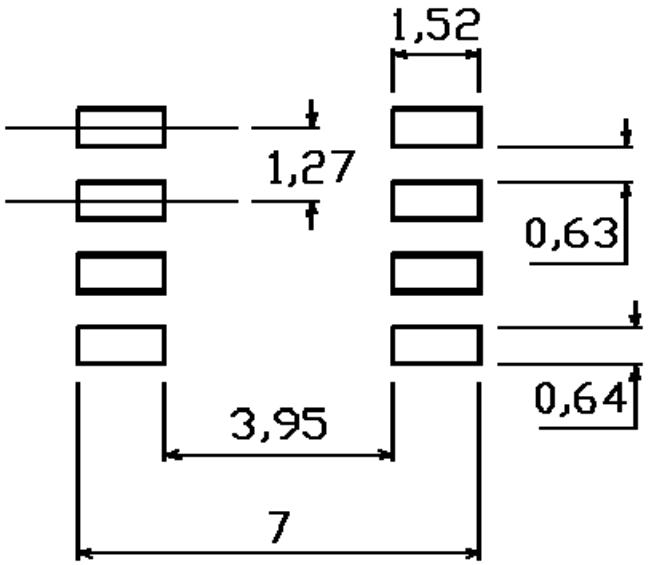

Device Marking (Example ICPL0452)

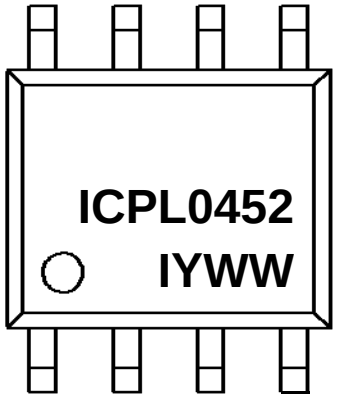

ICPL0452	denotes Device Part Number
Y	denotes 1 digit Year code
WW	denotes 2 digit Week code
I	denotes Isocom

REFLOW SOLDERING TEMPERATURE PROFILE

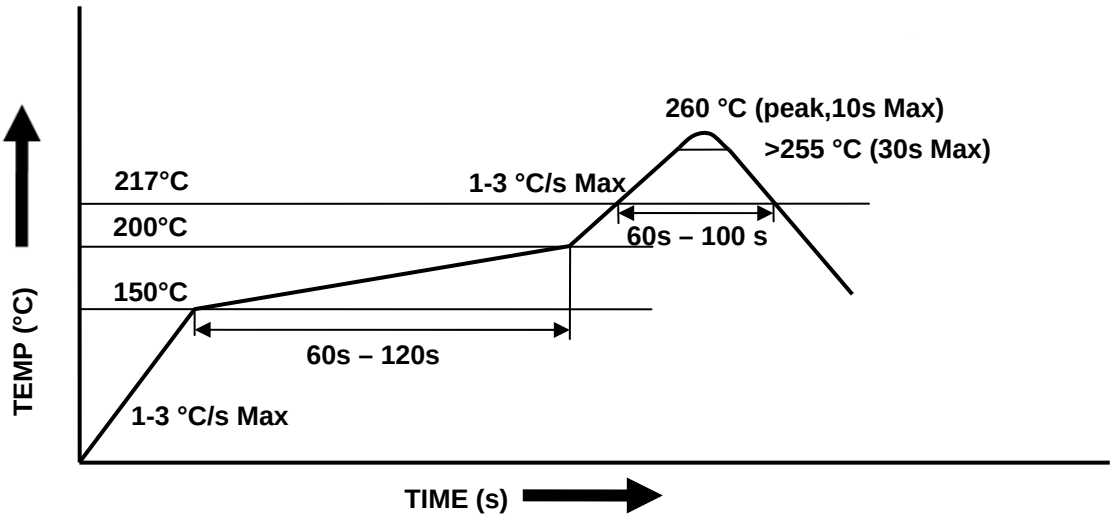

Tape and Reel Packaging

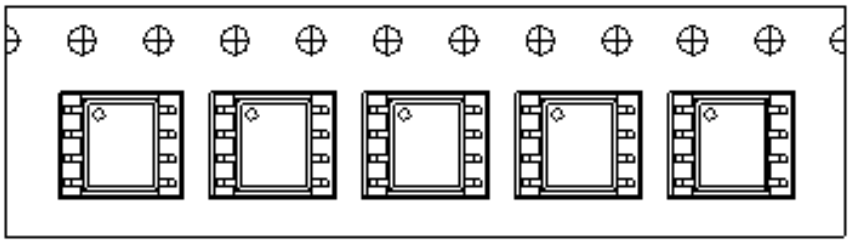

Direction of feed from reel

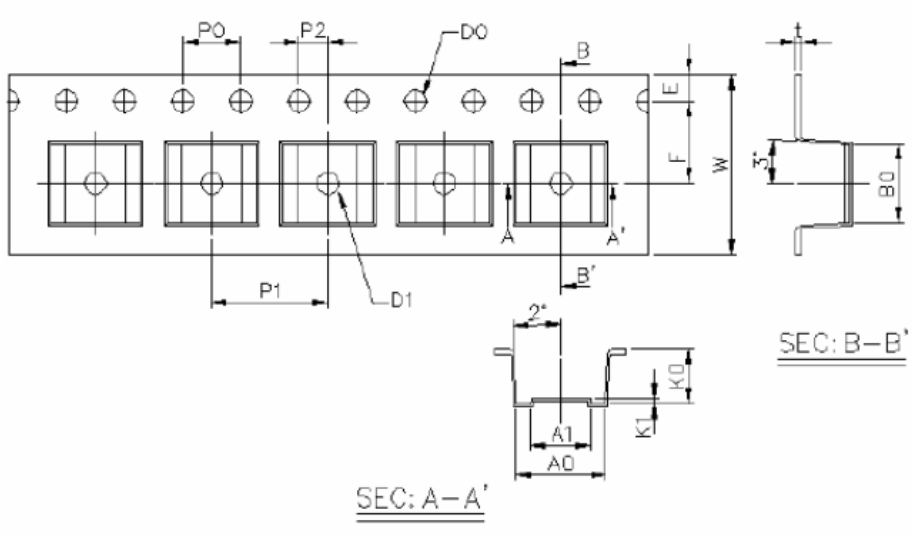

Dimension No.	**A0**	**A1**	**B0**	**D0**	**D1**	**E**	**F**
Dimension (mm)	6.2±0.1	4.1±0.1	5.28±0.1	1.5±0.1	1.5±0.3	1.75±0.1	5.5±0.1
Dimension No.	**Po**	**P1**	**P2**	**t**	**W**	**K0**	**K1**
Dimension (mm)	4.0±0.1	8.0±0.1	2.0±0.1	0.4±0.1	12.0 +0.3/-0.1	3.7±0.1	0.3±0.1