ICP2 - Portable

Production Quality In-Circuit Service Programmer

Softlog Systems

A member of the ICP family of high-speed, production-grade in-circuit programmers for Microchip microcontrollers, ICP2-Portable is specially designed to meet your service programming needs. This compact, battery-powered device supports up to six different programming environments, making it an ideal, low-cost solution for field upgrades.



- 6 environments with counter
- Fast programming
- Convenient and easy-to-operate
- Battery/USB/Adapter powered
- Low-cost device

Counter Maximizes Your Control

ICP2-Portable includes a configurable counter that ensures the number of programmed devices does not exceed a pre-defined value. The counter allows you to control the number of upgrades performed by your customer's service personnel. In cases where a higher level of security is needed, ICP2-Portable can be enhanced to offer multi-layer IP protection using our Secure Programming software.

Microchip-Oriented

Reflecting our focus and expertise in working with Microchip, ICP2-Portable is specifically designed for full compatibility with all Microchip microcontrollers and peripheral components. Softlog Systems is a recognized Microchip third-party tool provider since 1998.

Overcurrent Protection

Overcurrent protection circuits prevent both programmed devices and the programmer from being damaged in the event of a short-circuit or a connection to an incorrectly powered programmed device.

24x7 Support

We understand the importance of on-time field maintenance. Softlog's technical support engineers are available round-the-clock to provide you with immediate solutions to operational and maintenance issues which may arise.

www.softlog.com

ICP2 - Portable

Production Quality In-Circuit Service Programmer

High-Speed, Compact Programming Device

- Designed for in-circuit (ICSP™) programming of 8-bit PIC® MCUs, 16-bit PIC® MCUs & dsPIC® DSCs (optional), 32-bit PIC® MCUs (optional), Keeloq® encoders (optional) and serial EEPROMs
- On-board 4MB flash memory for non-volatile storage of 6 environments
- Three standalone serialization schemes:
  - Sequential, random and user file
  - 1 to 8 bytes, automatic "retlw"
- Vdd and Vpp overload protection
- Power supply: 3xAAA batteries, USB or power adapter
- Dimensions: 130 x 65 x 26mm

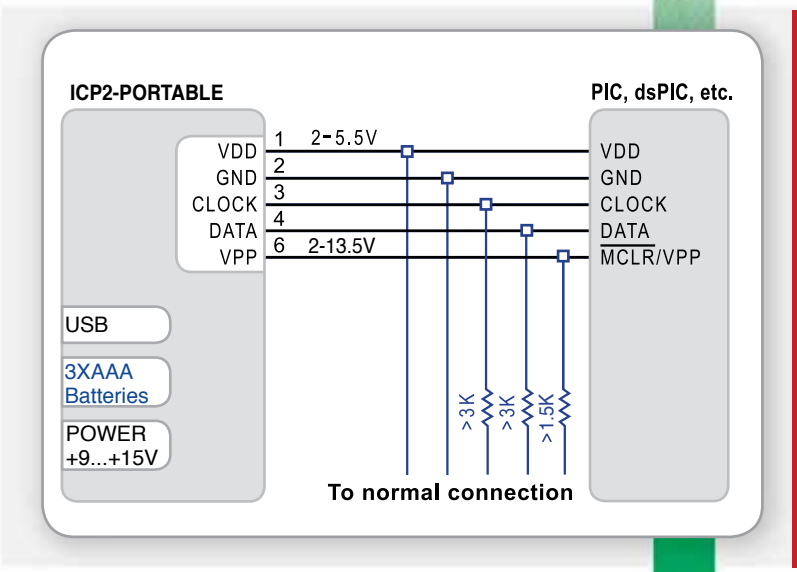

Typical in-circuit programming connection

Programmable Hardware

- Programmable Vdd (2.0 to 5.5V) and Vpp (2.0 to 13.5V)
- Programmable delay between Vdd and Vpp (0.1 to 250ms)
- Programmable clock/data speed (500KHz to 10MHz)
- Programmable Vdd source (programmer or target)
- Vdd current limit: 50mA
- Prevents damage to connected microcontroller in case of power ON and power OFF

Easy-to-Use Software

- Counter that limits the number of times a hex file can be programmed
- Standalone operation
- Field firmware upgrade (built-in bootloader)

Host System Requirements

- Windows®-95/98/2000/ME/XP/NT/Vista/7
- USB port

About Softlog Systems

Softlog Systems specializes in In-Circuit Serial Programming (ICSP™) for Microchip microcontrollers. Since 1998, our high-performance, cost-effective ICSP™ solutions have been used to manufacture millions of products worldwide. Leveraging our technical know-how and extensive field experience, Softlog Systems' ICP family of production-grade programmers reduce manufacturing costs and accelerate time-to-market.

Recognized Microchip Third-Party Tool Provider

Softlog Systems

Softlog Systems (2006) Ltd.

18 Rojansky St, P.O.Box 17007 Rishon-Letzion 75070 Israel
Tel: 972-3-9515359 Fax: 972-3-9527520
email: sales@softlog.com **www.softlog.com**