High Vibration
Type HZC_V -55 ºC to +125 ºC

SMT Hybrid Polymer-Aluminum Electrolytic Capacitors

For filtering, Bypassing and Power Supply Decoupling with Long Life Requirements

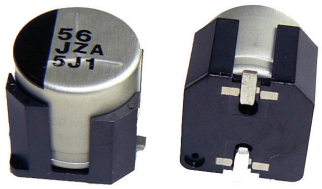

Using a ruggedized construction, type HZC_V withstands a 30 G vibration test. As the main countermeasure to vibration, the metal case is inserted into a molded plastic retaining wall that surrounds the part, keeping it firmly in place. Larger diameter leads provide additional mechanical stability of the internal winding and a larger soldering surface keeps the part firmly affixed to the PCB. Rated for 125°C, type HZC combines the advantages of aluminum electrolytic and aluminum polymer technology. These hybrid capacitors have the ultra-low ESR characteristics of conductive aluminum polymer capacitors packaged in a V-chip, SMT case with high capacitance and voltage ratings.

Highlights

- +125 °C, Up to 4,000 Hours Load Life
- Low Leakage Current
- Very Low ESR and High Ripple Current
- 260 °C reflow soldering

Specifications

Capacitance Range	33 to 330 µF
Capacitance Tolerance	±20% @ 120 Hz/+20 °C
Rated Voltage	25, 35, 50, 63 Vdc
Leakage Current (at 20°C)	I = .01CV or 3 µA max., whichever is greater after 2 minutes I = leakage current in µAmps C = rated capacitance in µF V = rated DC Working voltage in Volts
Low Temperature Characteristics (at 120 Hz)	Z(-25 ºC)/Z(+20 ºC): 2 Z(-55 ºC)/Z(+20 ºC): 2.5
Ripple Current Frequency Multiplier	See table below
RoHS Compliant	

Frequency	120 Hz	1000 Hz	10,000 Hz	100 KHz
Correction Factor	0.1	0.3	0.6	1

Outline Drawing

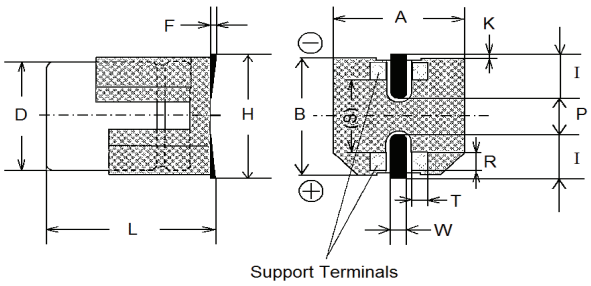

mm

Size Code	D ± 0.5	L ± 0.3	A ± 0.2	B ± 0.2	H max.	F	I (ref.)	W ± 0.2	P (ref.)	K ± 0.2	R ± 0.2	S ± 0.2	T ± 0.2
F	8	10.5	8.3	8.3	10	-1 to +0.15	3.4	1.2	3.1	0.70	0.70	5.3	1.3
G	10	10.5	10.3	10.3	12	-1 to +0.15	3.5	1.2	4.6	0.70	0.70	6.9	1.3

Capacitor Markings

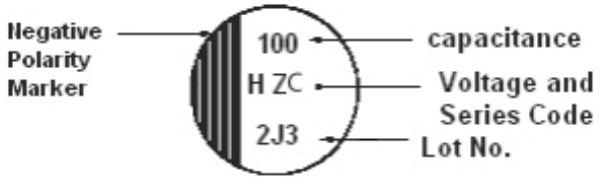

Lot, Number: Year, Line, Month

Voltage Code	Voltage Vdc
E	25
V	35
H	50
J	63

High Vibration
Type HZC_V -55 ºC to +125 ºC

SMT Hybrid Polymer-Aluminum Electrolytic Capacitors

Part Numbering System

HZC	227	M	025	F	24VT	–F
Type	Capacitance	Capacitance Tolerance	Voltage Code	Case Code	Packaging Code	RoHS Compliant Indicator
	227 = 220 µF	M = ±20%	025 = 25 Vdc	See Ratings Table	24 = Tape carrier width (mm) T = Tape & Reel V = High Vibration	

Ratings

Capacitance (uF)	Voltage Rating (Vdc)	CDE Part Number	Max. DCL (uA)	Max. DF @120 Hz/20°C	Max. E.S.R. @ 100kHz/+20°C (ohms)	Max. Ripple Current @ 100kHz/+125 °C (A rms)	D (mm)	L (mm)	Case Code	QTY/ reel
25Vdc (32 Vdc Surge)										
220	25	HZC227M025F24VT-F	55.0	0.14	0.027	1.6	8	10.5	F	500
330	25	HZC337M025G24VT-F	82.5	0.14	0.020	2.0	10	10.5	G	500
35Vdc (44 Vdc Surge)										
150	35	HZC157M035F24VT-F	52.5	0.12	0.027	1.6	8	10.5	F	500
270	35	HZC277M035G24VT-F	94.5	0.12	0.020	2.0	10	10.5	G	500
50Vdc (63 Vdc Surge)										
68	50	HZC686M050F24VT-F	34.0	0.10	0.030	1.25	8	10.5	F	500
100	50	HZC107M050G24VT-F	50.0	0.10	0.028	1.60	10	10.5	G	500
63Vdc (79 Vdc Surge)										
33	63	HZC336M063F24VT-F	20.7	0.08	0.040	1.10	8	10.5	F	500
56	63	HZC566M063G24VT-F	35.2	0.08	0.030	1.40	10	10.5	G	500

High Vibration
Type HZC_V -55 ºC to +125 ºC
SMT Hybrid Polymer-Aluminum Electrolytic Capacitors

Load Life Test

Test	Apply the maximum rated voltage for 4,000 hrs at +125 °C with full rated ripple current. After the test measure the capacitance, DF, DCL and ESR at +20 °C. Also measure the ESR at -40 °C and 100kHz.
ΔC at 120Hz	Capacitance will be within ±30% of the initial measured value
DF at 120 Hz	DF will be ≤ 200% of the initial specified value
DCL after 2 minute charge	Leakage current will be ≤ the initial specified value
ESR at 100kHz/+20 °C	ESR will be ≤ 200% of the initial specified value
Max. ESR at 100kHz/-40 °C after Load Life test	Case Code C : 2.0 Ω; Case Code D : 1.4 Ω; Case Code X : 0.8 Ω; Case Code F : 0.4 Ω; Case Code G : 0.3 Ω

Shelf Life Test

Test	Subject the capacitor to 1000 hrs at +125 °C without voltage. After the test, return the capacitor to room temperature for two hours and then apply rated voltage for 30 minutes. The after test measurements for capacitance, DF, DCL and ESR at +20 °C will meet the following.
ΔC at 120 Hz	Capacitance will be within ±30% of the initial measured value
DF at 120 Hz	DF will be ≤ 200% of the initial specified value
DCL after 2 minute charge	Leakage current will be ≤ the initial specified value
ESR at 100Khz/+20 °C	ESR will be ≤ 200% of the initial specified value

Moisture Resistance Test

Test	Subject the capacitor to 2000 hrs at +85 °C/85%RH with rated voltage. After the test, return the capacitor to room temperature and humidity for two hours. The after test measurements for capacitance, DF, DCL and ESR at +20 °C will meet the following.
ΔC at 120 Hz	Capacitance will be within ±30% of the initial measured value
DF at 120 Hz	DF will be ≤ 200% of the initial specified value
DCL after 2 minute charge	Leakage current will be ≤ the initial specified value
ESR at 100Khz/+20 °C	ESR will be ≤ 200% of the initial specified value

Temperature Cycle Test

Test	Subject the capacitor to 1000 cycles of temperature change from -55 °C to +125 °C using the following sequence and durations. **Step / Temperature / Time at Temperature** 1 / -55 ºC / 30 minutes 2 / +20 ºC / 3 minutes max 3 / +125 ºC / 30 minutes 4 / +20 ºC / 3 minutes max After the test, return the capacitor to +20°C for one to two hours before measurement. The after test measurements for capacitance, DF, and DCL at +20 °C will meet the following;
ΔC at 120 Hz	Capacitance will be within ±20% of the initial measured value
DF at 120 Hz	DF will be ≤ 200% of the initial specified value
DCL after 2 minute charge	Leakage current will be ≤ the initial specified value
Appearance	No significant change in appearance

High Vibration Test

Test	Capacitors with the high vibration base will pass a 30 G acceleration test from 5 Hz to 2000 Hz with a max. amplitude of 5 mm (peak to peak) for 2 hours each in the X,Y and Z directions for a total of 6 hours. During the last 30 minutes of the test, the measured capacitance shall be stable. After the test the capacitor shall meet the following:
ΔC at 120 Hz	Capacitance value will be within 5% of the initial value
Appearance	No significant change in appearance

High Vibration
Type HZC_V -55 ºC to +125 ºC

SMT Hybrid Polymer-Aluminum Electrolytic Capacitors

Reel Dimensions

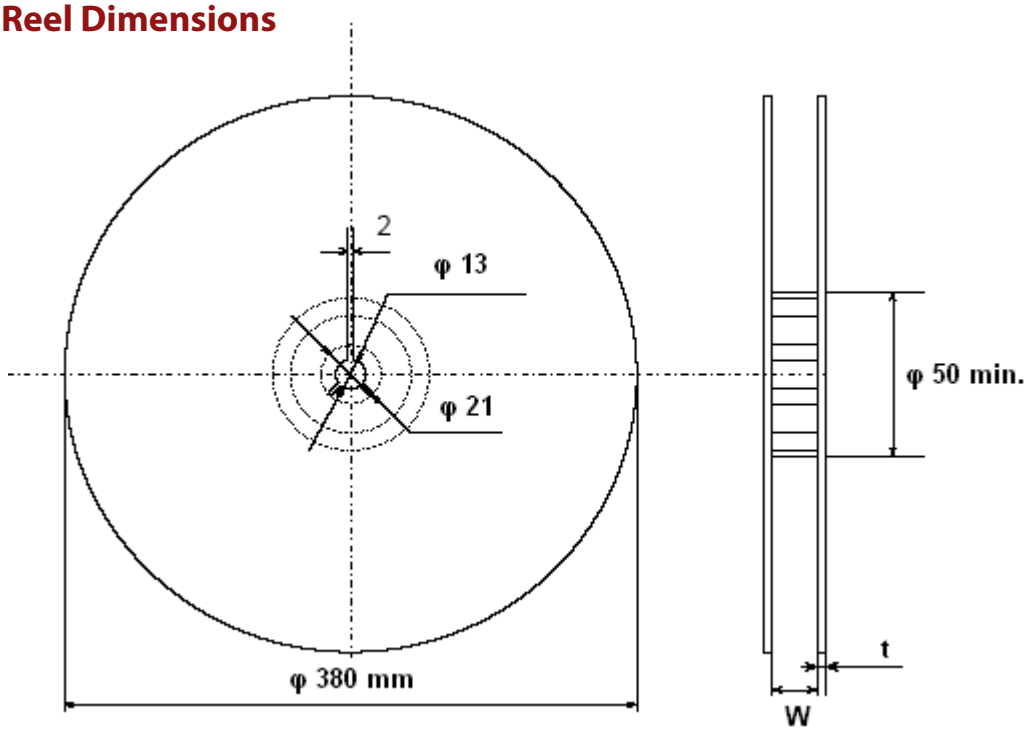

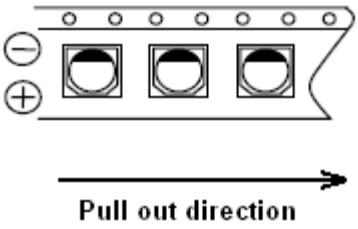

mm

Case Dia.	8	10
W	26	26
t	3	3

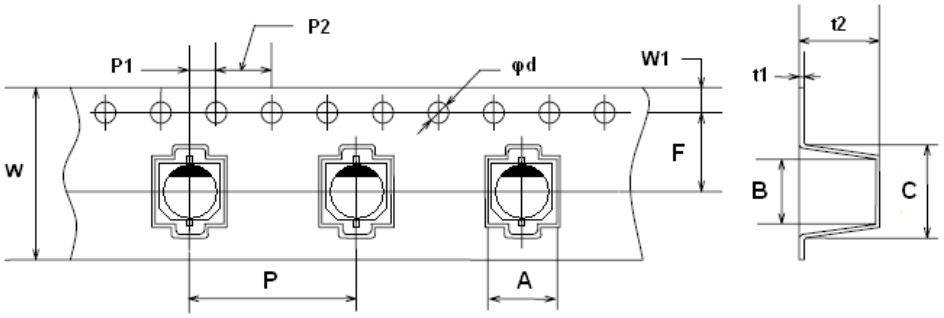

mm

Case Size (mm)	Case Code	W ± 0.3	A ± 0.2	B +0.3/-0.2	C ± 0.5	F ± 0.1	P ± 0.1	t1	t2 ± 0.2	φd +0.1/-0	P1 ± 0.1	P2 ± 0.1	W1 ± 0.1
8 x 10.2	F	24	8.7	8.7	12.5	11.5	16	0.4	11	1.5	2	4	1.75
10 x 10.2	G		10.7	10.7	14.5								

Recommended Land Dimensions

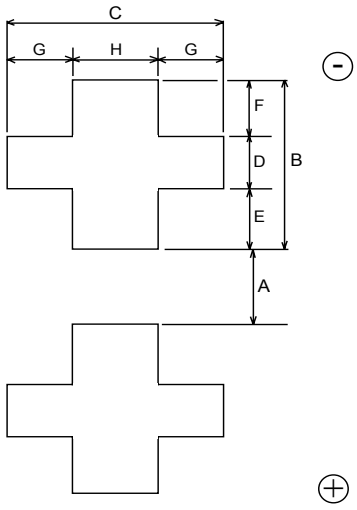

Case Code	Case Dia.	A	B	C	D	E	F	G	H
F	8	2.7	4.0	4.7	1.3	1.0	1.7	1.1	2.5
G	10	3.9	4.4	4.7	1.3	1.2	1.9	1.1	2.5

Recommended Reflow Soldering

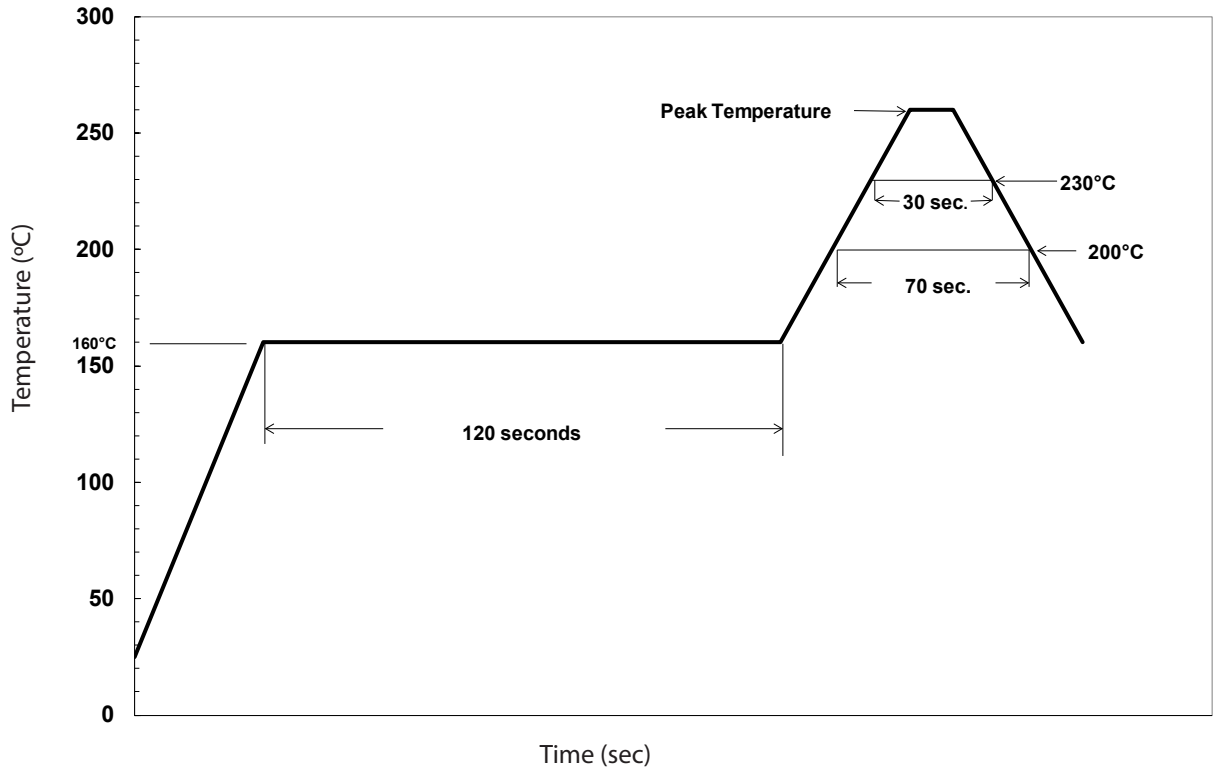

Case Code	Case Dia. (mm)	Peak Temperature	Time at or above 250 °C	Time at or above 230 °C	Time at or above 217 °C	Time at or above 200 °C	Number of Reflow Processes
F	8	260°C	5 seconds	30 seconds	40 seconds	70 seconds	1
G	10						

Notes:

1. The capacitors in the 8m and 10 mm case dia. can withstand 2 reflow processes, if the peak temperature does not exceed 245 °C and the time at or above 240 °C does not exceed 10 seconds.
2. The 2nd reflow process should be performed after the capacitors have returned to room temperature.
3. Temperature should be measured with a thermal couple placed on the top surface of the capacitor.
4. After reflow soldering, the leakage current, D.F., and e.s.r., will meet the initial specifications, and the capacitance will be within ±10% of the initial measured value when measured at room conditions.

Notice and Disclaimer: All product drawings, descriptions, specifications, statements, information and data (collectively, the "Information") in this datasheet or other publication are subject to change. The customer is responsible for checking, confirming and verifying the extent to which the Information contained in this datasheet or other publication is applicable to an order at the time the order is placed. All Information given herein is believed to be accurate and reliable, but it is presented without any guarantee, warranty, representation or responsibility of any kind, expressed or implied. Statements of suitability for certain applications are based on the knowledge that the Cornell Dubilier company providing such statements ("Cornell Dubilier") has of operating conditions that such Cornell Dubilier company regards as typical for such applications, but are not intended to constitute any guarantee, warranty or representation regarding any such matter – and Cornell Dubilier specifically and expressly disclaims any guarantee, warranty or representation concerning the suitability for a specific customer application, use, storage, transportation, or operating environment. The Information is intended for use only by customers who have the requisite experience and capability to determine the correct products for their application. Any technical advice inferred from this Information or otherwise provided by Cornell Dubilier with reference to the use of any Cornell Dubilier products is given gratis (unless otherwise specified by Cornell Dubilier), and Cornell Dubilier assumes no obligation or liability for the advice given or results obtained. Although Cornell Dubilier strives to apply the most stringent quality and safety standards regarding the design and manufacturing of its products, in light of the current state of the art, isolated component failures may still occur. Accordingly, customer applications which require a high degree of reliability or safety should employ suitable designs or other safeguards (such as installation of protective circuitry or redundancies or other appropriate protective measures) in order to ensure that the failure of an electrical component does not result in a risk of personal injury or property damage. Although all product-related warnings, cautions and notes must be observed, the customer should not assume that all safety measures are indicated in such warnings, cautions and notes, or that other safety measures may not be required.