N-Channel Enhancement Mode MOSFET

Features

- 40V/80A,
  $R_{DS(ON)}$=4.0 mΩ (typ.) @ V_{GS}=10V
  $R_{DS(ON)}$=4.6 mΩ (typ.) @ V_{GS}=4.5 V
- Avalanche Rated
- Reliable and Rugged
- Halogen Free and Green Devices Available (RoHS Compliant)

Pin Description

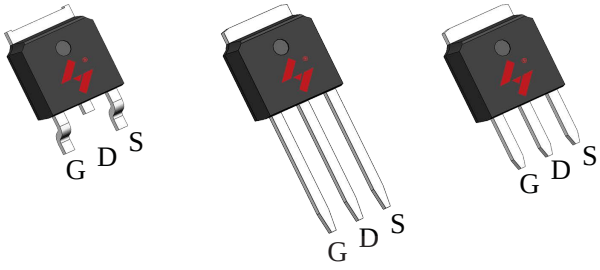

TO-252-2L TO-251-3L TO-251-3S

Applications

- Switching Application
- Power Management for DC/DC

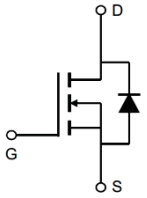

N-Channel MOSFET

Ordering and Marking Information

D	U	V
HY1804	HY1804	HY1804
YYXXXJWW G	YYXXXJWW G	YYXXXJWW G

Package Code
D: TO-252-2L U: TO-251-3L V:TO-251-3S

Date Code
YYXXX WW

Assembly Material
G:Halogen Free

Note: HUAYI lead-free products contain molding compounds/die attach materials and 100% matte tin plate Termi-Nation finish;which are fully compliant with RoHS. HUAYI lead-free products meet or exceed the lead-Free require-ments of IPC/JEDEC J-STD-020 for MSL classification at lead-free peak reflow temperature. HUAYI defines “Green” to mean lead-free (RoHS compliant) and halogen free (Br or Cl does not exceed 900ppm by weight in homogeneous material and total of Br and Cl does not exceed 1500ppm by weight).

HUAYI reserves the right to make changes, corrections, enhancements, modifications, and improveme nts to this pr-oduct and/or to this document at any time without notice.

Absolute Maximum Ratings

Symbol	Parameter		Rating	Unit
Common Ratings (T_C=25°C Unless Otherwise Noted)				
V_{DSS}	Drain-Source Voltage		40	V
V_{GSS}	Gate-Source Voltage		±20	
T_J	Maximum Junction Temperature		175	℃
T_{STG}	Storage Temperature Range		-55 to 175	℃
I_S	Diode Continuous Forward Current	T_C=25℃	80	A
Mounted on Large Heat Sink				
I_{DM}	Pulsed Drain Current *	T_C=25℃	320**	A
I_D	Continuous Drain Current	T_C=25℃	80	A
		T_C=100℃	54	
P_D	Maximum Power Dissipation	T_C=25℃	62.5	W
		T_C=100℃	31.2	
$R_{\theta JC}$	Thermal Resistance-Junction to Case		2.4	℃/W
$R_{\theta JA}$	Thermal Resistance-Junction to Ambient		110	℃/W
E_{AS}	Drain-Source Avalanche Energy	L=0.3mH	340***	mJ

Note：* Repetitive rating ; pulse width limiited by junction temperature
** Drain current is limited by junction temperature
*** VD=32V

Electrical Characteristics (T_C = 25°C Unless Otherwise Noted)

Symbol	Parameter	Test Conditions	HY1804			Unit
			Min.	Typ.	Max.	
Static Characteristics						
BV_{DSS}	Drain-Source Breakdown Voltage	V_{GS}=0V, I_{DS}=250μA	40	-	-	V
I_{DSS}	Zero Gate Voltage Drain Current	V_{DS}=40V, V_{GS}=0V	-	-	1	μA
		T_J=85℃	-	-	30	
$V_{GS(th)}$	Gate Threshold Voltage	V_{DS}=V_{GS}, I_{DS}=250μA	1.0	2.0	3.0	V
I_{GSS}	Gate Leakage Current	V_{GS}=±20V, V_{DS}=0V	-	-	±100	nA
$R_{DS(ON)}$ *	Drain-Source On-state Resistance	V_{GS}=10V, I_{DS}=40A	-	4.0	5.0	mΩ
		V_{GS}=4.5V, I_{DS}=40A		4.6	6.0	mΩ
Diode Characteristics						
V_{SD} *	Diode Forward Voltage	I_{SD}=40A, V_{GS}=0V	-	0.8	1.1	V
t_{rr}	Reverse Recovery Time	I_{DS}=40A, dI_{SD}/dt=100A/μs	-	50	-	ns
Q_{rr}	Reverse Recovery Charge		-	74	-	nC

Electrical Characteristics (Cont.) (T_C = 25°C Unless Otherwise Noted)

Symbol	Parameter	Test Conditions	HY1804			Unit
			Min.	Typ.	Max.	
Dynamic Characteristics						
R_G	Gate Resistance	V_{GS}=0V,V_{DS}=0V,F=1MHz	-	2.8	-	Ω
C_{iss}	Input Capacitance	V_{GS}=0V, V_{DS}=25V, Frequency=1.0MHz	-	4280	-	pF
C_{oss}	Output Capacitance		-	461	-	
C_{rss}	Reverse Transfer Capacitance		-	324	-	
$t_{d(ON)}$	Turn-on Delay Time	V_{DD}=20V, R_G=4Ω, I_{DS}=40A, V_{GS}=10V,	-	21	-	ns
T_r	Turn-on Rise Time		-	25	-	
$t_{d(OFF)}$	Turn-off Delay Time		-	27	-	
T_f	Turn-off Fall Time		-	31	-	
Gate Charge Characteristics						
Q_g	Total Gate Charge	V_{DS}=32V, V_{GS}=10V, I_{DS}=40A	-	90	-	nC
Q_{gs}	Gate-Source Charge		-	7.8	-	
Q_{gd}	Gate-Drain Charge		-	19	-	

Note * : Pulse test ; pulse width ≤300μs, duty cycle≤2%.

Typical Operating Characteristics

Power Dissipation

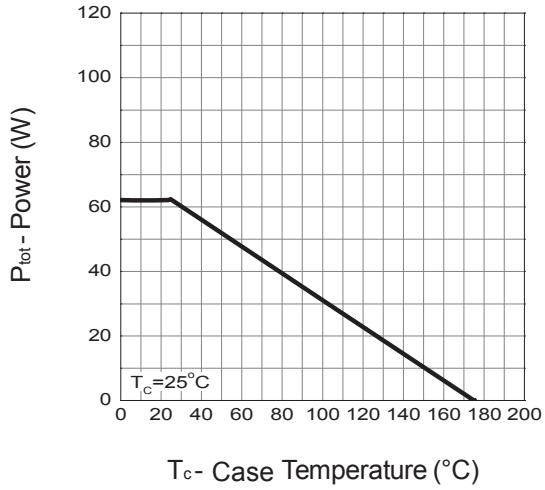

Drain Current

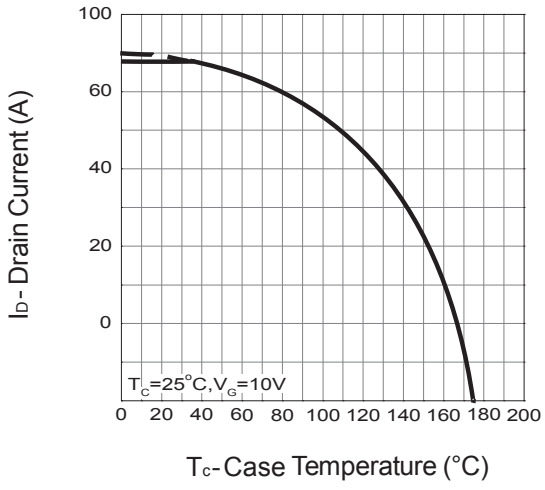

Safe Operation Area

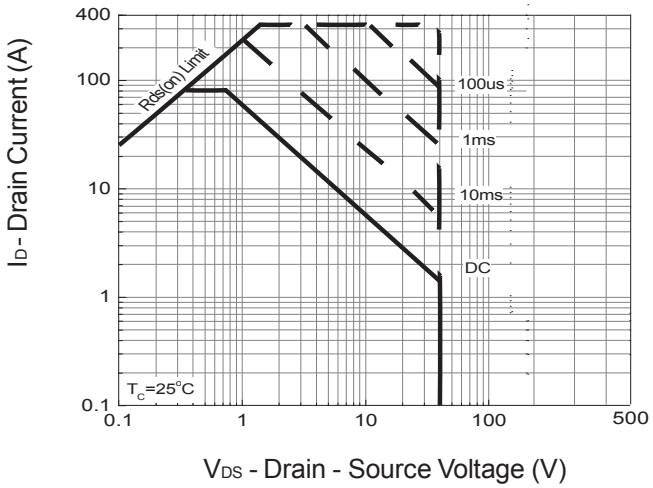

Thermal Transient Impedance

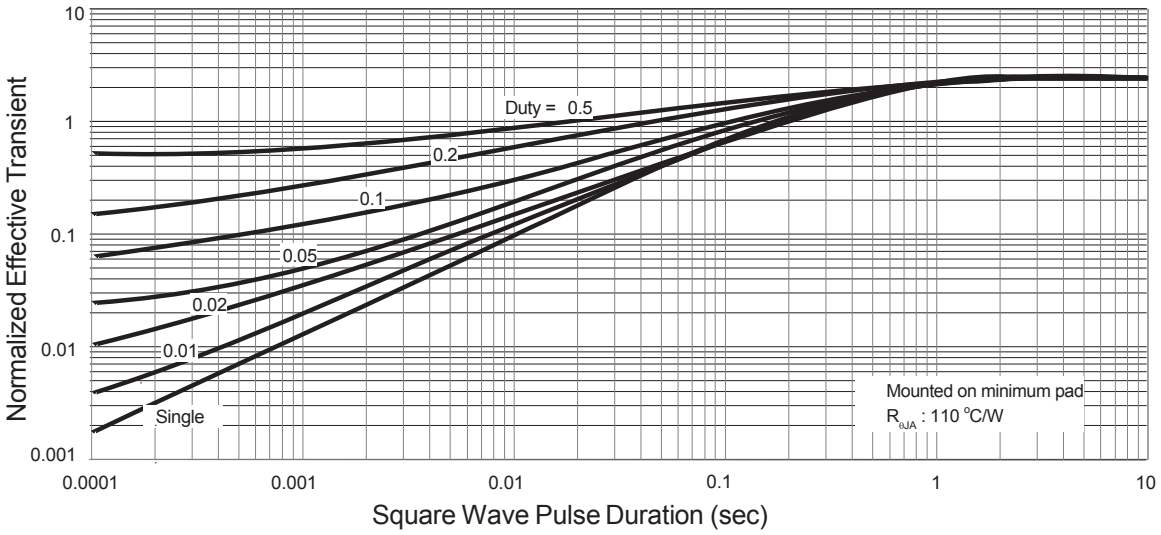

Typical Operating Characteristics (Cont.)

Output Characteristics

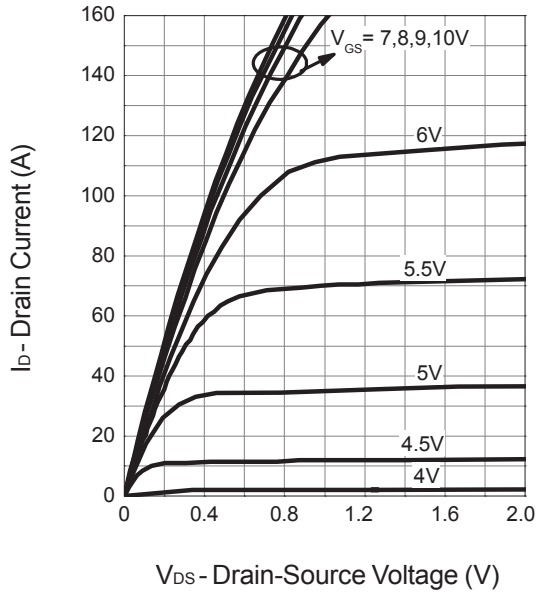

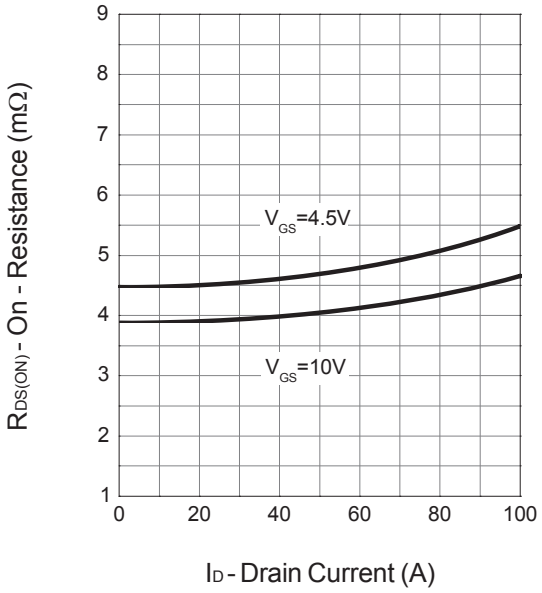

Drain-Source On Resistance

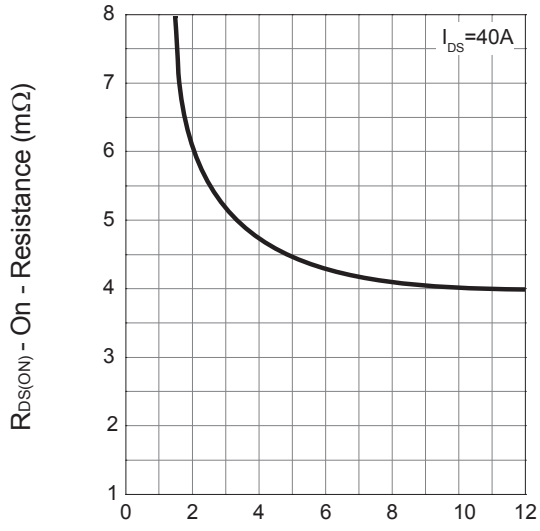

Gate Threshold Voltage

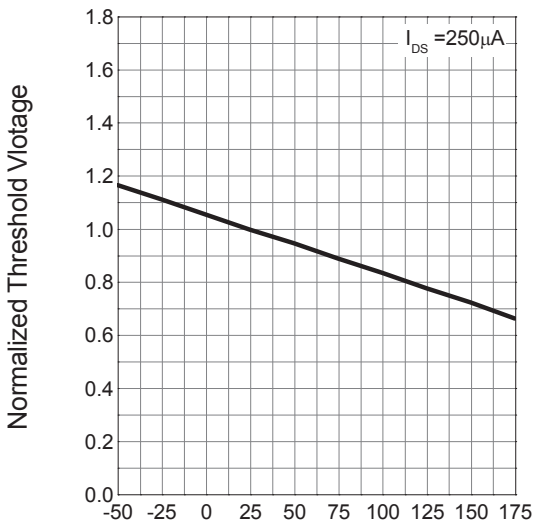

Typical Operating Characteristics (Cont.)

Drain-Source On Resistance

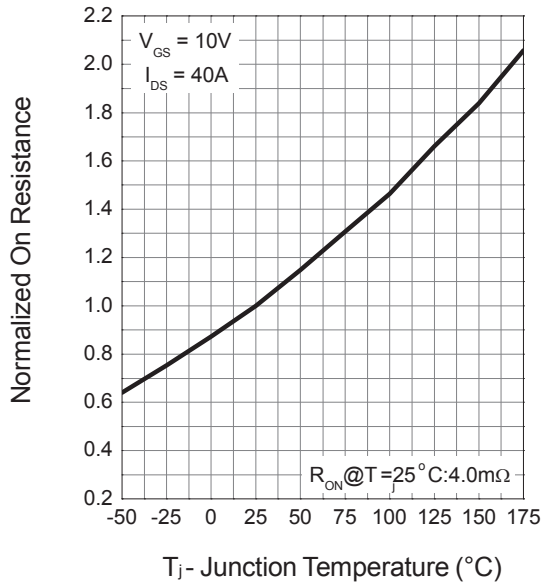

Source-Drain Diode Forward

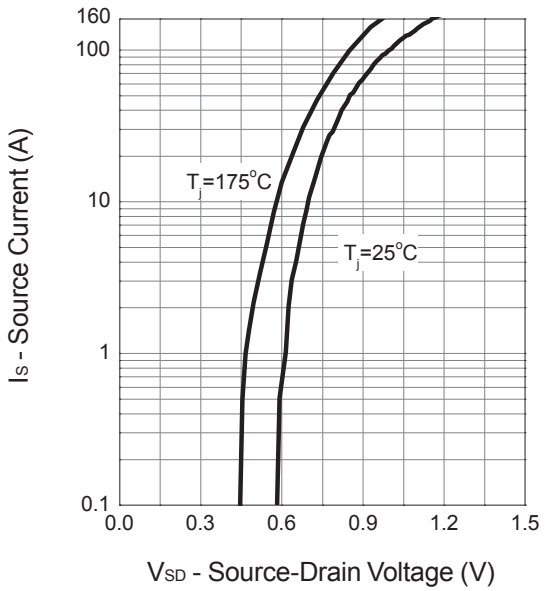

Capacitance

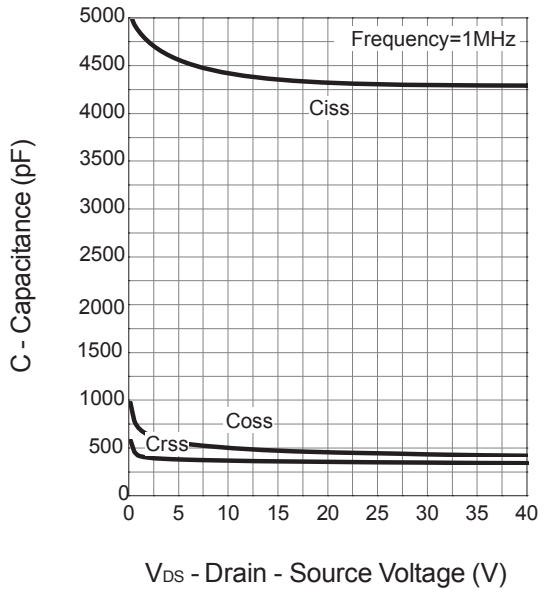

Gate Charge

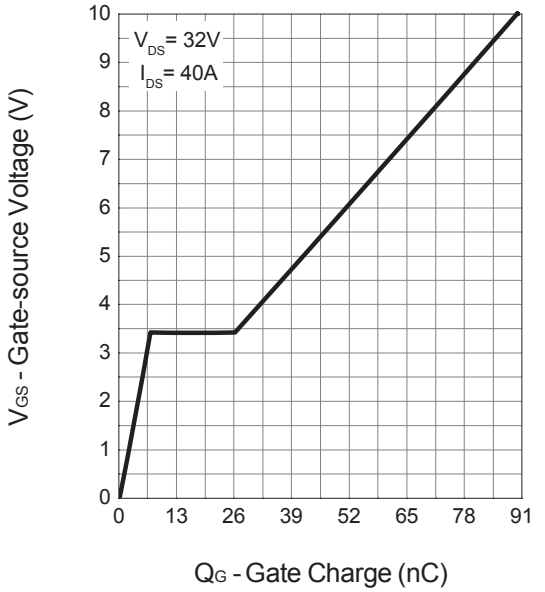

Avalanche Test Circuit

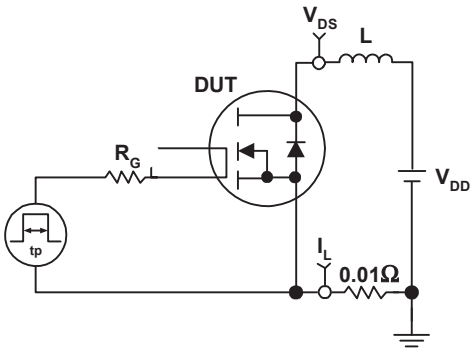

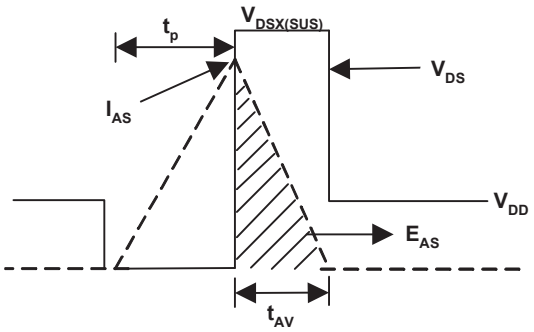

Switching Time Test Circuit

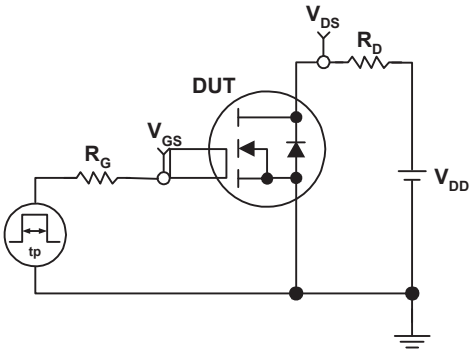

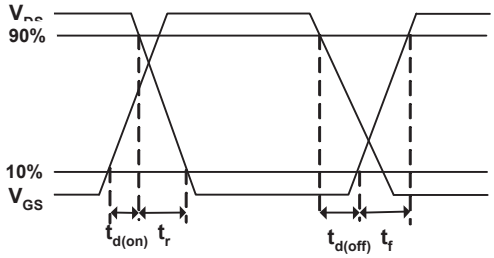

Package Information

TO-252-2L

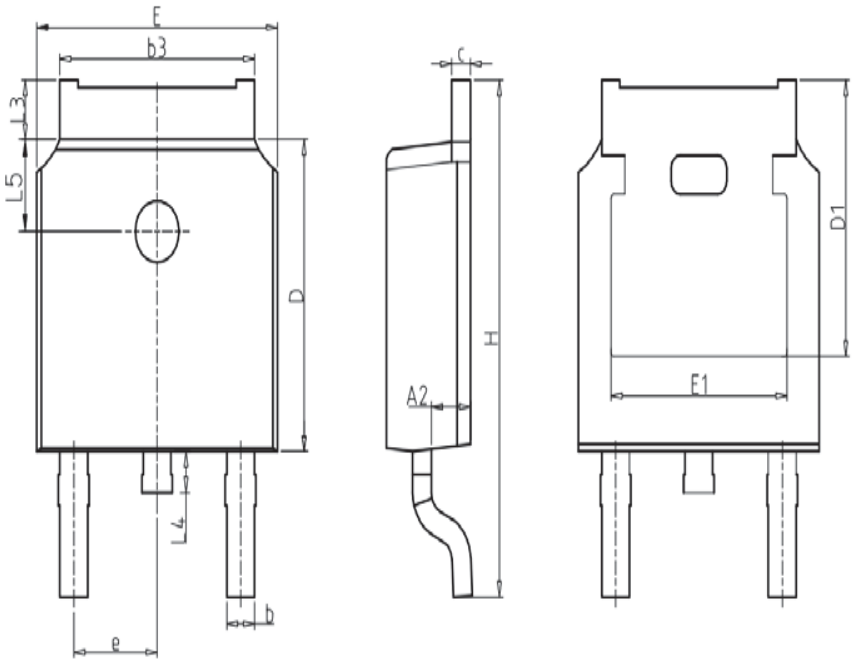

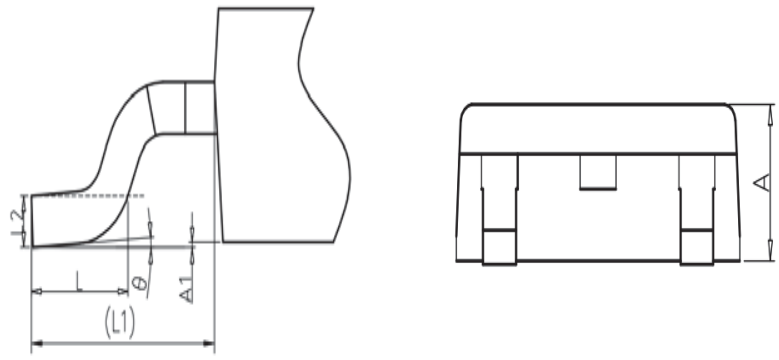

SECTION C-C

COMMON DIMENSIONS

SYMBOL	mm		
	MIN	NOM	MAX
A	2.20	2.30	2.40
A1	0.00	-	0.20
A2	0.97	1.07	1.17
b	0.68	0.78	0.90
b3	5.20	5.33	5.50
c	0.43	0.53	0.63
D	5.98	6.10	6.22
D1	5.30REF		
E	6.40	6.60	6.80
E1	4.63	-	-
e	2.286BSC		
H	9.40	10.10	10.50
L	1.38	1.50	1.75
L1	2.90REF		
L2	0.51BSC		
L3	0.88	-	1.28
L4	-	-	1.00
L5	1.65	1.80	1.95
θ	0°	-	8°

TO-251-3L

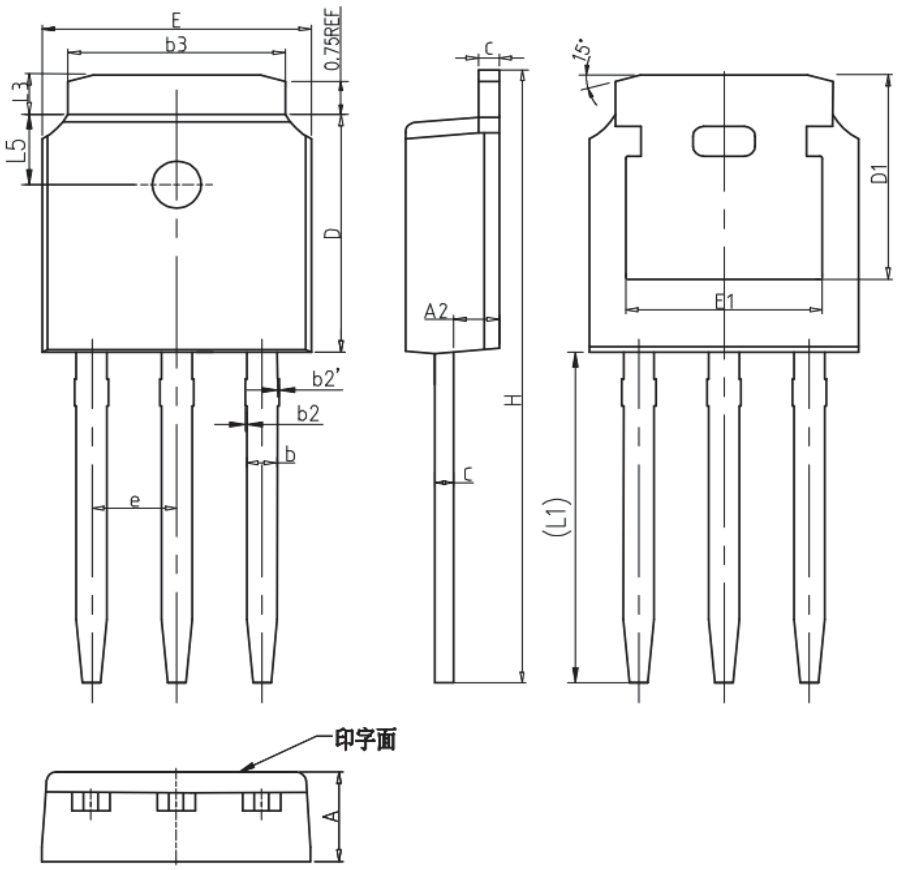

COMMON DIMENSIONS

SYMBOL	mm		
	MIN	NOM	MAX
A	2.20	2.30	2.40
A2	0.97	1.07	1.17
b	0.68	0.78	0.90
b2	0.00	0.04	0.10
b2'	0.00	0.04	0.10
b3	5.20	5.33	5.50
c	0.43	0.53	0.63
D	5.98	6.10	6.22
D1	5.30REF		
E	6.40	6.60	6.80
E1	4.63	-	-
e	2.286BSC		
H	16.22	16.52	16.82
L1	9.15	9.40	9.65
L3	0.88	1.02	1.28
L5	1.65	1.80	1.95

TO-251-3S

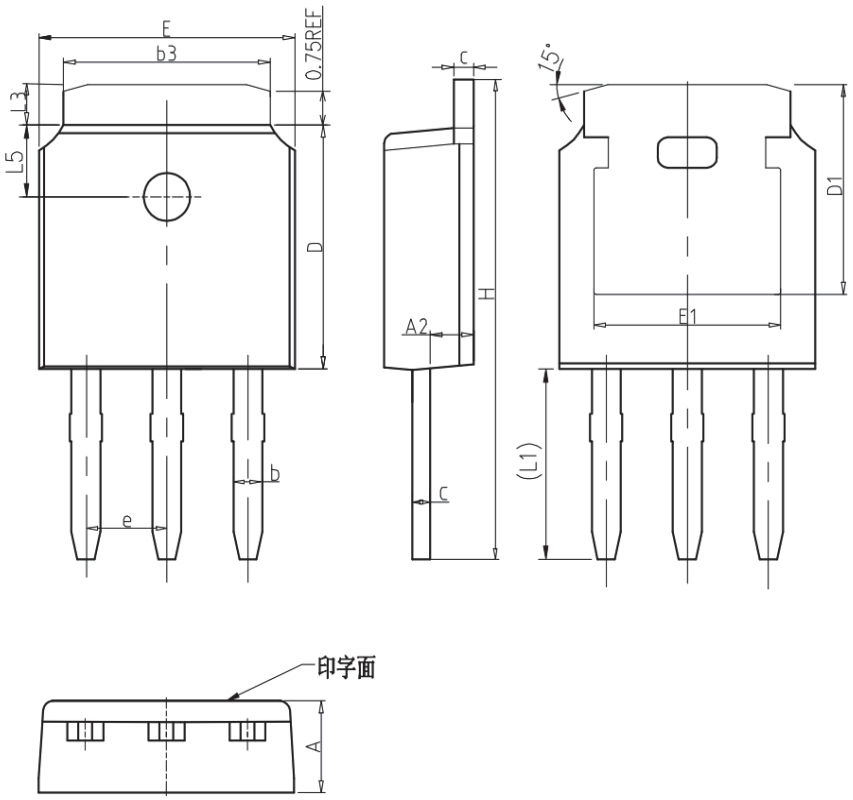

COMMON DIMENSIONS

SYMBOL	mm		
	MIN	NOM	MAX
A	2.20	2.30	2.40
A2	0.97	1.07	1.17
b	0.68	0.78	0.90
b3	5.20	5.33	5.50
c	0.43	0.53	0.63
D	5.98	6.10	6.22
D1	5.30REF		
E	6.40	6.60	6.80
E1	4.63	-	-
e	2.286BSC		
H	10.00	11.22	11.44
L1	3.90	4.10	4.30
L3	0.88	1.02	1.28
L5	1.65	1.80	1.95

Device Per Unit

Package Type	Unit	Quantity
TO-252-2L	Tube	75
TO-252-2L	Reel	2500
TO-251-3L	Tube	75
TO-251-3S	Tube	75

Classification Profile

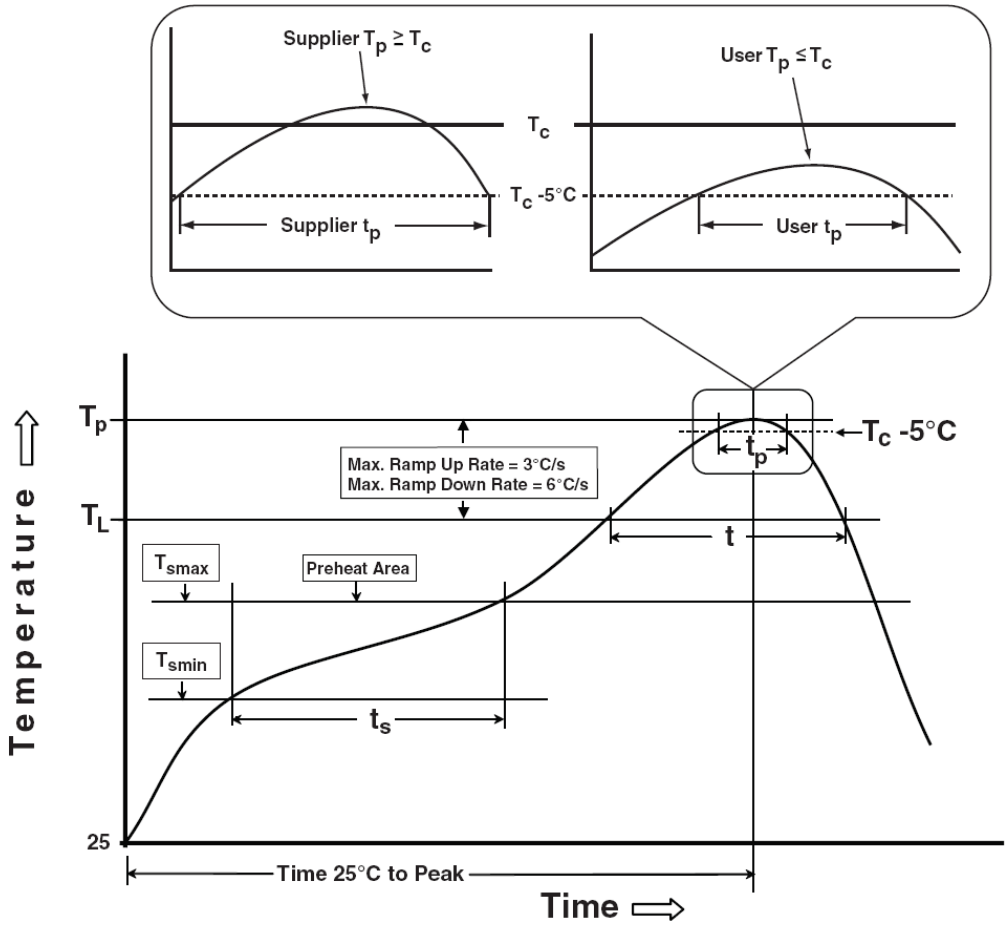

Classification Reflow Profiles

Profile Feature	Sn-Pb Eutectic Assembly	Pb-Free Assembly
Preheat & Soak Temperature min (T_{smin}) Temperature max (T_{smax}) Time (T_{smin} to T_{smax}) (t_s)	 100 °C 150 °C 60-120 seconds	 150 °C 200 °C 60-120 seconds
Average ramp-up rate (T_{smax} to T_P)	3 °C/second max.	3°C/second max.
Liquidous temperature (T_L) Time at liquidous (t_L)	183 °C 60-150 seconds	217 °C 60-150 seconds
Peak package body Temperature (T_p)*	See Classification Temp in table 1	See Classification Temp in table 2
Time (t_P)** within 5°C of the specified classification temperature (T_c)	20** seconds	30** seconds
Average ramp-down rate (T_p to T_{smax})	6 °C/second max.	6 °C/second max.
Time 25°C to peak temperature	6 minutes max.	8 minutes max.
* Tolerance for peak profile Temperature (T_p) is defined as a supplier minimum and a user maximum. ** Tolerance for time at peak profile temperature (t_p) is defined as a supplier minimum and a user maximum.		

Table 1. SnPb Eutectic Process – Classification Temperatures (Tc)

Package Thickness	Volume mm^3 <350	Volume mm^3 ≥350
<2.5 mm	235 °C	220 °C
≥2.5 mm	220 °C	220 °C

Table 2. Pb-free Process – Classification Temperatures (Tc)

Package Thickness	Volume mm^3 <350	Volume mm^3 350-2000	Volume mm^3 >2000
<1.6 mm	260 °C	260 °C	260 °C
1.6 mm – 2.5 mm	260 °C	250 °C	245 °C
≥2.5 mm	250 °C	245 °C	245 °C

Reliability Test Program

Test item	Method	Description
SOLDERABILITY	JESD-22, B102	5 Sec, 245°C
HOLT	JESD-22, A108	168 Hrs /500 Hrs /1000 Hrs, Bias @ 150°C
PCT	JESD-22, A102	96 Hrs, 100%RH, 2atm, 121°C
TCT	JESD-22, A104	500 Cycles, -55°C~150°C

Customer Service

Worldwide Sales and Service: sales@hymexa.com

Technical Support: Technology@hymexa.com

Huayi Microelectronics Co., Ltd.

No.8928,Shangji Road,Economic and Technological Development Zone,Xi'an,China

TEL: (86-029) 86685706

FAX: (86-029) 86685705

E-mail: sales@hymexa.com

Web net: www.hymexa.com