Current Transducer HX 03 .. 50-P

I_{PN} = 3 .. 50 A

For the electronic measurement of currents: DC, AC, pulsed, mixed, with a galvanic isolation between the primary circuit (high power) and the secondary circuit (electronic circuit).

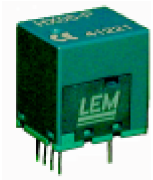

Electrical data

Primary nominal r.m.s. current I_{PN} (A)	Primary current measuring range I_P (A)	Primary Conductor Diameter x Turns (mm)	Type
3	± 9	0.6d x 20T	**HX 03-P**
5	± 15	0.8d x 12T	**HX 05-P**
10	± 30	1.1d x 6T	**HX 10-P**
15	± 45	1.4d x 4T	**HX 15-P**
20	± 60	1.6d x 3T	**HX 20-P**
25	± 75	1.6d x 2T	**HX 25-P**
50	± 150	1.2 x 6.3 x 1T	**HX 50-P**

V_{OUT}	Output voltage @ ± I_{PN}, R_L = 10 kΩ, T_A = 25°C	± 4	V
R_{OUT}	Output impedance	< 50	Ω
R_L	Load resistance	≥ 10	kΩ
V_C	Supply voltage (± 5 %)[1]	± 15	V
I_C	Current consumption	< ± 15	mA
V_d	R.m.s. voltage for AC isolation test, 50/60Hz, 1 mn	> 3	kV
V_e	R.m.s. voltage for partial discharge extinction at 10pC	≥ 1	kV
	Impulse withstand voltage, 1.2/50µs	≥ 6	kV

Accuracy-Dynamic performance data

X	Accuracy @ I_{PN}, T_A = 25°C (without offset)		< ± 1	% of I_{PN}
ε_L	Linearity (0 .. ± I_{PN})		< ± 1	% of I_{PN}
V_{OE}	Electrical offset voltage, T_A = 25°C		< ± 40	mV
V_{OH}	Hysteresis offset voltage @ I_P = 0; after an excursion of 3 x I_{PN}		< ± 15	mV
V_{OT}	Thermal drift of V_{OE}	max.	± 1.5	mV/K
TCE_G	Thermal drift of the gain (% of reading)		± 0.1	%/K
t_r	Response time @ 90% of I_P		≤ 3	µs
f	Frequency bandwidth (-3 dB) [2]		50	kHz

General data

T_A	Ambient operating temperature	- 25 .. + 85	°C
T_S	Ambient storage temperature	- 25 .. + 85	°C
m	Mass	8	g
	Min. internal creepage distance/clearance	≥ 5.5	mm
	Isolation material group	I	
	Standards	EN50178	

Notes :[1] Also operate at ±12V power supplies, measuring range reduced to ±2.5x I_{PN}

[2] Small signal only to avoid excessive heating of the magnetic cores

Features

- Galvanic isolation between primary and secondary circuit
- Hall effect measuring principle
- Isolation voltage 3000V
- Low power consumption
- Extended measuring range (3x I_{PN})
- Power supply from ±12V to ±15V
- Material according to UL94-V0

Advantages

- Low insertion losses
- Easy to mount with automatic handling system
- Small size and space saving
- Only one design for wide current ratings range
- High immunity to external interference.

Applications

- Switched Mode Power Supplies (SMPS)
- AC variable speed drives
- Uninterruptible Power Supplies (UPS)
- Electrical appliances
- Battery supplied applications
- DC motor drives

HX 03 .. 50-P (in mm)

HX 03...25-P

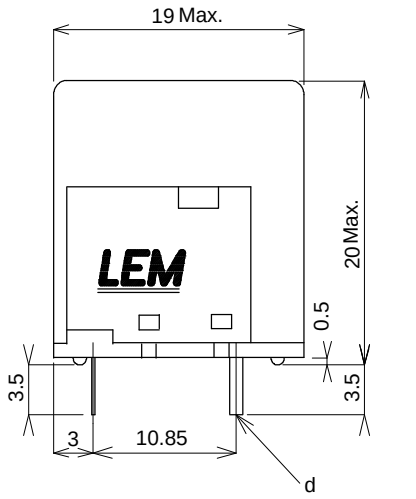

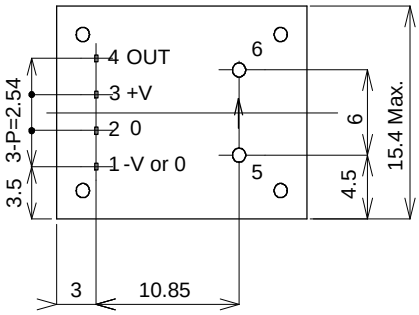

HX 50-P

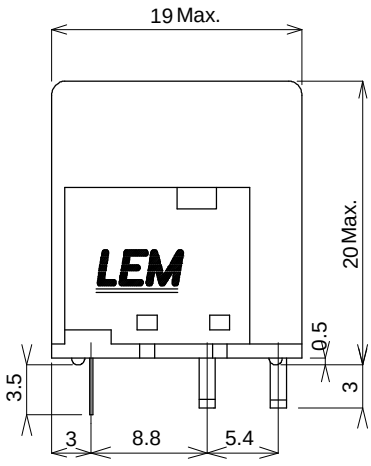

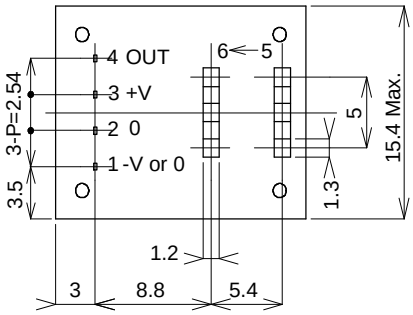

Top view



Terminal Pin Identification

1.....-15V
2.....0V
3.....+15V
4.....Output

5.....Primary input Current(+)
6.....Primary input Current(-)

Primary conductor diameter / dimension

HX	03-P	05-P	10-P	15-P	20-P	25-P	50-P
d	0.6	0.8	1.1	1.4	1.6	1.6	1.2x6.3

Secondary pins dimension

0.5x0.25

Specifications subject to change without notice.