High-Efficiency, Low-Supply-Current, Compact, Step-Up DC-DC Converters

General Description

The HWD20011/HWD2001/HWD20012 compact, high effIciency, step-up DC-DC converters fit in small MSOP packages. They feature a built-in synchronous rectifier, which improves efficiency and reduces size and cost by eliminating the need for an external Schottky diode. Quiescent supply current is only 16µA.

The input voltage ranges from 0.7V to V_{OUT}, where V_{OUT} can be set from 2V to 5.5V. Start-up is guaranteed from 1.1V inputs. The HWD20011/HWD2001/HWD20012 have a preset, pin-selectable output for 5V or 3.3V. The outputs can also be adjusted to other voltages using two external resistors.

All three devices have a 0.3Ω N-channel MOSFET power switch. The HWD20011 has a 1A current limit. The HWD2001 has a 0.5A current limit, which permits the use of a smaller inductor. The HWD20012 comes in a 10-pin MSOP package and features an adjustable current limit and circuitry to reduce inductor ringing.

Applications

Pagers
Wireless Phones
Medical Devices
Hand-Held Computers
PDAs
RF Tags
1 to 3-Cell Hand-Held Devices

Typical Operating Circuit

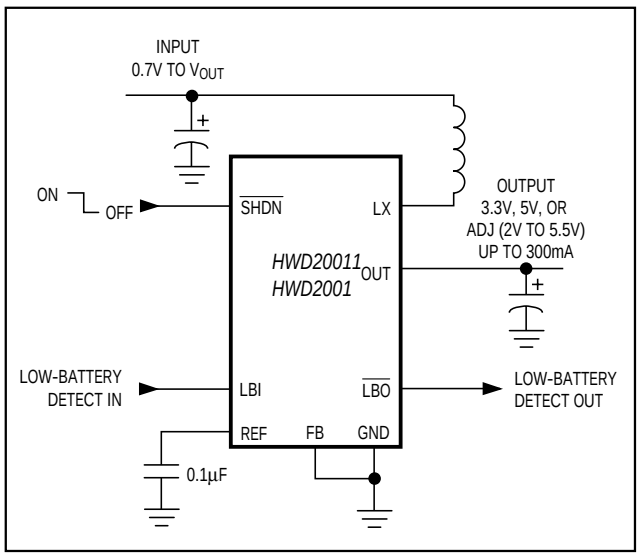

Features

- **94% Efficient at 200mA Output Current**
- **16µA Quiescent Supply Current**
- **Internal Synchronous Rectifier (no external diode)**
- **0.1µA Logic-Controlled Shutdown**
- **LBI/LBO Low-Battery Detector**
- **Selectable Current Limit for Reduced Ripple**
- **Low-Noise, Anti-Ringing Feature (HWD20012)**
- **8-Pin and 10-Pin MSOP Packages**
- **Preassembled Evaluation Kit (HWD20012EVKIT)**

Ordering Information

PART	TEMP. RANGE	PIN-PACKAGE
HWD20011EUA	-40°C to +85°C	8 MSOP
HWD2001EUA	-40°C to +85°C	8 MSOP
HWD20012EUB	-40°C to +85°C	10 MSOP

Pin Configurations

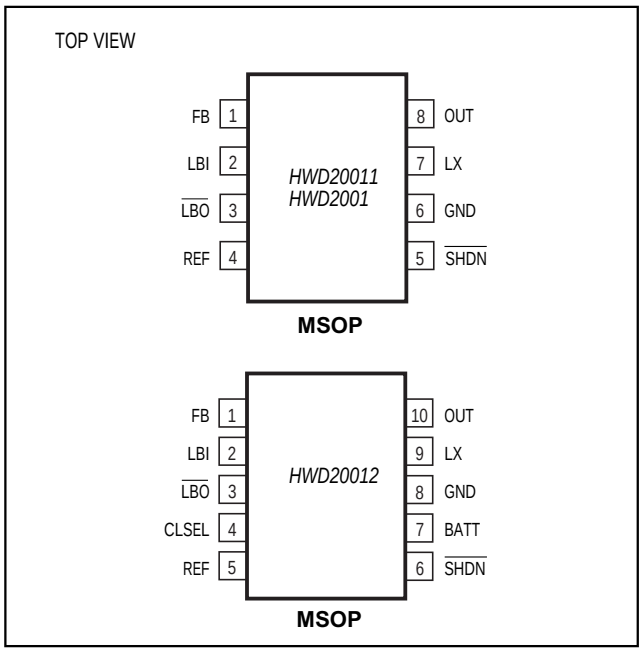

High-Efficiency, Low-Supply-Current, Compact, Step-Up DC-DC Converters

ABSOLUTE MAXIMUM RATINGS

Supply Voltage (OUT to GND) .....-0.3V to +6.0V
Switch Voltage (LX to GND) .....-0.3V to (V_{OUT} + 0.3V)
Battery Voltage (BATT to GND).....-0.3V to +6.0V
$\overline{SHDN}$, $\overline{LBO}$ to GND .....-0.3V to +6.0V
LBI, REF, FB, CLSEL to GND .....-0.3V to (V_{OUT} + 0.3V)
Switch Current (LX).....-1.5A to +1.5A
Output Current (OUT) .....-1.5A to +1.5A

Continuous Power Dissipation (T_A = +70°C)
8-Pin MSOP (derate 4.1mW/°C above +70°C) ..... .330mW
10-Pin MSOP (derate 5.6mW/°C above +70°C) 444mW
Operating Temperature Range .....-40°C to +85°C
Junction Temperature.....+150°C
Storage Temperature Range .....-65°C to +165°C
Lead Temperature (soldering, 10s) .....+300°C

ELECTRICAL CHARACTERISTICS

(V_{BATT} = 2V, FB = OUT (V_{OUT} = 3.3V), R_L = ˙∞, **T_A = 0°C to +85°C**, unless otherwise noted. Typical values are at T_A = +25°C.)

PARAMETER	SYMBOL	CONDITIONS		MIN	TYP	MAX	UNITS
Minimum Input Voltage					0.7		V
Operating Voltage	V_{IN}	T_A = +25°C		1.1		5.5	V
Start-Up Voltage		T_A = +25°C, R_L = 3kΩ (Note 1)			0.9	1.1	V
Start-Up Voltage Tempco					-2		mV/°C
Output Voltage	V_{OUT}	FB = OUT		3.17	3.30	3.43	V
		FB = GND		4.80	5	5.20	
Output Voltage Range				2		5.5	V
Steady-State Output Current (Note 2)	I_{OUT}	FB = OUT (V_{OUT} = 3.3V)	HWD20011, HWD20012 (CLSEL = OUT)	300	420		mA
			HWD2001, HWD20012 (CLSEL = GND)	150	220		
		FB = GND (V_{OUT} = 5V)	HWD20011, HWD20012 (CLSEL = OUT)	180	285		
			HWD2001, HWD20012 (CLSEL = GND)	90	130		
Reference Voltage	V_{REF}	I_{REF} = 0		1.274	1.30	1.326	V
Reference Voltage Tempco	TEMPCO				0.024		mV/°C
Reference Voltage Load Regulation	V_{REF_LOAD}	I_{REF} = 0 to 100µA			3	15	mV
Reference Voltage Line Regulation	V_{REF_LINE}	V_{OUT} = 2V to 5.5V			0.08	2.5	mV/V
FB, LBI Input Threshold				1.274	1.30	1.326	V
Internal NFET, PFET On-Resistance	$R_{DS(ON)}$	I_{LX} = 100mA			0.3	0.6	Ω
LX Switch Current Limit (NFET)	I_{LIM}	HWD20011, HWD20012 (CLSEL = OUT)		0.80	1	1.20	A
		HWD2001, HWD20012 (CLSEL = GND)		0.4	0.5	0.65	
LX Leakage Current	I_{LEAK}	V_{LX} = 0, 5.5V; V_{OUT} = 5.5V			0.05	1	µA

ELECTRICAL CHARACTERISTICS (continued)

(V_{BATT} = 2V, FB = OUT (V_{OUT} = 3.3V), R_L = ˙∞, **T_A = 0°C to +85°C**, unless otherwise noted. Typical values are at T_A = +25°C.)

PARAMETER	SYMBOL	CONDITIONS	MIN	TYP	MAX	UNITS
Operating Current into OUT (Note 3)		V_{FB} = 1.4V, V_{OUT} = 3.3V		16	35	µA
Shutdown Current into OUT		$\overline{SHDN}$ = GND		0.1	1	µA
Efficiency		V_{OUT} = 3.3V, I_{LOAD} = 200mA		90		%
		V_{OUT} = 2V, I_{LOAD} = 1mA		85		
LX Switch On-Time	t_{ON}	V_{FB} = 1V, V_{OUT} = 3.3V	3	4	7	µs
LX Switch Off-Time	t_{OFF}	V_{FB} = 1V, V_{OUT} = 3.3V	0.8	1	1.2	µs
FB Input Current	I_{FB}	V_{FB} = 1.4V		0.03	50	nA
LBI Input Current	I_{LBI}	V_{LBI} = 1.4V		1	50	nA
CLSEL Input Current	I_{CLSEL}	HWD20012, CLSEL = OUT		1.4	3	µA
$\overline{SHDN}$ Input Current	$I_{\overline{SHDN}}$	$V_{\overline{SHDN}}$ = 0 or V_{OUT}		0.07	50	nA
$\overline{LBO}$ Low Output Voltage		V_{LBI} = 0, I_{SINK} = 1mA		0.2	0.4	V
$\overline{LBO}$ Off Leakage Current	$I_{\overline{LBO}}$	$V_{\overline{LBO}}$ = 5.5V, V_{LBI} = 5.5V		0.07	1	µA
Damping Switch Resistance		HWD20012, V_{BATT} = 2V		88	150	Ω
$\overline{SHDN}$ Input Voltage	V_{IL}				$0.2V_{OUT}$	V
	V_{IH}		$0.8V_{OUT}$			
CLSEL Input Voltage	V_{IL}				$0.2V_{OUT}$	V
	V_{IH}		$0.8V_{OUT}$			

ELECTRICAL CHARACTERISTICS

(V_{BATT} = 2V, FB = OUT, R_L = ∞, **T_A = -40°C to +85°C**, unless otherwise noted.) (Note 4)

PARAMETER	SYMBOL	CONDITIONS	MIN	MAX	UNITS
Output Voltage	V_{OUT}	FB = OUT	3.13	3.47	V
		FB = GND	4.75	5.25	
Output Voltage Range			2.20	5.5	V
Reference Voltage	V_{REF}	I_{REF} = 0	1.2675	1.3325	V
FB, LBI Thresholds			1.2675	1.3325	V
Internal NFET, PFET On-Resistance	$R_{DS(ON)}$			0.6	Ω
Operating Current into OUT (Note 3)		V_{FB} = 1.4V, V_{OUT} = 3.3V		40	µA
Shutdown Current into OUT		$\overline{SHDN}$ = GND		1	µA
LX Switch On-Time	t_{ON}	V_{FB} = 1V, V_{OUT} = 3.3V	2.7	7.0	µs
LX Switch Off-Time	t_{OFF}	V_{FB} = 1V, V_{OUT} = 3.3V	0.75	1.25	µs
LX Switch Current Limit (NFET)	I_{LIM}	HWD20012, HWD20012 (CLSEL = OUT)	0.75	1.25	A
		HWD2001, HWD20012 (CLSEL = GND)	0.36	0.69	

High-Efficiency, Low-Supply-Current, Compact, Step-Up DC-DC Converters

ELECTRICAL CHARACTERISTICS (continued)

(V_{BATT} = 2V, FB = OUT, R_L = ∞, **T_A = -40°C to +85°C**, unless otherwise noted.) (Note 4)

PARAMETER	SYMBOL	CONDITIONS	MIN	MAX	UNITS
CLSEL Input Current	I_{CLSEL}	HWD20012, CLSEL = OUT		3	µA
$\overline{SHDN}$ Input Current	$I_{\overline{SHDN}}$	V_{SHDN} = 0 or V_{OUT}		75	nA
$\overline{LBO}$ Off Leakage Current	$I_{\overline{LBO}}$	$V_{\overline{LBO}}$ = 5.5V, V_{LBI} = 5.5V		1	µA

Note 1: Start-up voltage operation is guaranteed with the addition of a Schottky MBR0520 external diode between the input and output.

Note 2: Steady-state output current indicates that the device maintains output voltage regulation under load. See Figures 5 and 6.

Note 3: Device is bootstrapped (power to the IC comes from OUT). This correlates directly with the actual battery supply.

Note 4: Specifications to -40°C are guaranteed by design, not production tested.

Typical Operating Characteristics

(L = 22µH, C_{IN} = 47µF, C_{OUT} = 47µF || 0.1µF, C_{REF} = 0.1µF, T_A = +25°C, unless otherwise noted.)

EFFICIENCY vs. LOAD CURRENT

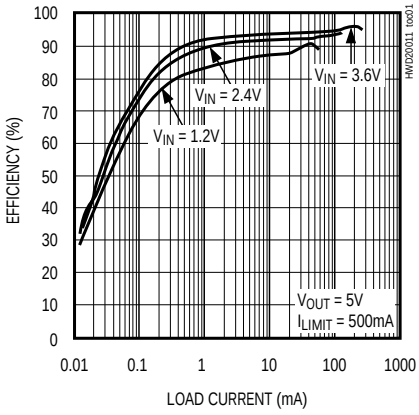

EFFICIENCY vs. LOAD CURRENT

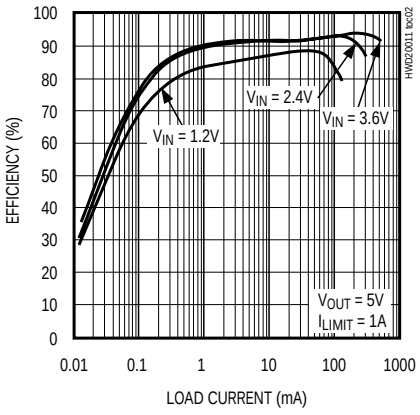

EFFICIENCY vs. LOAD CURRENT

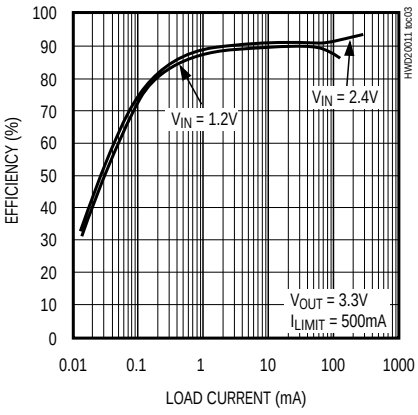

EFFICIENCY vs. LOAD CURRENT

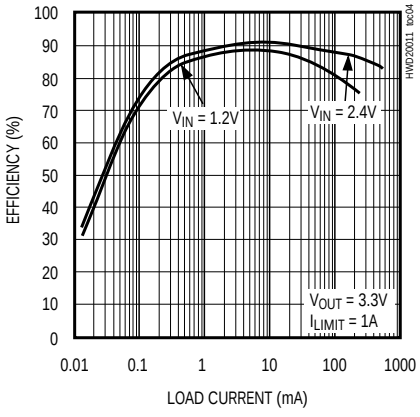

REFERENCE OUTPUT VOLTAGE vs. TEMPERATURE

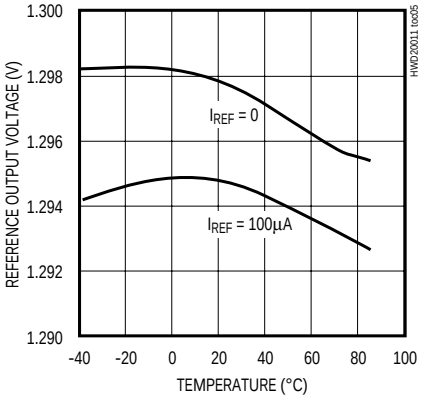

Typical Operating Characteristics (continued)

(L = 22µH, C_{IN} = 47µF, C_{OUT} = 47µF || 0.1µF, C_{REF} = 0.1µF, T_A = +25°C, unless otherwise noted.)

NO-LOAD BATTERY CURRENT vs. INPUT BATTERY VOLTAGE

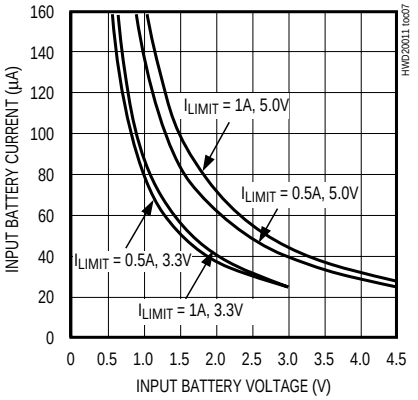

START-UP VOLTAGE vs. LOAD CURRENT

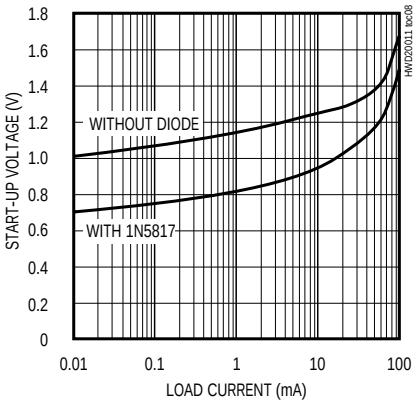

SHUTDOWN CURRENT vs. SUPPLY VOLTAGE

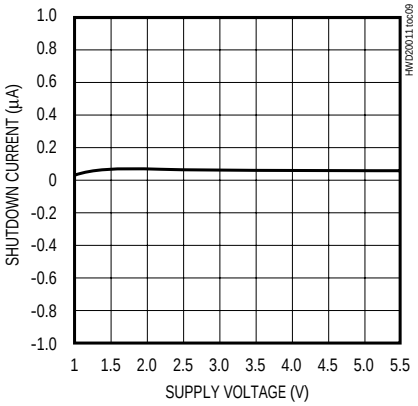

SHUTDOWN THRESHOLD vs. SUPPLY VOLTAGE

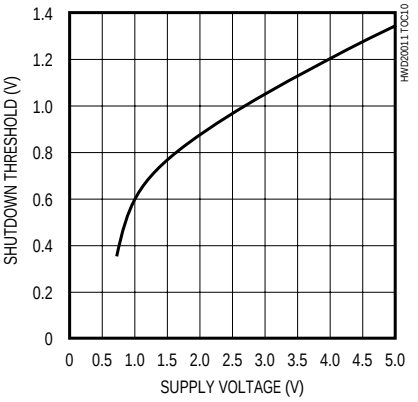

MAXIMUM OUTPUT CURRENT vs. INPUT VOLTAGE (V_{OUT} = 5V)

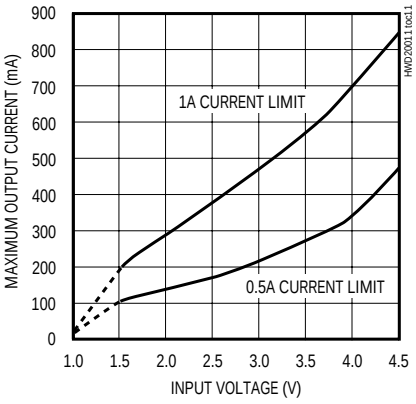

MAXIMUM OUTPUT CURRENT vs. INPUT VOLTAGE (V_{OUT} = 3.3V)

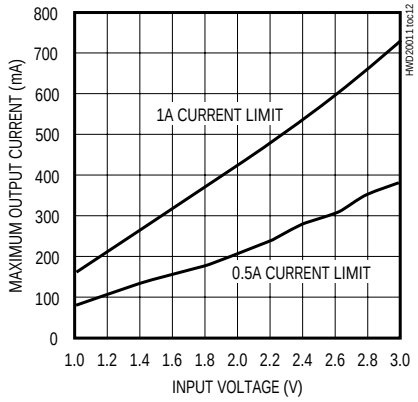

HEAVY-LOAD SWITCHING WAVEFORMS

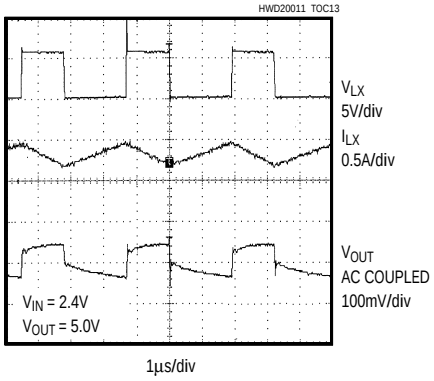

SWITCH RESISTANCE vs. TEMPERATURE

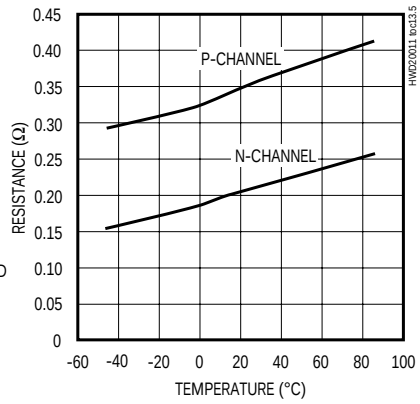

LX CURRENT LIMIT vs. OUTPUT VOLTAGE

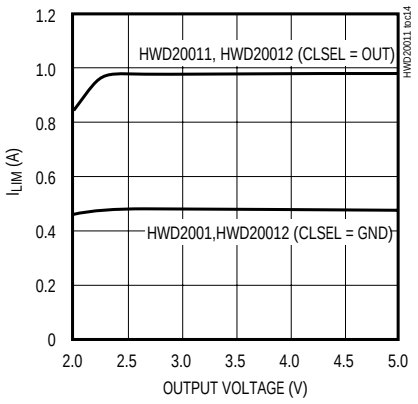

High-Efficiency, Low-Supply-Current, Compact, Step-Up DC-DC Converters

Typical Operating Characteristics (continued)

(L = 22µH, C_{IN} = 47µF, C_{OUT} = 47µF || 0.1µF, C_{REF} = 0.1µF, T_A = +25°C, unless otherwise noted.)

LINE-TRANSIENT RESPONSE

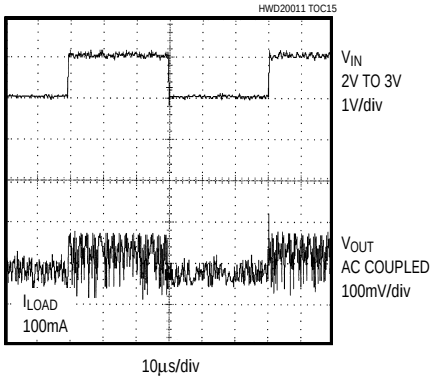

LOAD-TRANSIENT RESPONSE

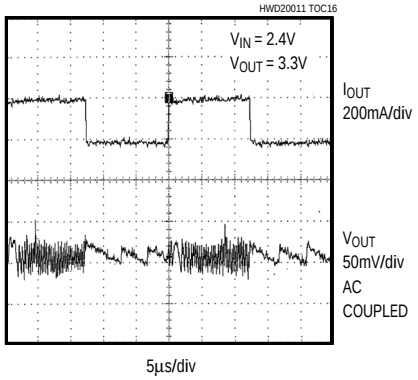

EXITING SHUTDOWN

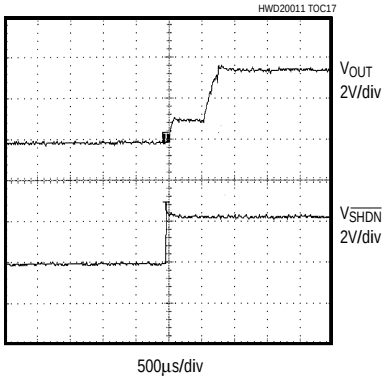

Pin Description

PIN		NAME	FUNCTION
HWD20011 HWD2001	HWD20012		
1	1	FB	Dual-Mode™ Feedback Input. Connect to GND for +5.0V output. Connect to OUT for +3.3V output. Use a resistor network to set the output voltage from +2.0V to +5.5V.
2	2	LBI	Low-Battery Comparator Input. Internally set to trip at +1.30V.
3	3	$\overline{LBO}$	Open-Drain Low-Battery Comparator Output. Connect $\overline{LBO}$ to OUT through a 100kΩ resistor. Output is low when V_{LBI} is <1.3V. $\overline{LBO}$ is high impedance during shutdown.
—	4	CLSEL	Current-Limit Select Input. CLSEL = OUT sets the current limit to 1A. CLSEL = GND sets the current limit to 0.5A.
4	5	REF	1.3V Reference Voltage. Bypass with a 0.1µF capacitor.
5	6	$\overline{SHDN}$	Shutdown Input. Drive high (>80% of V_{OUT}) for operating mode. Drive low (<20% of V_{OUT}) for shutdown mode. Connect to OUT for normal operation.
—	7	BATT	Battery Input and Damping Switch Connection. If damping switch is unused, leave BATT unconnected.
6	8	GND	Ground
7	9	LX	N-Channel and P-Channel Power MOSFET Drain
8	10	OUT	Power Output. OUT provides bootstrap power to the IC.

Detailed Description

The HWD20011/HWD2001/HWD20012 compact, step-up DC-DC converters start up with voltages as low as 0.9V and operate with an input voltage down to 0.7V. Consuming only 16µA of quiescent current, these devices offer a built-in synchronous rectifier that reduces cost by eliminating the need for an external diode and improves overall efficiency by minimizing losses in the circuit (see *Synchronous Rectification* section for details). The internal MOSFET resistance is typically 0.3Ω, which minimizes losses. The current limit of the HWD20011 and HWD2001 are 1A and 0.5A, respectively. The HWD2001's lower current limit allows the use of a physically smaller inductor in space-sensitive applications. The HWD20012 features a circuit that eliminates noise due to inductor ringing. In addition, the HWD20012 offers a selectable current limit (0.5A or 1A) for design flexibility.

PFM Control Scheme

A unique minimum-off-time, current-limited, pulse-frequency-modulation (PFM) control scheme is a key feature of the HWD20011/HWD2001/HWD20012. This scheme combines the high output power and efficiency of a pulse-width-modulation (PWM) device with the ultra-low quiescent current of a traditional PFM (Figure 1). There is no oscillator; a constant-peak-current limit in the switch allows the inductor current to vary between this peak limit and some lesser value. At light loads, the switching frequency is governed by a pair of one-shots that set a typical minimum off-time (1µs) and a typical maximum on-time (4µs). The switching frequency depends upon the load and the input voltage, and can range up to 500kHz. The peak current of the internal N-channel MOSFET power switch is fixed at 1A (HWD20011), at 0.5A (HWD2001), or is selectable (HWD20012). Unlike conventional pulse-skipping DC-DC converters (where ripple amplitude varies with input voltage), ripple in these devices does not exceed the product of the switch current limit and the filter-capacitor equivalent series resistance (ESR).

Synchronous Rectification

The internal synchronous rectifier eliminates the need for an external Schottky diode, thus reducing cost and board space. During the cycle off-time, the P-channel MOSFET turns on and shunts the MOSFET body diode.

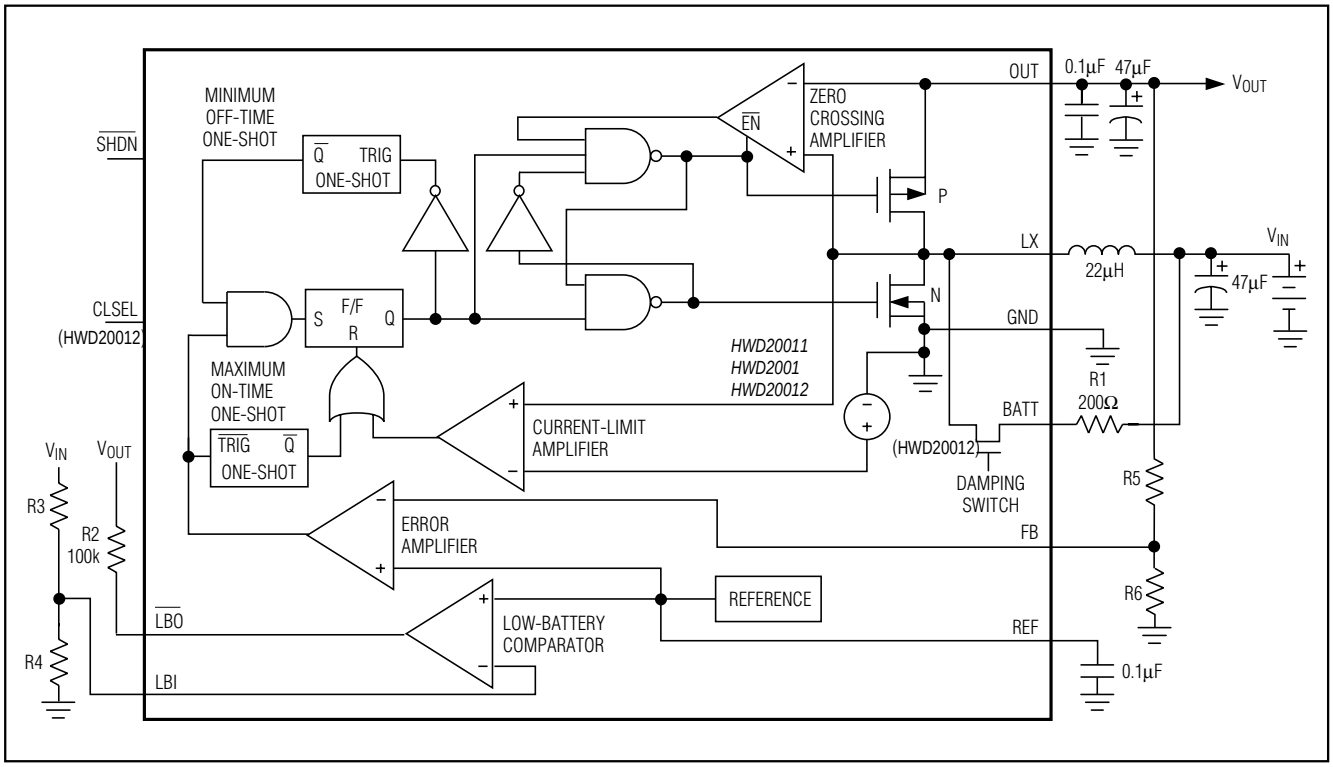

Figure 1. Simplified Functional Diagram

High-Efficiency, Low-Supply-Current, Compact, Step-Up DC-DC Converters

As a result, the synchronous rectifier significantly improves efficiency without the addition of an external component. Conversion efficiency can be as high as 94%, as shown in the *Typical Operating Characteristics*. For low-voltage inputs from single cells (Alkaline, NiCd, or NiMH), use an external Schottky diode such as the 1N5817 to ensure start-up.

Voltage Reference

The voltage at REF is nominally +1.30V. REF can source up to 100µA to external circuits. The reference maintains excellent load regulation (see *Typical Operating Characteristics*). A bypass capacitor of 0.1µF is required for proper operation.

Shutdown

The device enters shutdown when $V_{\overline{SHDN}}$ is low ($V_{\overline{SHDN}}$ <20% of V_{OUT}). For normal operation, drive $\overline{SHDN}$ high ($V_{\overline{SHDN}}$ >80% of V_{OUT}) or connect $\overline{SHDN}$ to OUT. During shutdown, the body diode of the P-channel MOSFET allows current flow from the battery to the output. V_{OUT} falls to approximately V_{IN} - 0.6V and LX remains high impedance. The capacitance and load at OUT determine the rate at which V_{OUT} decays. Shutdown can be pulled as high as 6V, regardless of the voltage at OUT.

Current Limit Select Pin (HWD20012)

The HWD20012 allows a selectable inductor current limit of either 0.5A or 1A. This allows flexibility in designing for higher current applications or for smaller, compact designs. Connect CLSEL to OUT for 1A or to GND for 0.5A. CLSEL draws 1.4µA when connected to OUT.

BATT/Damping Switch (HWD20012)

The HWD20012 is designed with an internal damping switch to minimize ringing at LX. The damping switch connects an external resistor (R1) across the inductor when the inductor's energy is depleted (Figure 2). Normally, when the energy in the inductor is insufficient to supply current to the output, the capacitance and inductance at LX form a resonant circuit that causes ringing. The ringing continues until the energy is dissipated through the series resistance of the inductor. The damping switch supplies a path to quickly dissipate this energy, minimizing the ringing at LX. Damping LX ringing does not reduce V_{OUT} ripple, but does reduce EMI. R1 = 200Ω works well for most applications while reducing efficiency by only 1%. Larger R1 values provide less damping, but have less impact on efficiency. Generally, lower values of R1 are needed to fully damp LX when the V_{OUT}/V_{IN} ratio is high (Figures 2, 3, and 4).

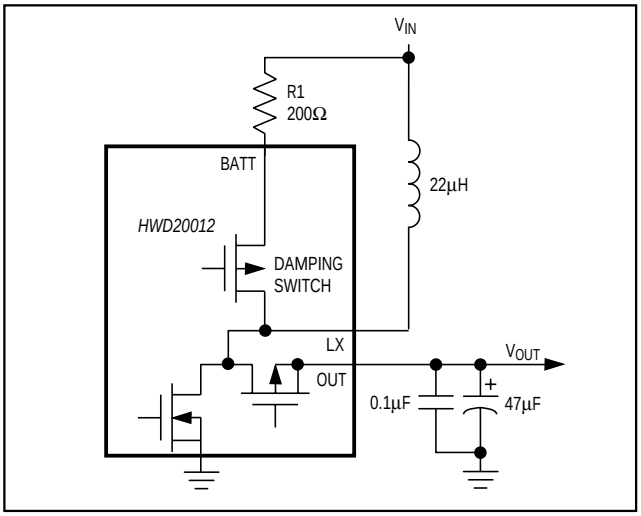

Figure 2. Simplified Diagram of Inductor Damping Switch

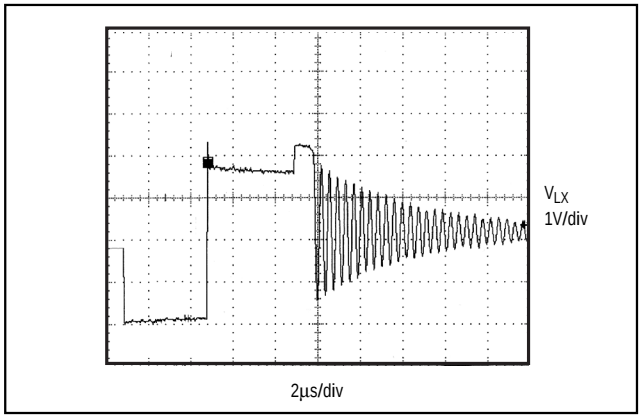

Figure 3. LX Ringing Without Damping Switch

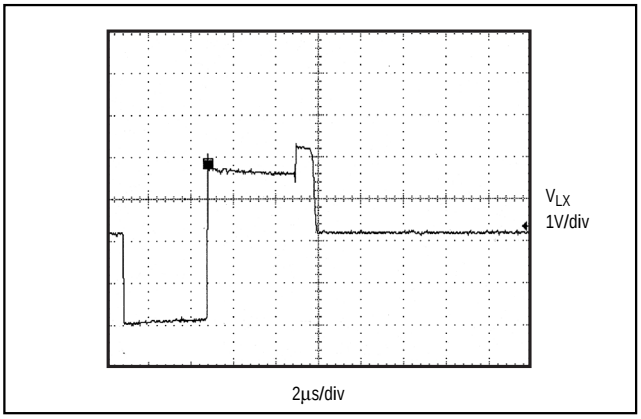

Figure 4. LX Waveform with Damping Switch (with 200Ω external resistor)

Selecting the Output Voltage

V_{OUT} can be set to 3.3V or 5.0V by connecting the FB pin to GND (5V) or OUT (3.3V) (Figures 5 and 6).

To adjust the output voltage, connect a resistor-divider from V_{OUT} to FB to GND (Figure 7). Choose a value less than 260kΩ for R6. Use the following equation to calculate R5:

$$R5 = R6\ [(V_{OUT} / V_{REF}) - 1]$$

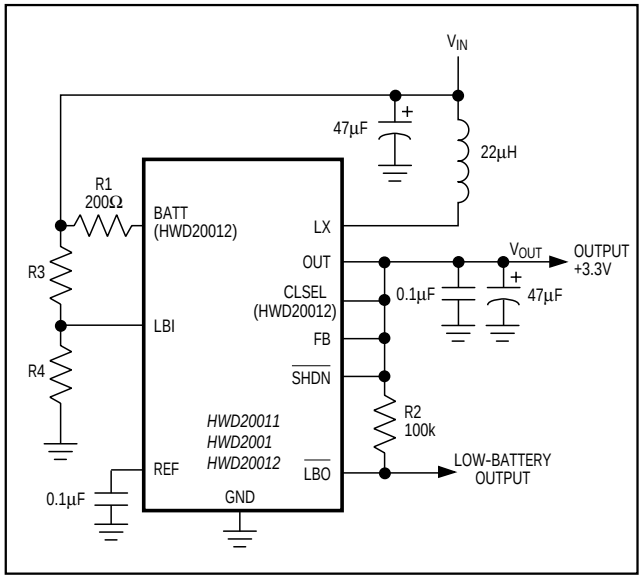

Figure 5. Preset Output Voltage of +3.3V

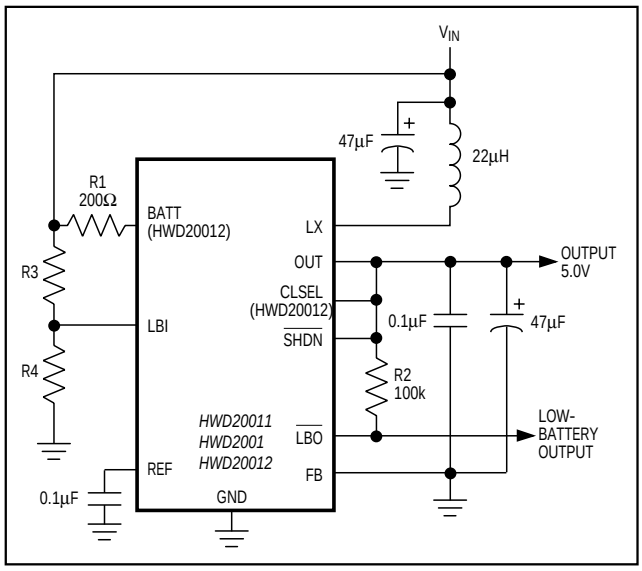

Figure 6. Preset Output Voltage of +5V

where V_{REF} = +1.3V and V_{OUT} may range from 2V to 5V. The input bias current of FB has a maximum value of 50nA which allows large-value resistors (R6 ≤ 260kΩ) to be used.

Low-Battery Detection

The HWD20011/HWD2001/HWD20012 contain an on-chip comparator for low-battery detection. If the voltage at LBI falls below the internal reference voltage (1.30V), $\overline{LBO}$ (an open-drain output) sinks current to GND. The low-battery monitor threshold is set by two resistors, R3 and R4 (Figures 5, 6, and 7). Since the LBI current is less than 50nA, large resistor values (R4 ≤ 260kΩ) can be used to minimize loading of the input supply. Calculate R3 using the following equation:

$$R3 = R4\ [(V_{TRIP} / V_{REF}) - 1]$$

for $V_{TRIP} \geq 1.3V$. V_{TRIP} is the level where the low-battery detector output goes low, and V_{REF} is the internal 1.30V reference. Connect a pull-up resistor of 100kΩ or greater from $\overline{LBO}$ to OUT when driving CMOS circuits. $\overline{LBO}$ is an open-drain output, and can be pulled as high as 6V regardless of the voltage at OUT. When LBI is above the threshold, the $\overline{LBO}$ output is high impedance. If the low-battery comparator is not used, ground

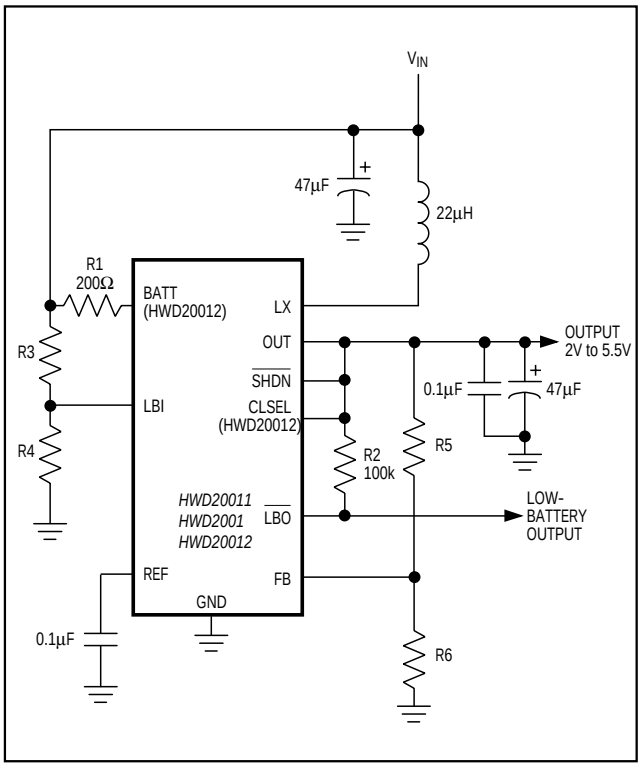

Figure 7. Setting an Adjustable Output

High-Efficiency, Low-Supply-Current, Compact, Step-Up DC-DC Converters

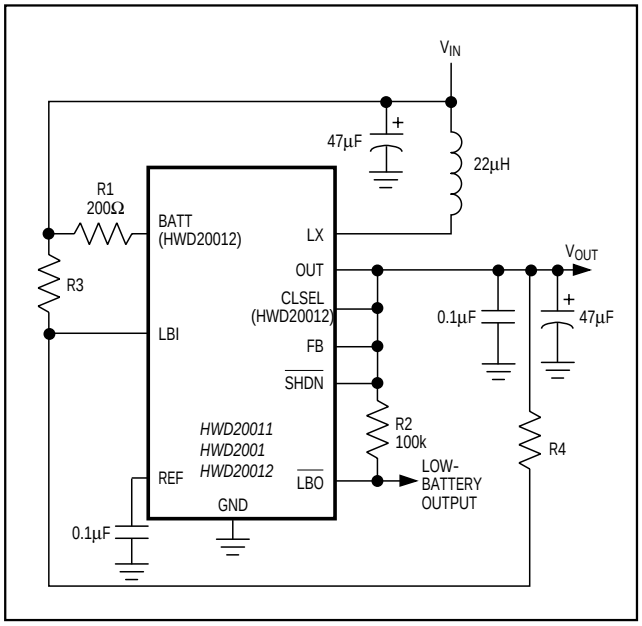

Figure 8. Setting Resistor Values for the Low-Battery Indicator when V_{IN} < 1.3V

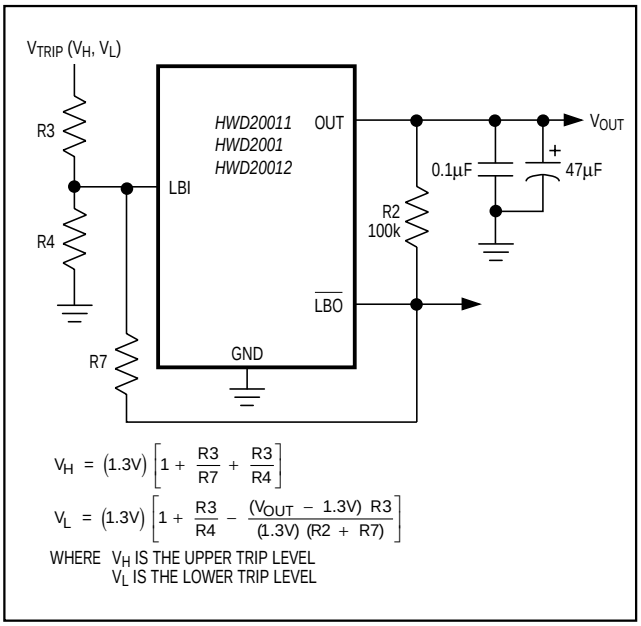

Figure 9. Adding External Hysteresis to the Low-Battery Indicator

LBI and $\overline{LBO}$. For V_{TRIP} less than 1.3V, configure the comparator as shown in Figure 8. Calculate the value of the external resistors R3 and R4 as follows:

$$R3 = R4(V_{REF} - V_{TRIP}) / (V_{OUT} - V_{REF})$$

Since the low-battery comparator is noninverting, external hysteresis can be added by connecting a resistor between $\overline{LBO}$ and LBI as shown in Figure 9. When $\overline{LBO}$ is high, the series combination of R2 and R7 source current into the LBI summing junction.

Applications Information

Inductor Selection

An inductor value of 22µH performs well in most applications. The HWD20011/HWD2001/HWD20012 will also work with inductors in the 10µH to 47µH range. Smaller inductance values typically offer a smaller physical size for a given series resistance, allowing the smallest overall circuit dimensions. However, due to higher peak inductor currents, the output voltage ripple (I_{PEAK} x output filter capacitor ESR) also tends to be higher. Circuits using larger inductance values exhibit higher output current capability and larger physical dimensions for a given series resistance. The inductor's incremental saturation current rating should be greater than the peak switch-current limit, which is 1A for the HWD20011, 500mA for the HWD2001, and 1A or 0.5A for the HWD20012. However, it is generally acceptable to bias the inductor into saturation by as much as 20%, although this will slightly reduce efficiency. Table 1 lists suggested components.

The inductor's DC resistance significantly affects efficiency. See Table 2 for a comparison of inductor specifications. Calculate the maximum output current as follows:

$$I_{OUT(MAX)} = \frac{V_{IN}}{V_{OUT}}\left[I_{LIM} - t_{OFF}\left(\frac{V_{OUT} - V_{IN}}{2 \times L}\right)\right]\eta$$

where $I_{OUT(MAX)}$ = maximum output current in amps

V_{IN} = input voltage

L = inductor value in µH

η = efficiency (typically 0.9)

t_{OFF} = LX switch's off-time in µs

I_{LIM} = 0.5A or 1.0A

Table 1. Suggested Components

PRODUCTION METHOD	INDUCTORS	CAPACITORS	RECTIFIERS (OPTIONAL)
Surface Mount	Sumida CD43 series Sumida CD54 series Coilcraft DT1608C Coilcraft DO1608C Coiltronics Uni-PAC Murata LQH4 series	Sprague 593D series Sprague 595D series AVX TPS series ceramic	Motorola MBR0530 Nihon EC 15QS02L
Miniature Through-Hole	Sumida RCH654-220	Sanyo OS-CON series	—

Table 2. Surface-Mount Inductor Specifications

MANUFACTURER PART NUMBER	µH	Ω (max)	I_{PEAK} (A)	HEIGHT (mm)
Coilcraft DT1608C-103	10	0.095	0.7	2.92
Coilcraft DO1608C-153	15	0.200	0.9	2.92
Coilcraft DO1608C-223	22	0.320	0.7	2.92
Coiltronics UP1B-100	10	0.111	1.9	5.0
Coiltronics UP1B-150	15	0.175	1.5	5.0
Coiltronics UP1B-220	22	0.254	1.2	5.0
Murata LQH4N100	10	0.560	0.4	2.6
Murata LQH4N220	22	0.560	0.4	2.6
Sumida CD43-8R2	8.2	0.132	1.26	3.2
Sumida CD43-100	10	0.182	1.15	3.2
Sumida CD54-100	10	0.100	1.44	4.5
Sumida CD54-180	18	0.150	1.23	4.5
Sumida CD54-220	22	0.180	1.11	4.5

Table 3. Component Suppliers

COMPANY	PHONE	FAX
AVX	USA (803) 946-0690	USA (803) 626-3123
Coilcraft	USA (847) 639-6400	USA (847) 639-1469
Coiltronics	USA (561) 241-7876	USA (561) 241-9339
Motorola	USA (303) 675-2140 (800) 521-6274	USA (303) 675-2150
Murata	USA (814) 237-1431 (800) 831-9172	USA (814) 238-0490
Nihon	USA (805) 867-2555 Japan 81-3-3494-7411	USA (805) 867-2556 Japan 81-3-3494-7414
Sanyo	USA (619) 661-6835 Japan 81-7-2070-6306	USA (619) 661-1055 Japan 81-7-2070-1174
Sprague	USA (603) 224-1961	USA (603) 224-1430
Sumida	USA (647) 956-0666 Japan 81-3-3607-5111	USA (647) 956-0702 Japan 81-3-3607-5144
Taiyo Yuden	USA (408) 573-4150	USA (408) 573-4159

Capacitor Selection

A 47µF, 10V surface-mount tantalum (SMT) output filter capacitor provides 80mV output ripple when stepping up from 2V to 5V. Smaller capacitors (down to 10µF with higher ESRs) are acceptable for light loads or in applications that can tolerate higher output ripple. Values in the 10µF to 100µF range are recommended. The equivalent series resistance (ESR) of both bypass and filter capacitors affects efficiency and output ripple. Output voltage ripple is the product of the peak inductor current and the output capacitor ESR. Use low-ESR capacitors for best performance, or connect two or more filter capacitors in parallel. Low-ESR, SMT tantalum capacitors are currently available from Sprague (595D series) AVX (TPS series) and other sources. Ceramic surface-mount and Sanyo OS-CON organic-semiconductor through-hole capacitors also exhibit very low ESR, and are especially useful for operation at cold temperatures. See Table 3 for a list of suggested component suppliers.

High-Efficiency, Low-Supply-Current, Compact, Step-Up DC-DC Converters

Optional External Rectifier

Although not required, a Schottky diode (such as the MBR0520) connected between LX and OUT allows lower start-up voltages (Figure 10) and is recommended when operating at input voltages below 1.3V. Note that adding this diode provides no significant efficiency improvement.

PC Board Layout and Grounding

Careful printed circuit layout is important for minimizing ground bounce and noise. Keep the IC's GND pin and the ground leads of the input and output filter capacitors less than 0.2in (5mm) apart. In addition, keep all connections to the FB and LX pins as short as possible. In particular, when using external feedback resistors, locate them as close to the FB as possible. To maximize output power and efficiency and minimize output ripple voltage, use a ground plane and solder the IC's GND directly to the ground plane.

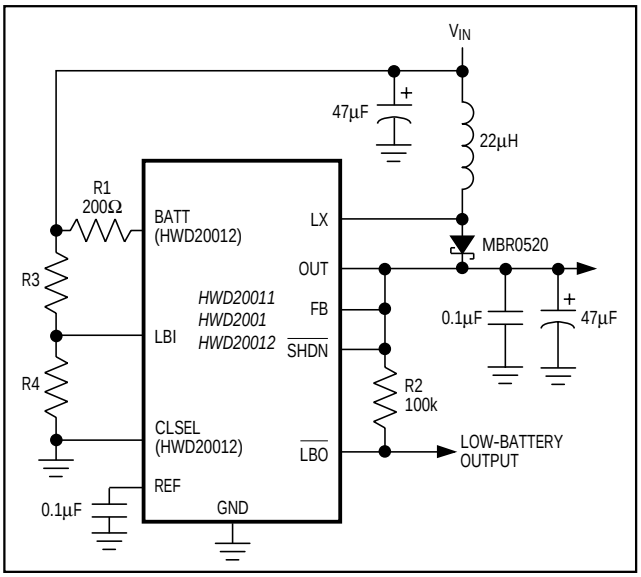

Figure 10. Adding a Schottky Diode for Low Input Voltage Operation

Chip Information

TRANSISTOR COUNT: 751

Package Information

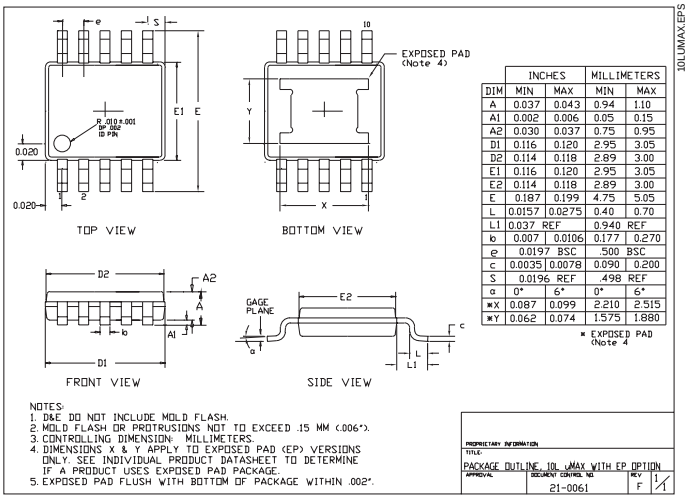

DIM	INCHES MIN	INCHES MAX	MILLIMETERS MIN	MILLIMETERS MAX
A	0.037	0.043	0.94	1.10
A1	0.002	0.006	0.05	0.15
A2	0.030	0.037	0.75	0.95
D1	0.116	0.120	2.95	3.05
D2	0.114	0.118	2.89	3.00
E1	0.116	0.120	2.95	3.05
E2	0.114	0.118	2.89	3.00
E	0.187	0.199	4.75	5.05
L	0.0157	0.0275	0.40	0.70
L1	0.037 REF		0.940 REF	
b	0.007	0.0106	0.177	0.270
e	0.0197 BSC		.500 BSC	
c	0.0035	0.0078	0.090	0.200
S	0.0196 REF		.498 REF	
α	0°	6°	0°	6°
*X	0.087	0.099	2.210	2.515
*Y	0.062	0.074	1.575	1.880

* EXPOSED PAD (Note 4)


HWD
R
csMsc