CONNOR–WINFIELD CORPORATION

AURORA, IL. 60505

PHONE (630) 851–4722

FAX (630) 851–5040

HIGH FREQUENCY VCXO WITH TRI–STATE

SPECIFICATIONS			HVT51–100	HVT51–150	HVT51–200
Frequency Range (Fo)			30MHz to 100MHz	30MHz to 100MHz	30MHz to 65MHz
Frequency Stability (Voltage Control= 2.50Vdc)					
	Vs Temperature		±25ppm		
	Vs Calibration @25°C		±20ppm		
	Vs Aging (15yrs)		±10ppm		
	Total Frequency Tolerance		±55ppm Maximum (Referenced to Fo)		
Temperature Range			0°C to +70°C		
Output	Waveform		CMOS Squarewave, TTL Compatible		
	Load		50pF Maximum		
	Voltage	Voh	4.5V Minimum		
		Vol	0.5V Maximum		
	Current	Ioh	−16mA		
		Iol	16mA		
	Duty Cycle		40/60 Maximum		
	Rise/Fall Time		3nS Maximum		
	Jitter (RMS)		5pS Maximum		
	SSB Phase Noise (Typical)		−65dBc/Hz @ 10Hz , −130dBc/Hz @10KHz		
Frequency Control					
	Pullability @25°C (Referenced to Fo)		±50ppm Minimum	±75ppm Minimum	±100ppm Minimum
	Absolute Pull Range		±15ppm Minimum	±40ppm Minimum	±65ppm Minimum
	Slope		Positive Transfer Characteristic		
	Control Voltage		0.5Vdc to 4.5Vdc		
	Monotonic Linearity		< ±10%		
	Input Impedance		⩾ 50K ohms		
	Modulation Bandwidth		⩾ 15KHz		
Input (Tri–State Enble/Disable Function)	Output E/D Time		100nS Maximum		
	Enable	Vih	2.0V Minimum – Output Active		
	Disable	Vil	0.8V Maximum – Ouput High Impedance		
	No connection		Ouput is enabled with no connection on pin 3		
Supply Voltage (Vcc)			+5Vdc ±5%		
Supply Current			50mA Max <50MHz , 70mA Max <100MHz		
Package			All metal, hermetically sealed, welded package		

WARNING! Do not insert oscillator into a hot circuit. Failure to comply will result in damage to oscillator.

Specifications subject to change without notice

CONNOR–WINFIELD CORPORATION

AURORA, IL. 60505

PHONE (630) 851–4722

FAX (630) 851–5040

14 PIN VCXO OSCILLATOR

EXAMPLE MODEL NUMBER:

H V T 5 1 – 1 0 0 / 4 4 . 7 3 6 M H z

- H V T 5 1 — VCXO SERIES
- 1 0 0 — MINIMUM DEVIATION OF ±50ppm FROM 0.5 TO 4.5Vdc CONTROL VOLTAGE.
- 4 4 . 7 3 6 M H z — CENTER FREQUENCY

TEST CIRCUIT

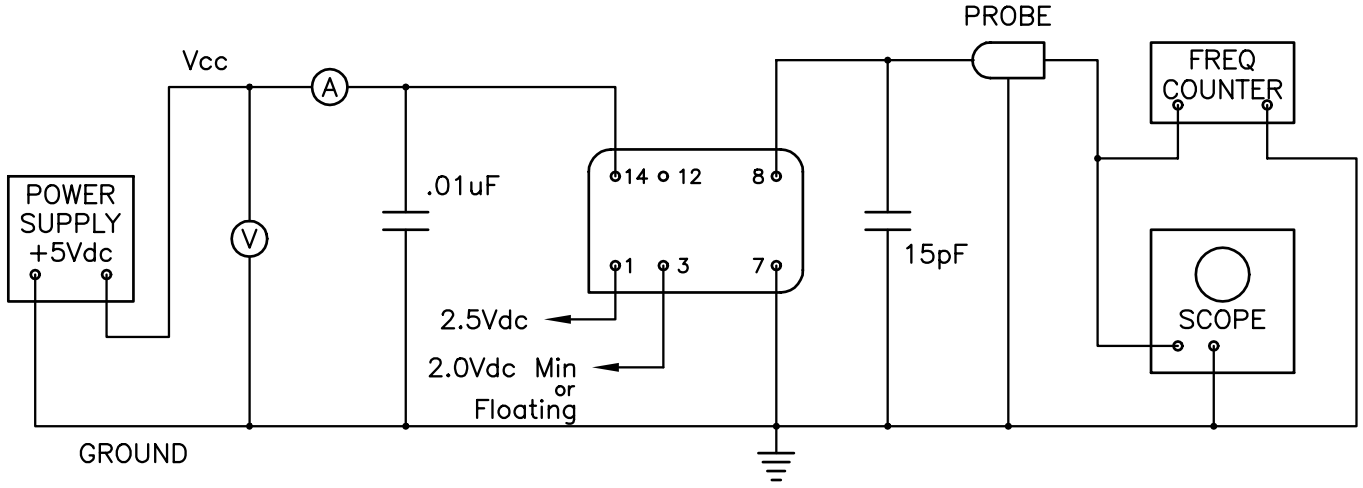

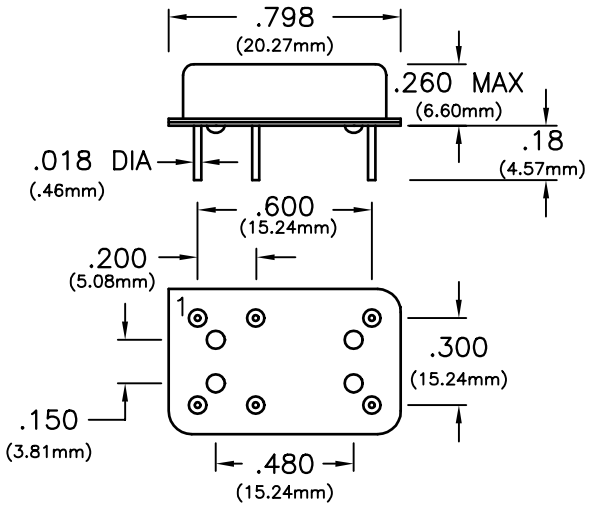

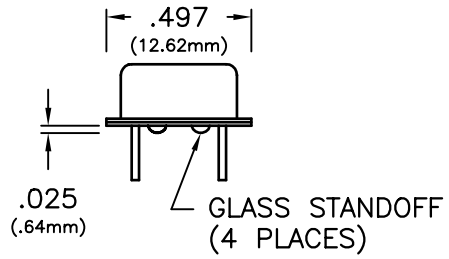

PIN	CONNECTION
1	CONTROL VOLTAGE
3	TRI–STATE VOLTAGE
7	GROUND (CASE)
8	OUTPUT
12	NO CONNECTION
14	Vcc

Specifications subject to change without notice