HVP-20

0.75A 20kV--High voltage silicon rectifier stack

HVGT High voltage silicon rectifier is made of high quality glass passivated chip and high reliability epoxy resin sealing structure, and through professional testing equipment inspection qualified after to customers.

FEATURES:

1. High reliability design.
2. High voltage design.
3. Power frequency ratio.
4. Conform to RoHS and SGS.
5. Epoxy resin molded in vacuumHave anticorrosion in the surface.

APPLICATIONS:

1. Ignition device power supply.
2. Microwave emission power.
3. General purpose high voltage rectifier.

MECHANICAL DATA:

1. Case: epoxy resin molding.
2. Terminal: external lead.
3. Net weight:35 grams (approx).

SHAPE DISPLAY:



SIZE: (Unit:mm) **HVGT NAME: HVP**

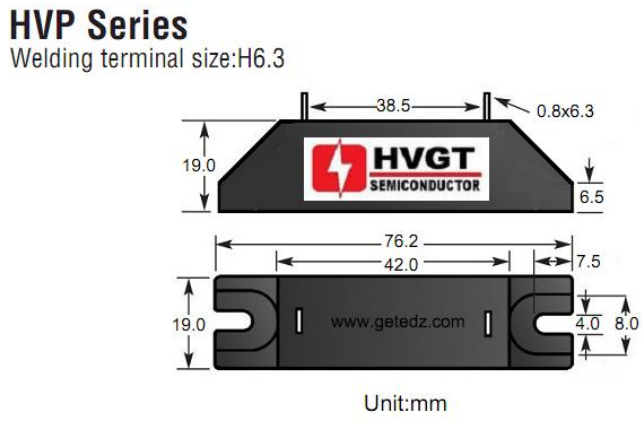

MAXIMUM RATINGS AND CHARACTERISTICS: (Absolute Maximum Ratings)

Items	Symbols	Condition	Data Value	Units
Repetitive Peak Renerse Voltage	V_{RRM}	Ta=25°C;	20	kV
Average Output Current	I_F	Ta=25°C;Resistive Load	750	mA
Suege Current	I_{FSM}	Ta=25°C;8.3 mS	50	A
Junction Temperature	T_J		-40~+125	°C
Allowable Operation Case Temperature	Tc		125	°C
Storage Temperature	T_{STG}		-40~+125	°C

ELECTRICAL CHARACTERISTICS: Ta=25°C (Unless otherwise specified)

Items	Symbols	Condition	Data value	Units
Maximum Forward Voltage Drop	V_F	at 25°C;I_F =$I_{F(AV)}$	22	V
Maximum Reverse Current	I_R1	at 25°C;V_R =V_{RRM}	5.0	uA
	I_R2	at 100°C;V_R =V_{RRM}	100	uA
Maximum Reverse Recovery Time	T_{RR}	at 25°C; I_F=0.5I_R; I_R=I_{FAVM}; I_{RR}=0.25I_R	--	nS
Junction Capacitance	C_J	at 25°C; V_R=0V; f=1MHz	--	pF

Downloaded from alldatasheet.com