HVP-16 High Voltage Silicon Stack



FEATURES

- Low leakage current, low power
- Prevent instantaneous large current impact
- Heat conduction performance, efficient heat dissipation design.
- General and different shapes and sizes to choose or custom.
- In the circuit in high voltage rectifier, isolation, protection .

DEVICE ELECTRICAL CHARACTERISTICS (25℃Cambient temperature unless stated otherwise)	CONDITIONS	SYMBOL	HVP-16
Repetitive Peak Reverse Voltage	T_a=25℃ I_R=0.5μA	V_{RRM}	16KV
Peak Working Reverse Voltage	T_a=25℃ I_R=0.5μA	V_{RWM}	16KV
Non-Repetitive Peak Reverse Voltage	T_a=25℃ I_R=0.5μA	V_{RSW}	17.6KV
Allowable Junction Temperature		T_j	120℃
Storage Temperature Range		T_{stg}	-40~120℃
Average Forward Current	Sinewave50Hz,Resistion Load T_{break}=75℃	I_o	1.0A
Forward (Non-Repetitive) Surge Current	Sinewave Reverse Recovery Time 0.01S 50Hz	I_{FSM}	50A
Maximum Reverse Current	V_R=V_{RRM} , T_a= 25 ℃	I_{R1}	5.0μA
Maximum Reverse Current	V_R=V_{RRM} , T_a=100℃	I_{R2}	50.0μA
Maximum Forward Voltage Drop	I_F=1.0A	V_F	24.0V

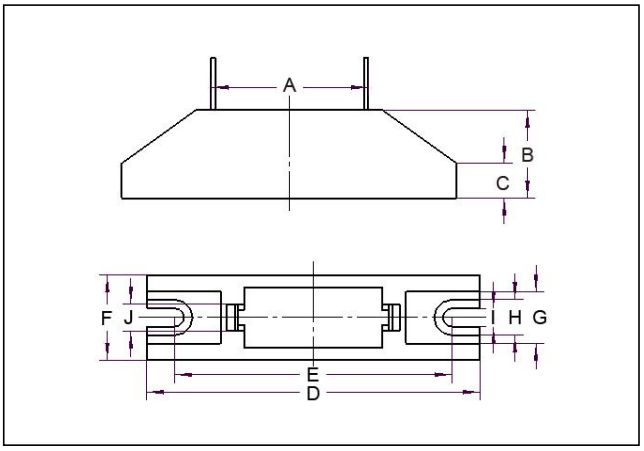

SYMBOL	HVP-16 (Unit:mm)
A	36.2
B	20.1
C	8
D	77
E	64
F	19.6
G	12
H	8.2
I	4.2
J	6.2

Sales and service: leadsun@hv-semi.com
sureshang@hotmail.com
Sales hotline: 86-412-2666636
Leadsun Electronics

Download from alldatasheet.com