150W Single Output LED Power Supply — HVGC-150 series



■ Features :

- Constant current design
- Wide input range 180~528VAC
- Built-in active PFC function
- High efficiency up to 91%
- Protections: Short circuit / Over voltage / Over temperature
- Cooling by free air convection
- OCP point adjustable through output cable or internal potentiometer
- IP67 / IP65 design for indoor or outdoor installations
- Three in one dimming function (0~10Vdc or 10V PWM signal or resistance)
- Suitable for LED lighting and street lighting applications
- Compliance to worldwide safety regulations for lighting
- Suitable for dry / damp / wet locations
- 5 years warranty (Note.6)

IP65 IP67

HVGC-150-350[A] A : IP65 rated. Constant current level can be adjusted through internal potentiometer.
B : IP67 rated. Constant current level adjustable through output cable with 0~10Vdc or 10V PWM signal or resistance.
D (option) : IP67 rated. Timer dimming function, contact MEAN WELL for details.

SPECIFICATION

MODEL		HVGC-150-350□	HVGC-150-500□	HVGC-150-700□	HVGC-150-1050□	HVGC-150-1400□
OUTPUT	RATED CURRENT	350mA	500mA	700mA	1050mA	1400mA
	CURRENT ACCURACY	±5.0%				
	MAX. OUTPUT VOLTAGE	42 ~ 428V	30 ~ 300V	21 ~ 215V	15 ~ 143V	12 ~ 107V
	RATED POWER	149.8W	150W	150.5W	150.15W	149.8W
	RIPPLE & NOISE (max.) Note.2	2Vp-p	1.5Vp-p	1Vp-p	0.7Vp-p	0.5Vp-p
	CURRENT ADJ. RANGE	Can be adjusted by internal potentiometer A type only				
		210 ~ 350mA	300 ~ 500mA	420 ~ 700mA	630 ~ 1050mA	840 ~ 1400mA
	SETUP, RISE TIME	2700ms, 150ms at full load 480VAC / 347VAC ; B type 5000ms, 150ms at 95% load 480VAC / 347VAC				
	HOLD UP TIME (Typ.)	18ms at full load 480VAC / 347VAC				
INPUT	VOLTAGE RANGE Note.3	180 ~ 528VAC 254VDC ~ 747VDC				
	FREQUENCY RANGE	47 ~ 63Hz				
	POWER FACTOR (Typ.)	PF≧0.98/230VAC, PF≧0.97/277VAC, PF≧0.95/347VAC, PF≧0.93/480VAC at full load (Please refer to "Power Factor Characteristic" curve)				
	EFFICIENCY (Typ.)	91%	91%	91%	90%	90%
	AC CURRENT (Typ.)	0.5A / 347VAC 0.38A / 480VAC				
	INRUSH CURRENT (Typ.)	COLD START 35A(t_{width}=790μs measured at 50% I_{peak}) at 480VAC				
	LEAKAGE CURRENT	<0.75mA / 480VAC				
PROTECTION	SHORT CIRCUIT	Constant current limiting, recovers automatically after fault condition is removed				
	OVER VOLTAGE	430 ~ 460V	316 ~ 346V	226 ~ 247V	151 ~ 165V	113 ~ 124V
		Protection type : Shut down o/p voltage with auto-recovery or re-power on to recovery				
	OVER TEMPERATURE	95℃ ±10℃ (RTH2)				
		Protection type : Shut down o/p voltage, recovers automatically after temperature goes down				
ENVIRONMENT	WORKING TEMP.	-40 ~ +70℃ (Refer to "Derating Curve")				
	WORKING HUMIDITY	20 ~ 95% RH non-condensing				
	STORAGE TEMP., HUMIDITY	-40 ~ +80℃, 10 ~ 95% RH				
	TEMP. COEFFICIENT	±0.03%/℃ (0 ~ 60℃)				
	VIBRATION	10 ~ 500Hz, 5G 12min./1cycle, period for 72min. each along X, Y, Z axes				
SAFETY & EMC	SAFETY STANDARDS Note.4	UL8750, CSA C22.2 No. 250.0-08, TUV EN61347-1, EN61347-2-13, IP65 or IP67 approved				
	WITHSTAND VOLTAGE	I/P-O/P:3.75KVAC I/P-FG:2KVAC O/P-FG:0.5KVAC				
	ISOLATION RESISTANCE	I/P-O/P, I/P-FG, O/P-FG:100M Ohms / 500VDC / 25℃/ 70% RH				
	EMC EMISSION	Compliance to EN55015, EN61000-3-2 Class C (≧50% load) ; EN61000-3-3, FCC part 15 class B				
	EMC IMMUNITY	Compliance to EN61000-4-2,3,4,5,6,8,11, EN61547, light industry level (surge 4KV), criteria A				
OTHERS	MTBF	179.5K hrs min. MIL-HDBK-217F (25℃)				
	DIMENSION	245*68*38.8mm (L*W*H)				
	PACKING	1.24Kg; 12pcs/15.9Kg/0.78CUFT				

NOTE

1. All parameters NOT specially mentioned are measured at 347VAC input, rated load and 25℃ of ambient temperature.
2. Ripple & noise are measured at 20MHz of bandwidth by using a 12" twisted pair-wire terminated with a 0.1uf parallel capacitor.
3. Derating may be needed under low input voltages. Please check the static characteristics for more details.
4. Safety and EMC design refer to EN60598-1, CNS15233, GB7000.1.
5. The power supply is considered as a component that will be operated in combination with final equipment. Since EMC performance will be affected by the complete installation, the final equipment manufacturers must re-qualify EMC Directive on the complete installation again.
6. Refer to warranty statement.

■ Mechanical Specification

Case No.994 Unit:mm

A Type:(HVGC-150-_A)

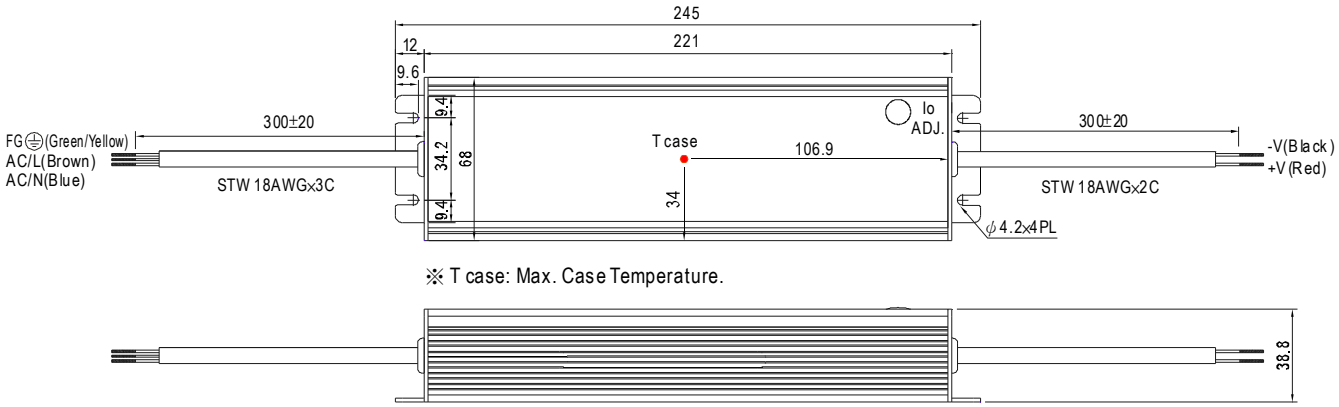

※ T case: Max. Case Temperature.

※ IP65 rated. Constant current level can be adjusted through internal potentiometer.
(Can access by removing the rubber stopper on the case.)

B Type:(HVGC-150-_B)

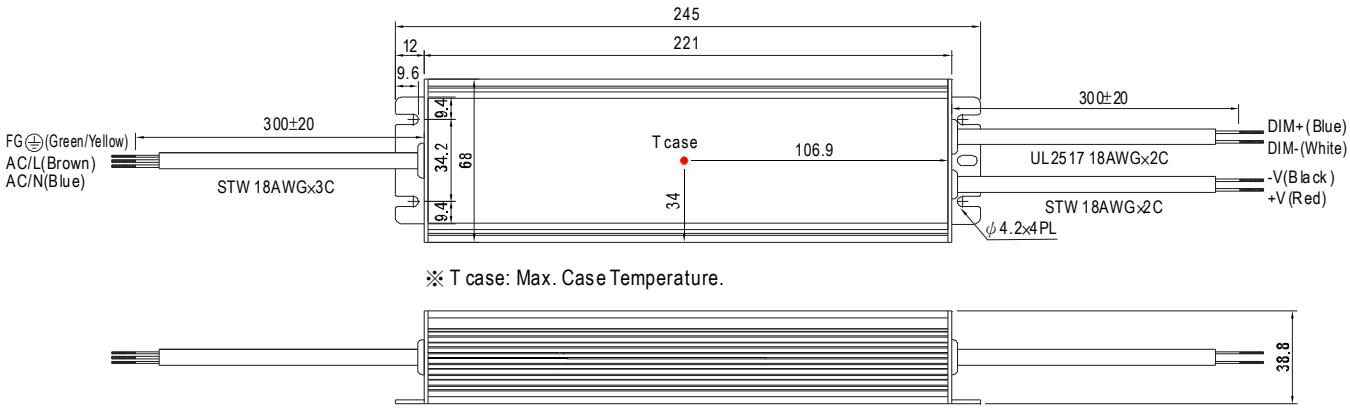

※ T case: Max. Case Temperature.

D Type(option):(HVGC-150-_D)

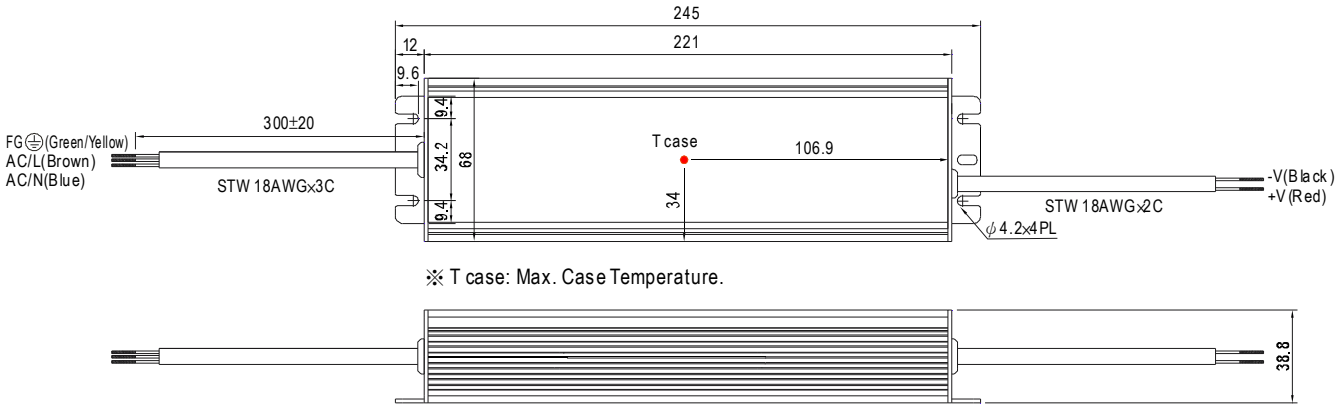

※ T case: Max. Case Temperature.

※ IP67 rated. Timer dimming function, contact MEAN WELL for details.

■ Block Diagram

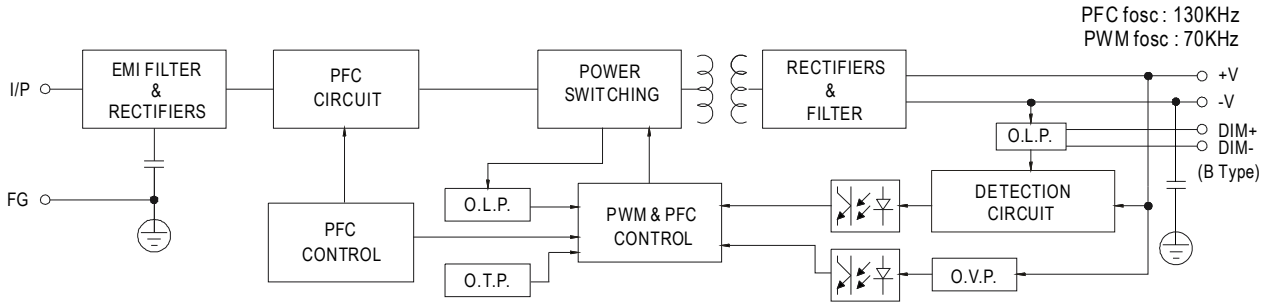

■ Derating Curve

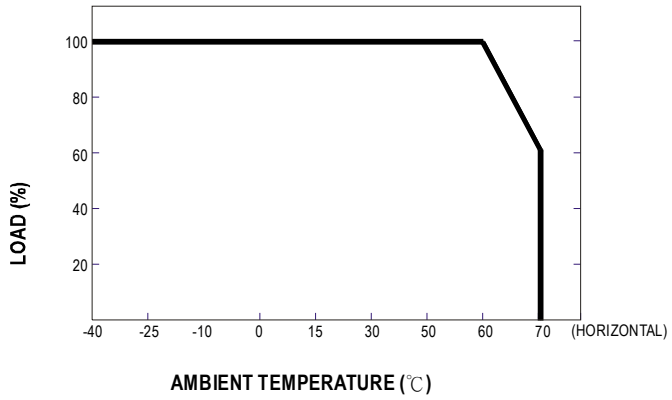

■ Static Characteristics

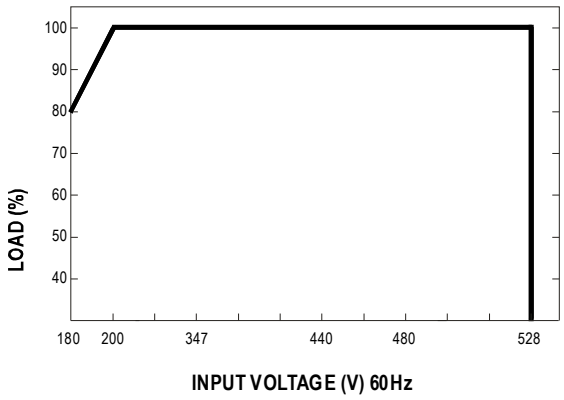

■ Power Factor Characteristic

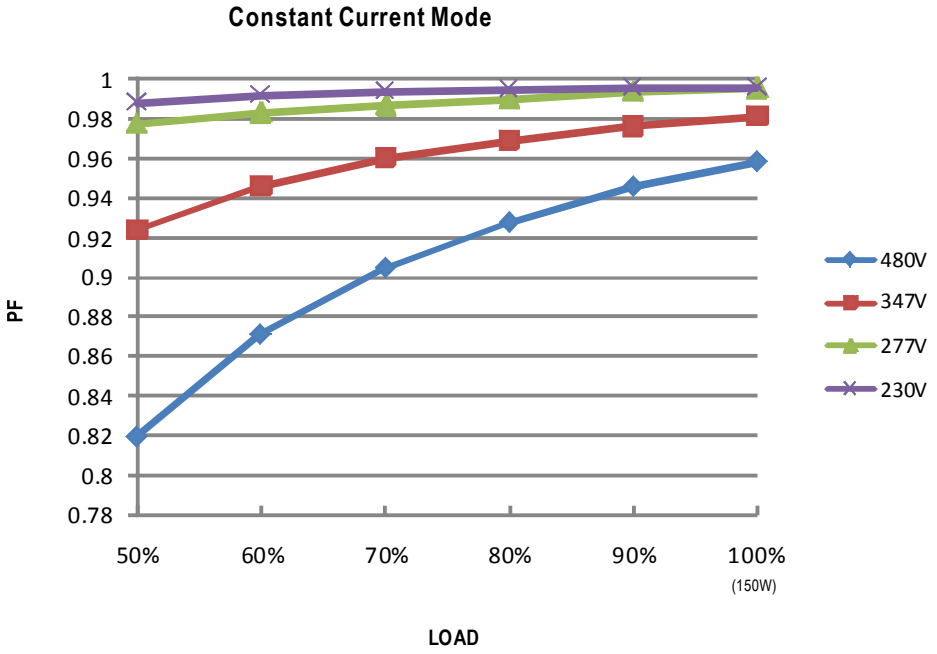

■ EFFICIENCY vs LOAD (HVGC-150-350 Model)

HVGC-150 series possess superior working efficiency that up to 91% can be reached in field applications.

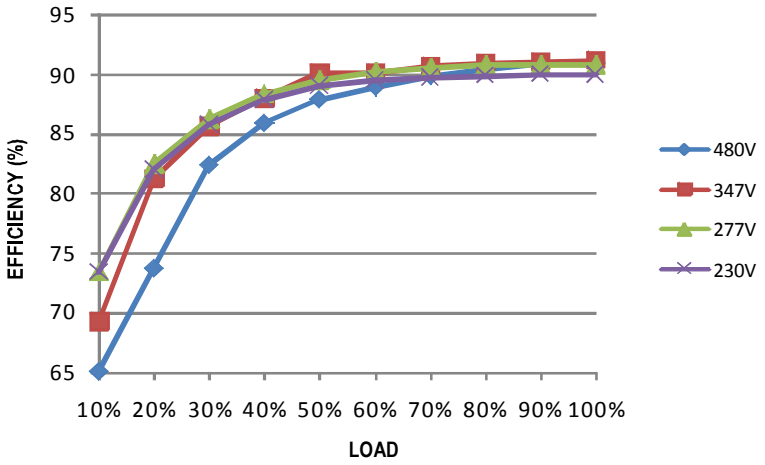

■ DRIVING METHODS OF LED MODULE

A typical LED power supply may work in "constant current mode (CC)" to drive the LEDs.
Mean Well's LED power supply with CC characteristic can be operated at CC mode (direct drive).

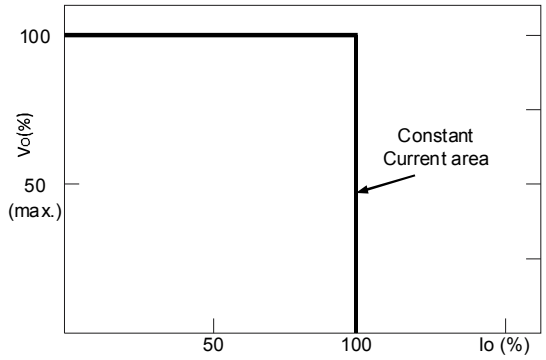

Typical LED power supply I-V curve

■ DIMMING OPERATION

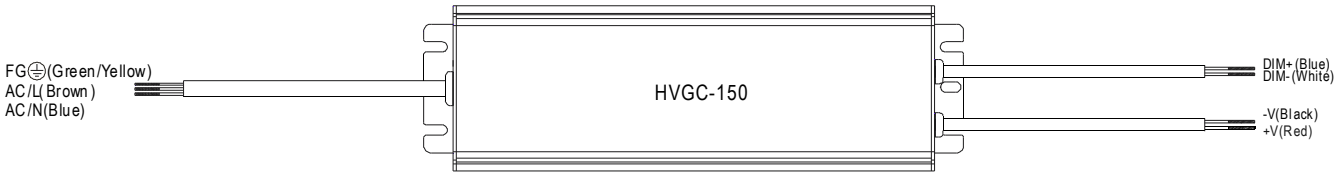

※ Built-in 3 in 1 dimming function, IP67 rated. Output constant current level can be adjusted through output cable by connecting a resistance or 0 ~ 10Vdc or 10V PWM signal between DIM+ and DIM-.

※ Please DO NOT connect "DIM-" to "-V".

※ Reference resistance value for output current adjustment (Typical)

Resistance value												
	Single driver	Short	10KΩ	20KΩ	30KΩ	40KΩ	50KΩ	60KΩ	70KΩ	80KΩ	90KΩ	100KΩ	OPEN
	Multiple drivers (N=driver quantity for synchronized dimming operation)	Short	10KΩ/N	20KΩ/N	30KΩ/N	40KΩ/N	50KΩ/N	60KΩ/N	70KΩ/N	80KΩ/N	90KΩ/N	100KΩ/N	-----
Percentage of rated current		0%	10%	20%	30%	40%	50%	60%	70%	80%	90%	100%	95%~108%

※ 0 ~ 10V dimming function for output current adjustment (Typical)

Dimming value	0V	1V	2V	3V	4V	5V	6V	7V	8V	9V	10V	OPEN
Percentage of rated current	0%	10%	20%	30%	40%	50%	60%	70%	80%	90%	100%	95%~108%

※ 10V PWM signal for output current adjustment (Typical): Frequency range :100Hz ~ 3KHz

Duty value	0%	10%	20%	30%	40%	50%	60%	70%	80%	90%	100%	OPEN
Percentage of rated current	0%	10%	20%	30%	40%	50%	60%	70%	80%	90%	100%	95%~108%

■ WATERPROOF CONNECTION

◎ Waterproof connector

Waterproof connector can be assembled on the output cable of HVGC-150 to operate in dry/wet/damp or outdoor environment.

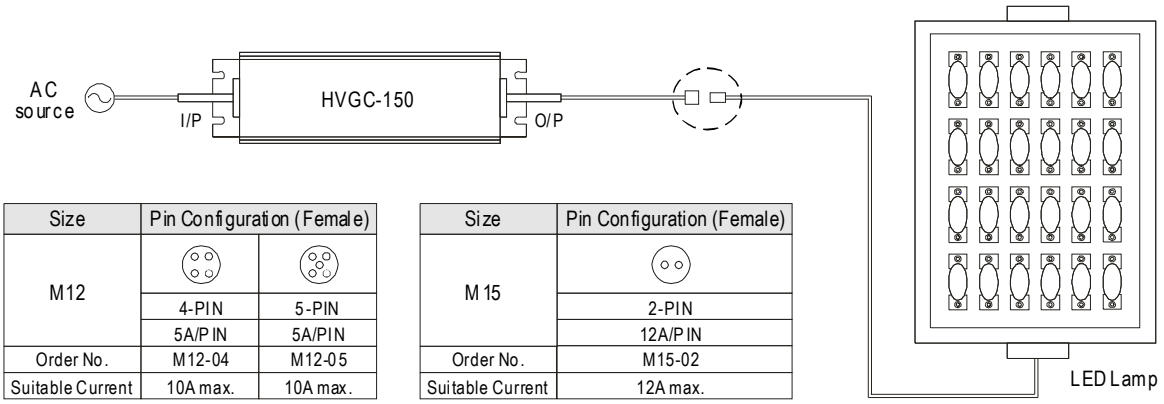

Size	Pin Configuration (Female)	
M12		
	4-PIN	5-PIN
	5A/PIN	5A/PIN
Order No.	M12-04	M12-05
Suitable Current	10A max.	10A max.

Size	Pin Configuration (Female)
M15	
	2-PIN
	12A/PIN
Order No.	M15-02
Suitable Current	12A max.

◎ **Cable Joiner**

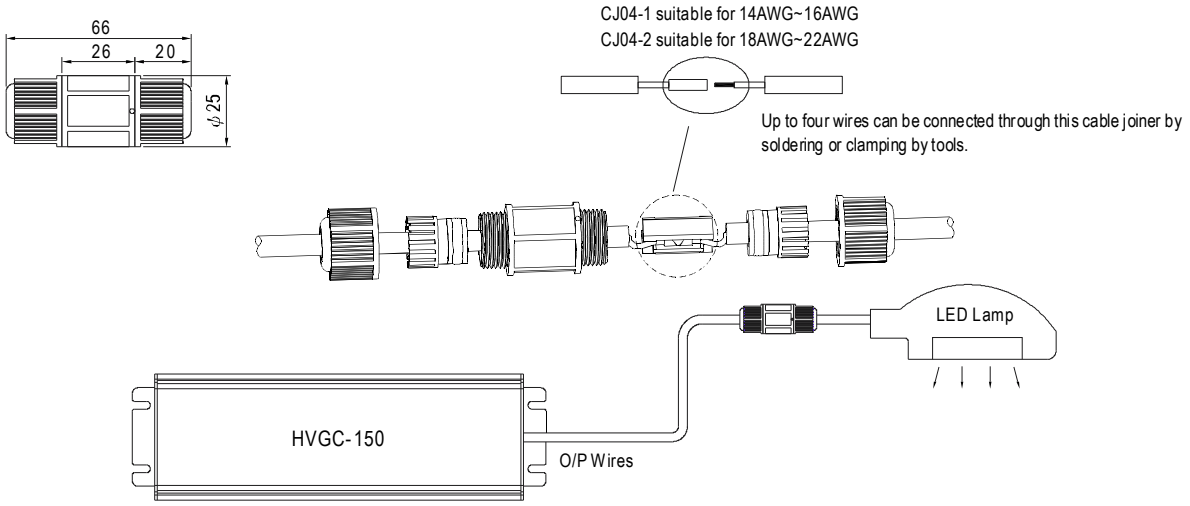

※CJ04 cable joiner can be purchased independently for user's own assembly.
MEAN WELL order No. : CJ04-1, CJ04-2.

◎ **Junction Box(Option)**

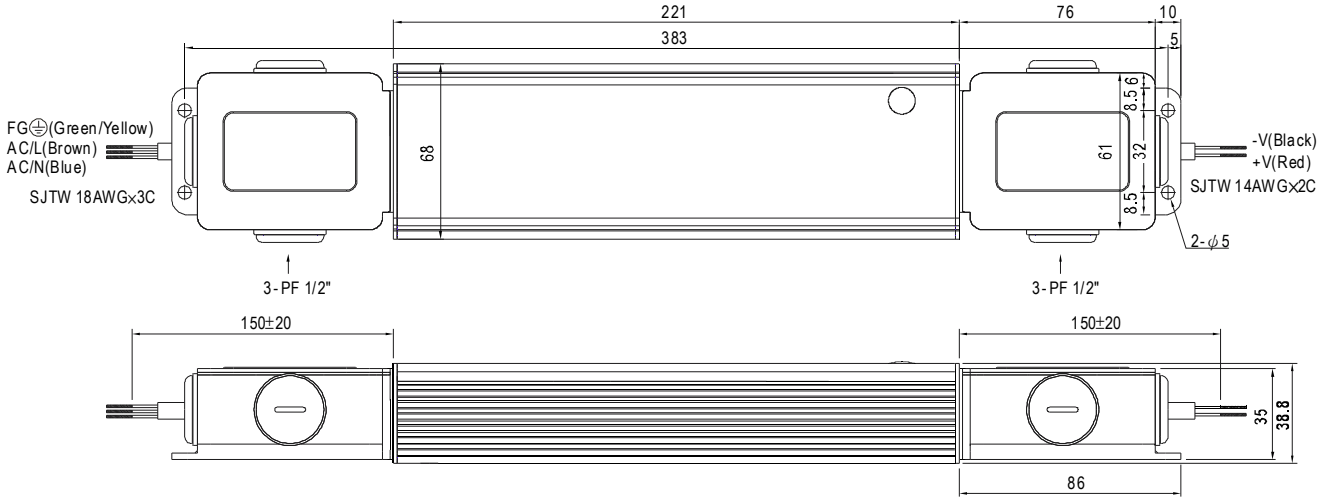

※Optional junction box available for A - type, please contact MEAW WELL for details.

Mouser Electronics

Authorized Distributor

Click to View Pricing, Inventory, Delivery & Lifecycle Information:

Mean Well:

HVGC-150-1050A HVGC-150-1050B HVGC-150-1400A HVGC-150-1400B HVGC-150-350A HVGC-150-350B HVGC-150-500A HVGC-150-500B HVGC-150-700A HVGC-150-700B